STARION

Service Manual 1987

Volume — 1

Engine, Chassis & Body

MITSUBISHI MOTORS

Service Manual

STARION

1987: Volume 1

FOREWORD

This Service Manual has been prepared with the latest service information available at the time of publication. It is subdivided into various group categories and each section contains diagnosis, disassembly, repair, and installation procedures along with complete specifications and tightening references. Use of this manual will aid in properly performing any servicing necessary to maintain or restore the high levels of performance and reliability designed into these outstanding vehicles.



MITSUBISHI
MOTOR SALES OF AMERICA, Inc.

Mitsubishi Motors Corporation reserves the right to make changes in design or to make additions to or improvements in its products without imposing any obligations upon itself to install them on its products previously manufactured.

© 1986 Mitsubishi Motors Corporation

Printed in Japan

GROUP INDEX

Introduction and Master Troubleshooting	
Lubrication and Maintenance	0
Front Suspension	2
Rear Axle	3
Brakes – Service Parking	5
Clutch	6
Cooling	7
Engine	9
Intake and Exhaust System	11
Body and Frame Alignment	13
Fuel System	14
Propeller Shaft and Universal Joints	16
Rear Suspension	17
Steering – Power	19
Transmission – Manual Automatic	21
Wheels and Tires	22
Body	23
Emission Control Systems	25

NOTE:
For Electrical, Heater & Air-conditioning, refer to ...
Volume-2
"Electrical, Heater & Air-conditioning"

HOW TO USE THIS MANUAL

N00BAAF

CONTENTS

The preceding page contains GROUP INDEX which lists the group title and group number.

PAGE NUMBERS

All page numbers consist of two sets of digits separated by a dash. The digits preceding the dash identify the number of the group. The digits following the dash represent the consecutive page number within the group. The page numbers can be found on the top left or right of each page.

TEXT

Unless otherwise specified, each service procedure covers all models. Procedures covering specific models are identified by the model codes or similar designation (engine type, transmission type, etc.). A description of these designations is covered in this unit under "VEHICLE IDENTIFICATION".

TROUBLESHOOTING

Troubleshootings are classified into master troubleshooting and group troubleshooting and located as follows:
The master troubleshooting is prepared when the trouble symptom relates to two or more groups and given in MASTER TROUBLESHOOTING.
The group troubleshooting guide is prepared for causes of problems related to that individual group only; a troubleshooting guide is prepared for each appropriate group.

SERVICE PROCEDURES

The service steps are arranged in numerical order and attentions to be paid in performing vehicle service are described in detail in SERVICE POINTS.

DEFINITION OF TERMS

STANDARD VALUE

Indicates the value used as the standard for judging the quality of a part or assembly on inspection or the value to which the part or assembly is corrected and adjusted. It is given by tolerance.

LIMIT

Shows the standard for judging the quality of a part or assembly on inspection and means the maximum or minimum value within which the part or assembly must be kept functionally or in strength. It is a value established outside the range of standard value.

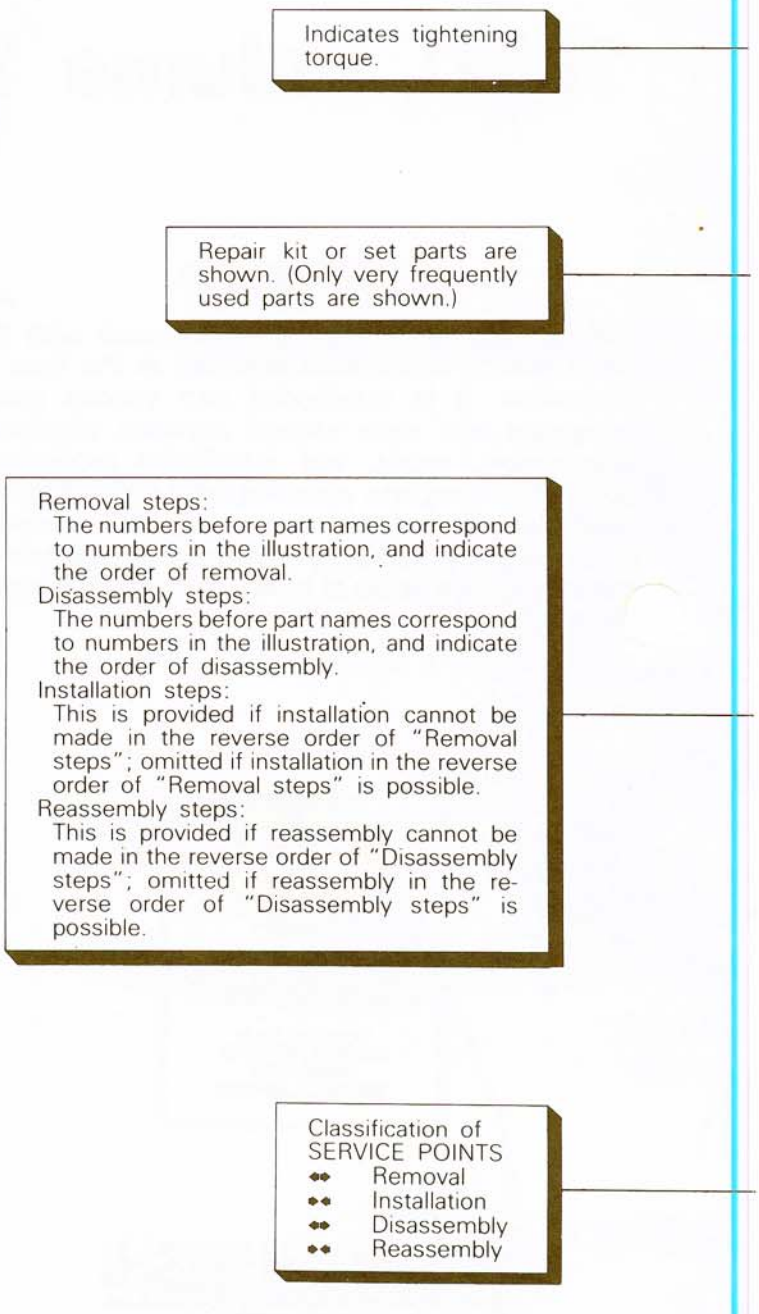

Page number

Group title

Section title

Indicates the incidental operation to be performed before removal or after installation.

5-44 BRAKES – Rear Brake Wheel Cylinder

REAR BRAKE WHEEL CYLINDER

N05VA-

REMOVAL AND INSTALLATION

Pre-removal Operation
- Draining Brake Fluid

Post-installation Operation
- Filling Brake Fluid
- Bleeding Brake Line (Refer to P.5-21.)

Indicates non-reusable part.

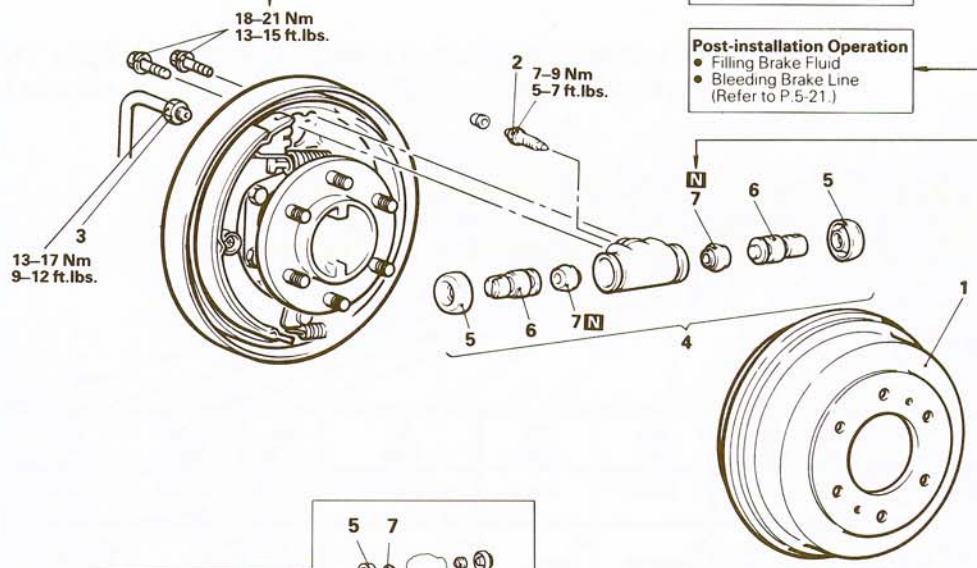

Wheel cylinder kit

Removal steps

1. Brake drum
2. Bleeder screw
3. Brake tube
- ◆◆ 4. Wheel cylinder assembly
- ◆◆ 5. Wheel cylinder boot
- ◆◆ 6. Piston assembly
- ◆◆ ◆◆ 7. Piston cup

NOTE
(1) Reverse the removal procedures to reinstall.
(2) ◆◆: Refer to "Service Points of Removal".
(3) ◆◆: Refer to "Service Points of Installation".
(4) N: Non-reusable parts

14W600

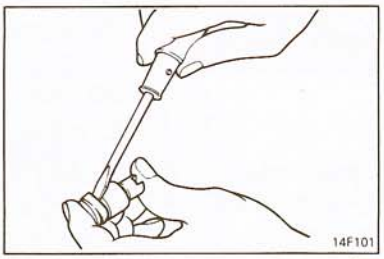

14F101

SERVICE POINTS OF REMOVAL

N05VBAA

7. REMOVAL OF PISTON CUP

Using a screwdriver, remove the piston cup from the piston.

STB Revision

This number corresponds to the number in "Removal steps", "Disassembly steps", "Installation steps" or "Reassembly steps".

An explanation of procedures, notes, etc. regarding removal, installation, disassembly and reassembly.

STB Revision

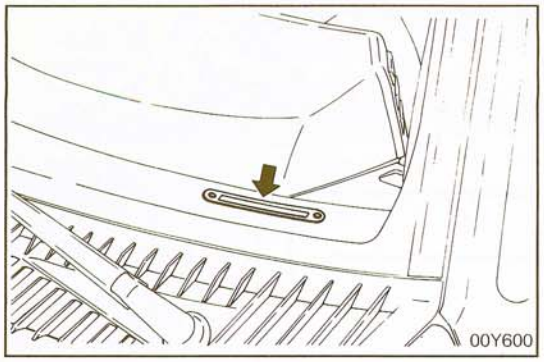

VEHICLE IDENTIFICATION

N00CA--

VEHICLE IDENTIFICATION NUMBER LOCATION

The vehicle identification number (V.I.N.) is located on a plat attached to the left top side of the instrument panel and visib through the windshield.

VEHICLE IDENTIFICATION CODE CHART PLATE

N00CB--

All vehicle identification numbers contain 17 digits. The vehicle number is a code which tells country, make, vehicle type, etc.

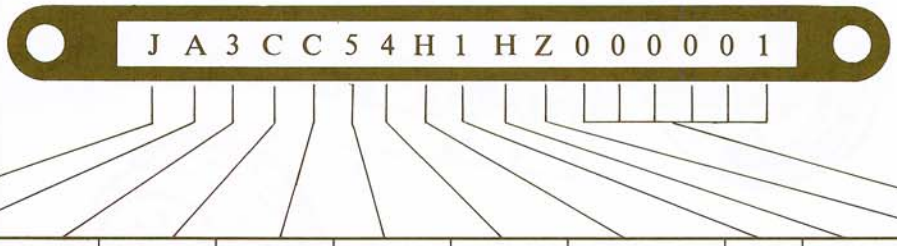

1st Digit	2nd Digit	3rd Digit	4th Digit	5th Digit	6th Digit	7th Digit	8th Digit	9th Digit	10th Digit	11th Digit	12th to 17th Digits
Country	Make	Vehicle type	Others	Line	Series	Body	Engine	*Check digits	Model year	Plant	Serial number
J– Japan	A– Mitsubishi	3– Passenger car	C– Passive belt	C– STARION	5– Premium	4– 3-door hatchback	H– 2.6 liters (155.9 C.I.D.) with turbo-charger N– 2.6 liters (155.9 C.I.D.) turbocharged engine with intercooler	0 1 2 3 . . . 9 X	H– 1987	Z– Okazaki plant	000001 to 999999

NOTE
* "Check digit" means a single number or letter X used to verify the accuracy of transcription of vehicle identification number.

VEHICLE IDENTIFICATION NUMBER LIST

N00CC--

V.I.N. (except sequence number)	Brand (Package)	Destination	Engine displacement	Models code
JA3CC54H□HZ	Mitsubishi	Federal	2.555 liters (155.9 C.I.D.)	A187AMNXLF
JA3CC54H□HZ		California*		A187AMNXLH
JA3CC54H□HZ		Federal		A187AMRXLF
JA3CC54H□HZ		California*		A187AMRXLH
JA3CC54N□HZ		Federal		A187AMNFGLF
JA3CC54N□HZ		California*		A187AMNFGLH

* Can also be sold in Federal states.

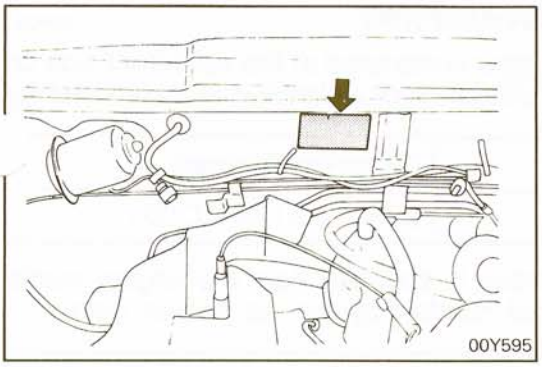

VEHICLE INFORMATION CODE PLATE

N00CD--

Vehicle information code plate is riveted onto the firewall in the engine compartment.
The plate shows model code, engine model, transmission model, final gear ratio, and body color code.

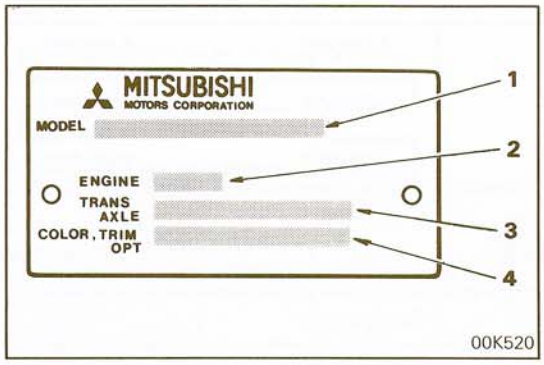

1. MODEL — A187AMNXLF
   - Model series
   - Vehicle model
2. ENGINE — G54B
   - Engine model
3. TRANS-AXLE — KM132□3545
   - Final gear ratio
   - Blank
   - Transmission model
4. COLOR, TRIM OPT — H43
   - Monotone exterior color code

CHASSIS NUMBER

N00CE--

STAMPING LOCATION

The chassis number is stamped on the top center of the firewall located in the engine compartment.

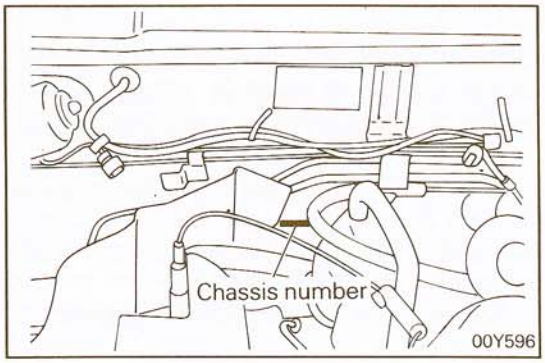

CHASSIS NUMBER CODE CHART

A 1 8 7 M H Z 0 0 0 0 0 1

Vehicle line	Engine displacement	Body type	Refer to 10th thru 17th digits of V.I.N. plate
A18– STARION	7– 2.555 liters (155.9 C.I.D.)	M– 2-door Hatchback	

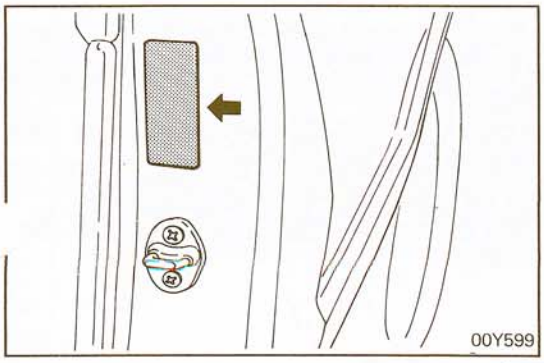

VEHICLE SAFETY CERTIFICATION LABEL

N00CF--

The vehicle safety certification label is attached to face of left door pillar.
This label indicates the month and year of manufacture, Gross Vehicle Weight Rating (G.V.W.R.), Gross Axle Weight Rating (G.A.W.R.) front and rear, and Vehicle Identification Number (V.I.N.).

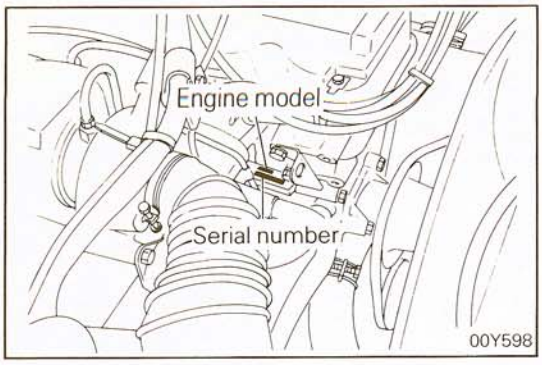

ENGINE MODEL STAMPING

N00CG--

The engine model number is stamped at the right front side on the top edge of the cylinder block as shown in the following:

Engine model	Engine displacement
G54B	2.555 liters (155.9 C.I.D.)

The engine serial number is stamped near the engine model number, and the serial number cycles, as shown below.

Engine serial number	Number cycling
AA0201 to YY9999	AA0201 – – – – → AA9999 AB0001 – – – – → AY9999 BA0001 – – – – → YY9999

BODY COLOR CODE

N00CH--

Exterior code	Body color
H43	Silver (Metallic)
L05	L/OI Gray (Metallic)
R04	Red
W18	White
X15	Black

Theft protection label

For original parts



00K619

For replacement parts



00K621

THEFT PROTECTION

N00CIAA

To provide protection against theft, the vehicle identification number (V.I.N.) is stamped on or its label is affixed to the following major engine, transmission parts and body outer panels.

Engine cylinder block, transmission housing, fender, quarter panel, hood, rear hatch and bumpers.

The theft protection label is also affixed to each of major body outer panels for servicing, while the same information as the theft protection label is stamped on the engine and transmission for servicing.

Caution

1. **Affix masking tape to the theft protection label before repainting the original part. After painting, be sure to remove the masking tape.**
2. **The theft protection label on the service part has masking tape affixed to it. Therefore, paint the part as is and remove the masking tape after painting.**
3. **Do not remove the theft protection label from the original or service part.**

STB Revision

LOCATIONS

Part name	Target area	: for original equipment parts : for replacement parts
Engine	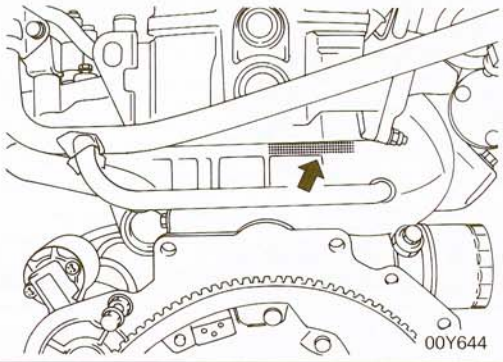 00Y644	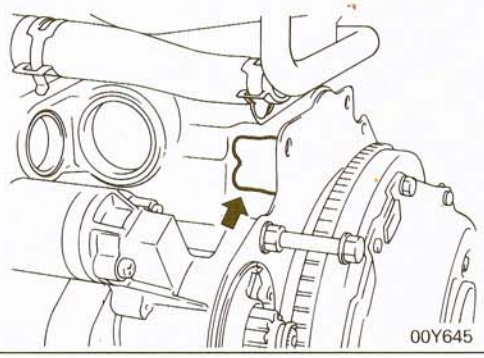 00Y645
Transmission	Manual transmission 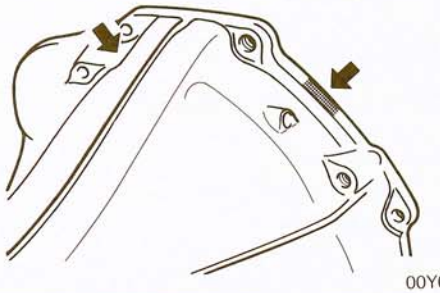 00Y643	Automatic transmission 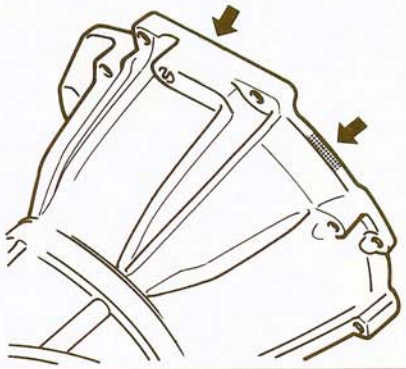 00Y647
Fender	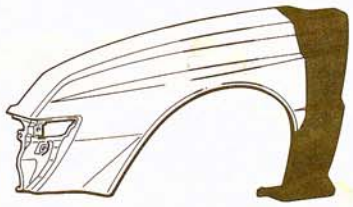 00L0634 • The theft protection label is affixed to the inside surface. • The illustration indicates left hand side, outer. Right hand side is symmetrical.	
Door	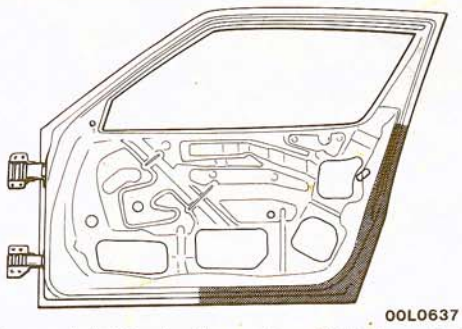 00L0637 • The illustration indicates left hand side, outer. Right hand side is symmetrical.	

Part name	Target area	: for original equipement parts : for replacement parts
Quarter panel	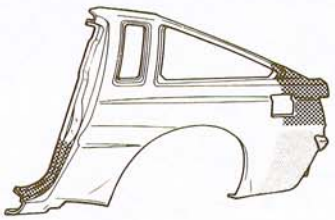 00L0638 • The theft protection label is affixed to the inside surface. • The illustration indicates left hand side, outer. Right hand side is symmetrical.	
Hood	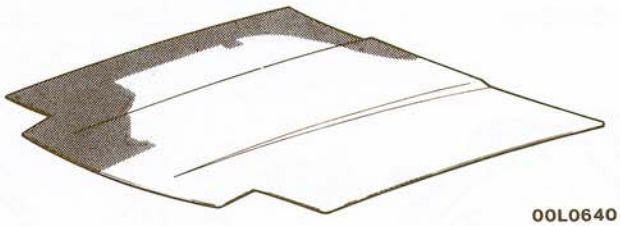 00L0640 • The theft protection label is affixed to the inside surface.	
Rear hatch	 00L0639 • The theft protection label is affixed to the inside surface.	
Bumpers	Front bumper 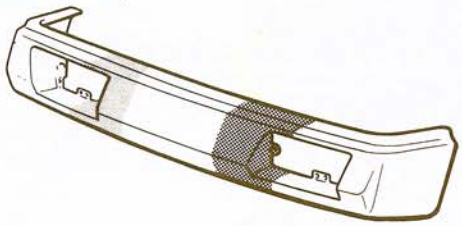 00L0635 Rear bumper 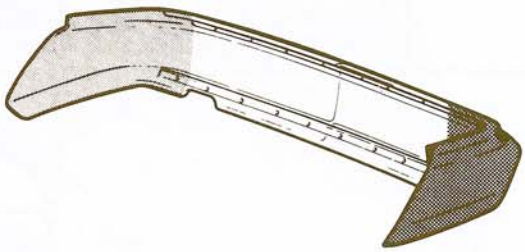 00L0636 • The theft protection label is affixed to the inside surface.	

STB Revision

PRECAUTIONS BEFORE SERVICE N00DAAD

PROTECTING VEHICLE

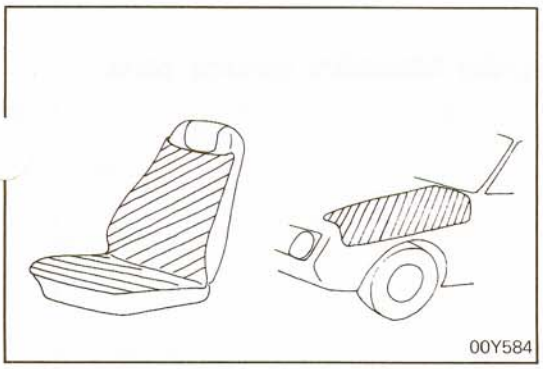
00Y584

If there is a likelihood of damaging painted or interior parts during service operations, protect them with suitable covers (such as seat covers, fender covers, etc.).

REMOVAL AND DISASSEMBLY

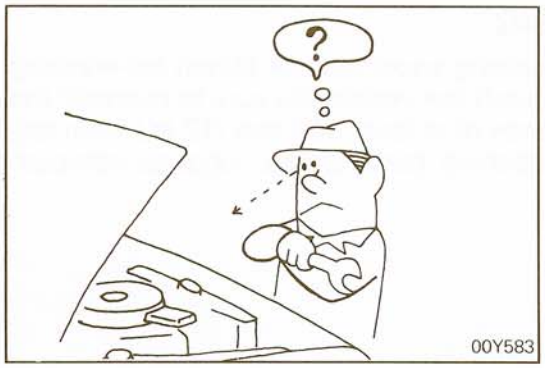

00Y583

When checking a malfunction, find the cause of the problem. If it is determined that removal and/or disassembly is necessary, perform the work by following the procedures contained in this Service Manual.

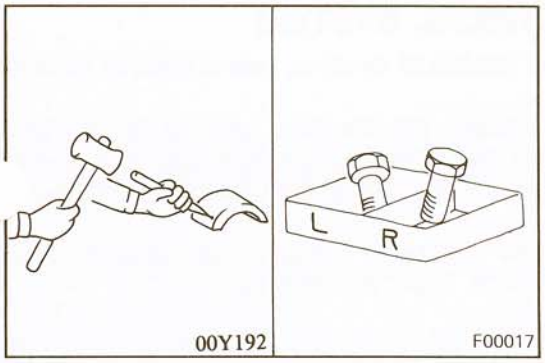

00Y192 F00017

If punch marks or mating marks are made to avoid error in assembly and to facilitate the assembly work, be sure to make them in locations which will have no detrimental effect on performance and/or appearances.
If an area having many parts, similar parts, and/or parts which are symmetrical right and left is disassembled, be sure to arrange the parts so that they do not become mixed during the assembly process.

1. Arrange the parts removed in the proper order.
2. Determine which parts are to be reused and which are to be replaced.
3. If bolts, nuts, etc., are to be replaced, be sure to use only the exact size specified.

SPECIAL TOOLS

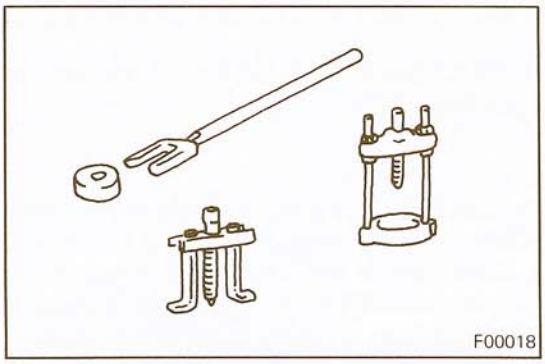
F00018

If other tools are substituted for the special tools to do service or repair work, there is the danger that vehicle parts might be damaged, or the technician might be injured; therefore, be sure to use the special tool whenever doing any work for which the use of one is specified.

PARTS TO BE REPLACED

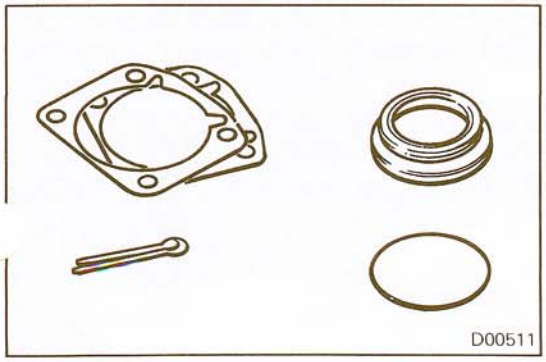
D00511

If any of the following parts are removed, they must be replaced with new parts.

1. Oil seals
2. Gaskets (except rocker cover gasket)
3. Packings
4. O-rings
5. Lock washers
6. Cotter pins
7. Self-locking nuts

PARTS

When replacing parts, use Mitsubishi genuine parts.

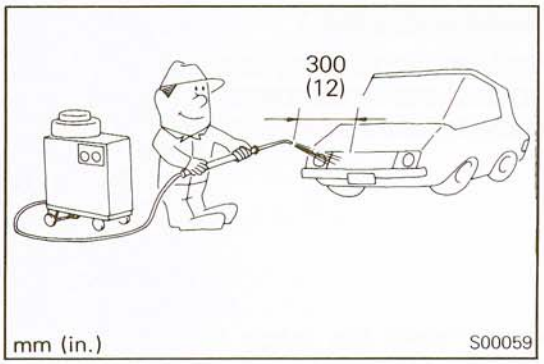

VEHICLE WASHING

If high-pressure car-washing equipment or steam car-washing equipment is used to wash the vehicle, be sure to maintain the spray nozzle at a distance of at least 300 mm (12 in.) from any plastic parts and all opening parts (doors, luggage compartment, sunroof, etc.).

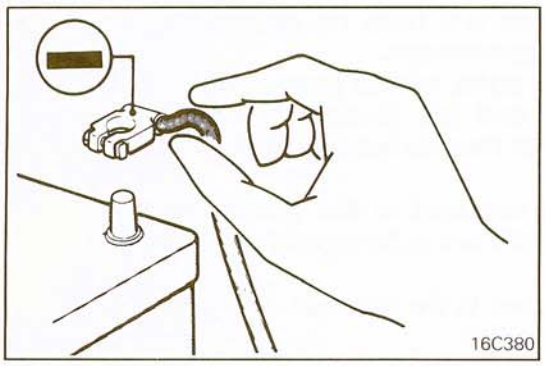

SERVICING ELECTRICAL SYSTEM

1. When servicing the electrical system, pay attention to the following.
   Never attempt to modify an electrical unit or to change wirings, which may otherwise cause not only a vehicle failure but a vehicle fire due to over-capacity load o short-circuit.
2. Before servicing the electrical system, disconnect the negative cable terminal from the battery.

   Caution
   Before connecting or disconnecting the negative cable, be sure to turn off the ignition switch and the lighting switch.
   (If this is not done, there is the possibility of semiconductor parts being damaged.)

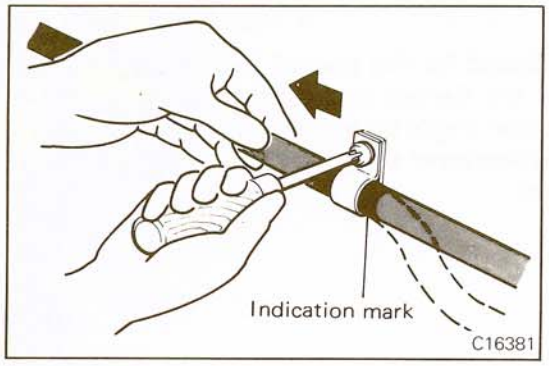

WIRING HARNESSES

1. Secure the wiring harnesses by using clamps. However, for any harness which passes to the engine or other vibrating parts of the vehicle, allow some slack within a range that does not allow the engine vibrations to cause the harness to come into contact with any of the surrounding parts. Then secure the harness by using a clamp.
   In addition, if a mounting indication mark (yellow tape) is on a harness, secure the indication mark in the specified location.
2. If any section of a wiring harness contacts the edge of a part, or a corner, wrap the section of the harness with tape or something similar in order to protect it from damage.

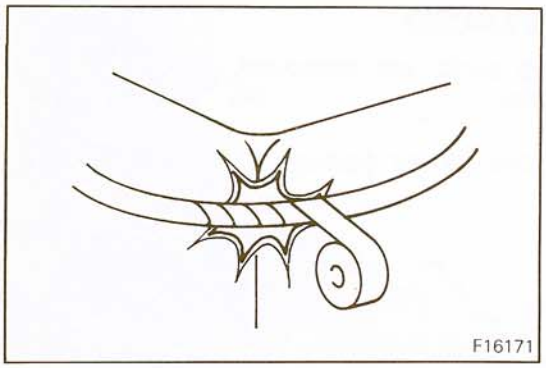

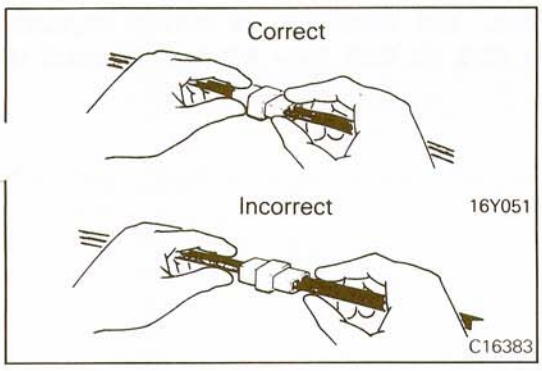

3. When disconnecting a connector, be sure to pull only the connector, not the harness.

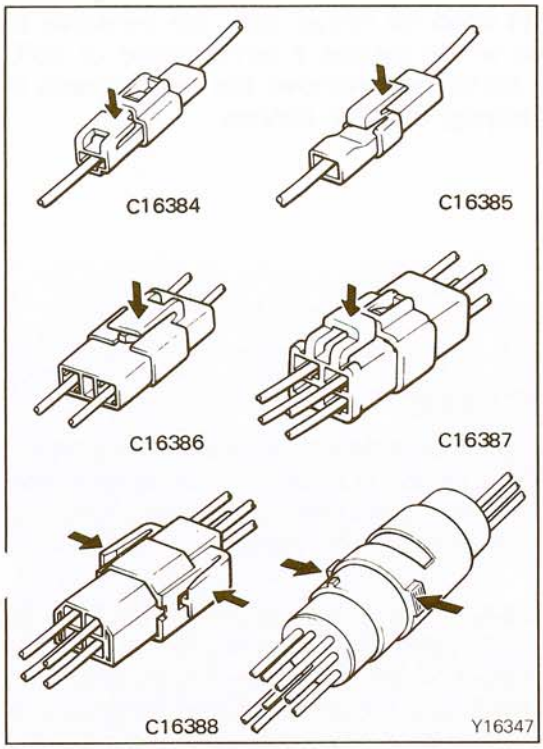

4. Disconnect connectors which have catches by pressing in the direction indicated by the arrows in the illustration.

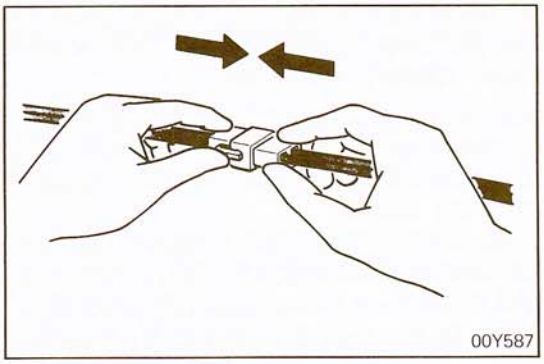

5. Connect connectors which have catches by inserting the connectors until they snap.

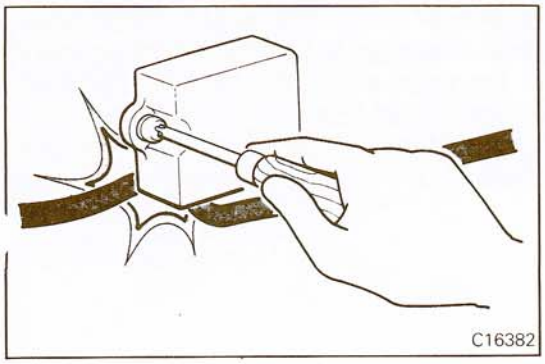

ELECTRICAL COMPONENTS

1. When installing any of the vehicle parts, be careful not to pinch or damage any of the wiring harnesses.

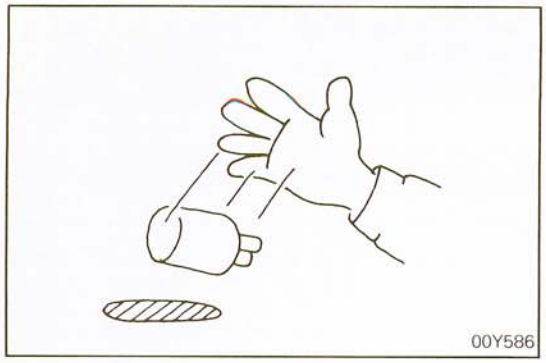

2. Sensors, relays, etc., are sensitive to strong impacts. Handle them with care so that they are not dropped or mishandled.

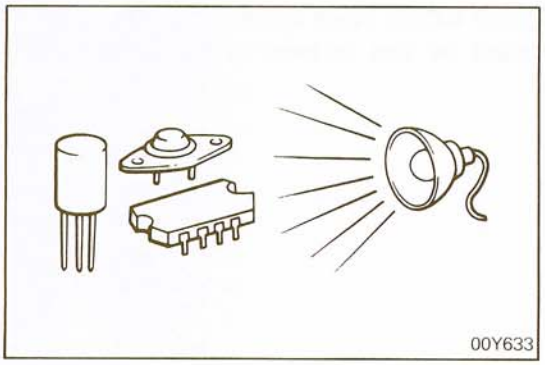

3. The electronic parts used for relays, etc., are sensitive to heat. If any service which causes a temperature of 80°C (176°F) or more is performed, remove the part or parts in question before carrying out the service.

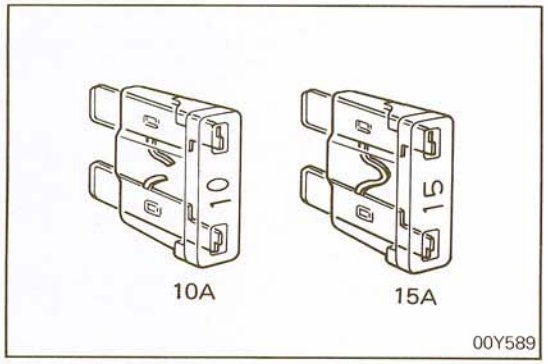

FUSES AND FUSIBLE LINKS

1. If a blown-out fuse is to be replaced, be sure to use only a fuse of the specified capacity. If a fuse of a capacity larger than that specified is used, parts may be damaged and the circuit may not be protected adequately.

   Caution
   1. **If a fuse is blown-out, be sure to eliminate the cause of the problem before installing a new fuse.**
   2. **Check the condition of fuse holders. If rust or dirt is found, clean metal parts with a fine-grained sand-paper until proper metal-to-metal contact is made. Poor contact of any fuse holder will often lead to voltage drop or heating in the circuit and could result in improper circuit operation.**

Nominal size	SAE gauge No.	Permissible current	
		In engine compartment	Other areas
0.3 mm²	AWG 22	–	5A
0.5 mm²	AWG 20	7A	13A
0.85 mm²	AWG 18	9A	17A
1.25 mm²	AWG 16	12A	22A
2.0 mm²	AWG 14	16A	30A
3.0 mm²	AWG 12	21A	40A
5.0 mm²	AWG 10	31A	54A

2. If additional optional equipment is to be installed in the vehicle, follow the procedure listed in the appropriate instruction manual; however, be sure to pay careful attention to the following points:
   (1) In order to avoid overloading the wiring, take the electrical current load of the optional equipment into consideration, and determine the appropriate wire size.
   (2) Where possible, route the wiring through the existing harnesses.
   (3) If an ammeter or similar instrument is to be connected to a live-wire circuit, use tape to protect the wire, use a clamp to secure the wire, and make sure that there is no contact with any other parts.
   (4) Be sure to provide a fuse for the load circuit of the optional equipment.



TUBES AND OTHER RUBBER PARTS

Be careful to avoid spilling any gasoline, oil, etc., because if it adheres to any tubes or other rubber parts, they might be adversely affected.

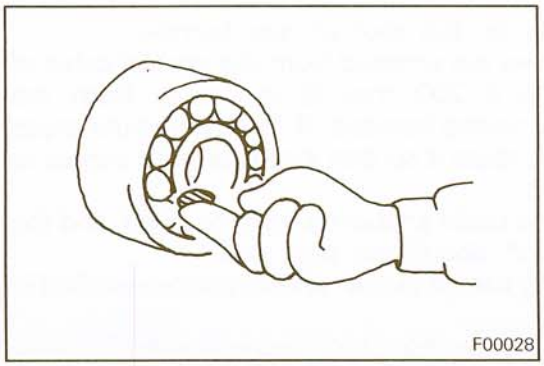

LUBRICANTS

In accordance with the instructions in this Service Manual, apply the specified lubricants in the specified locations during assembly and installation.

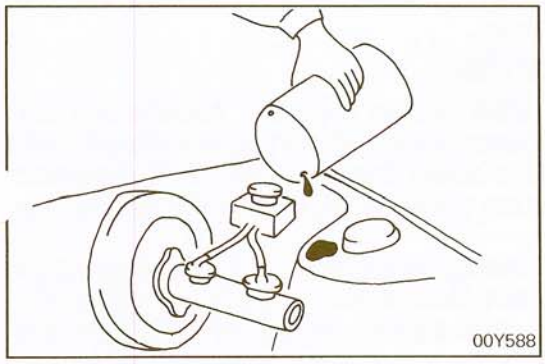

BRAKE FLUID

Be careful to avoid spilling any brake fluid on painted surfaces, because the paint coat might be discolored or damaged.



DOING SERVICE WORK IN GROUPS OF TWO OR MORE TECHNICIANS

If the service work is to be done by two or more technicians working together, extra caution must be taken.

NOTE ON INSTALLATION OF RADIO EQUIPMENT

N00EA--

The computers of the electronic control system has been designed so that external radio waves will not interfere with their operation.
However, if antenna or cable of amateur transceiver etc. is routed near the computers, it may affect the operation of the computers, even if the output of the transceiver is no more than 25W.
To protect each of the computers from interference by transmitter (hum, transceiver, etc.), the following should be observed.

1. Install the antenna on the roof or rear bumper.
2. Because radio waves are emitted from the coaxial cable of the antenna, keep it 200 mm (8 in.) away from the computers and the wiring harness. If the cable must cross the wiring harness, route it so that it runs at right angles to the wiring harness.
3. The antenna and the cable should be well matched, and the standing-wave ratio* should be kept low.
4. A transmitter having a large output should not be installed in the vehicle.
5. After installation of transmitter, run the engine at idle, emit radio waves from the transmitter and make sure that the engine is not affected.

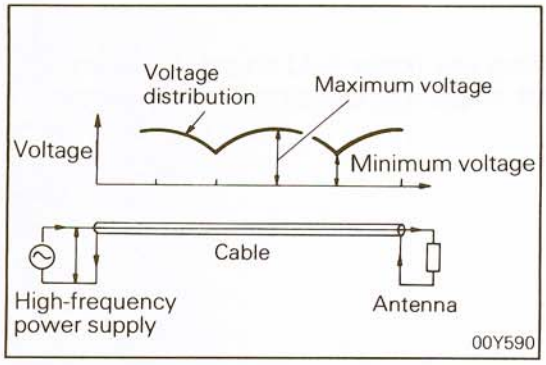

*STANDING-WAVE RATIO

If an antenna and a cable having different impedances are connected, the input impedance Zi will vary in accordance with the length of the cable and the frequency of the transmitter, and the voltage distribution will also vary in accordance with the location.
The ratio between this maximum voltage and minimum voltage is called the standing-wave ratio. It can also be represented by the ratio between the impedances of the antenna and the cable.
The amount of radio waves emitted from the cable increases as the standing-wave ratio increases, and this increases the possibility of the electronic components being adversely affected.

TOWING AND HOISTING

N00GA--

WRECKER TOWING

1. This vehicle cannot be towed with sling-type equipment.
2. If a vehicle is towed from the front, use wheel lift or flat bed equipment.
3. If a vehicle is towed from the rear, use flat bed equipment.

SAFETY PRECAUTIONS

1. Any loose or protruding parts of damaged vehicle such as hoods, doors, fenders, trim, etc., should be secured prior to moving the vehicle.
2. Operator should refrain from going under a vehicle such as hood, doors, fenders, trim, etc., unless the vehicle is adequately supported by safety stands.
3. Never allow passengers to ride in a towed vehicle.
4. State and local rules and regulations must be followed when towing a vehicle.

HOISTING

POST TYPE

Special care should be taken when raising the vehicle on a frame contact type hoist. The hoist must be equipped with the proper adapters in order to support the vehicle at the proper locations. (Next page)
Conventional hydraulic hoists may be used after determining that the adapter plates will make firm contact with the front/rear crossmembers.

FLOOR JACK

A regular floor jack may be used under the front/rear crossmembers.

Caution

1. **A floor jack must never be used on any part of the underbody.**
2. **Do not attempt to raise one entire side of the vehicle by placing a jack midway between front and rear wheels. This practice may result in permanent damage to the body.**

EMERGENCY JACKING

Jack receptacles are located at the body sills to accept the scissors jack supplied with the vehicle for emergency road service. Always block opposite wheels and jack on level surface.

FRAME CONTACT SUPPORT LOCATION

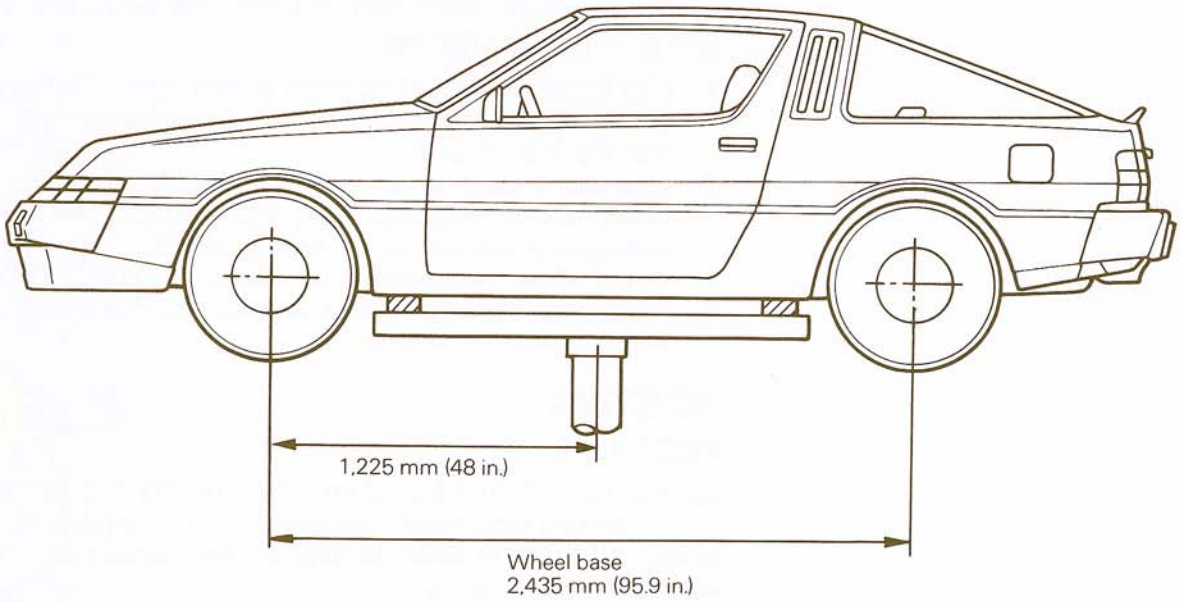

00Y625

LIFTING, JACKING SUPPORT LOCATION

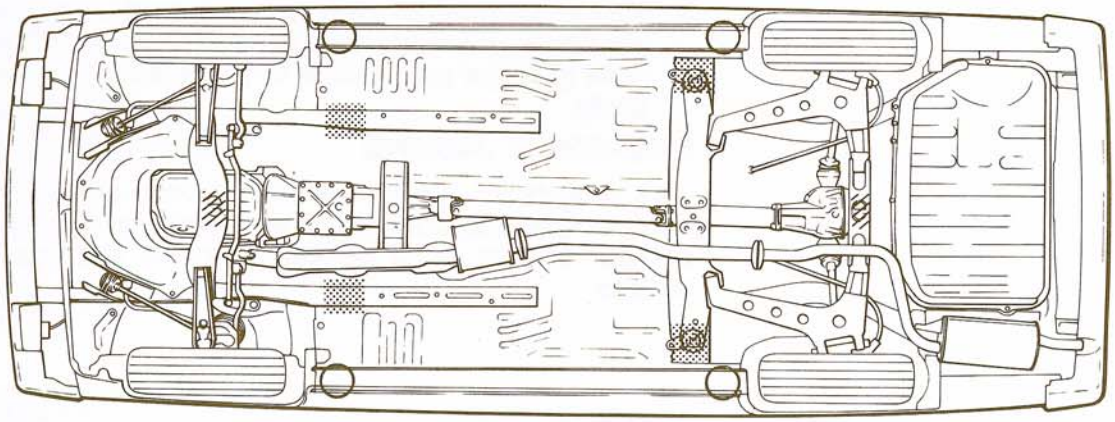

Frame contact hoist

Floor jack

Twin post hoist or scissors jack (emergency) locations

00Y196

STB Revision

GENERAL DATA AND SPECIFICATIONS

N00HA--

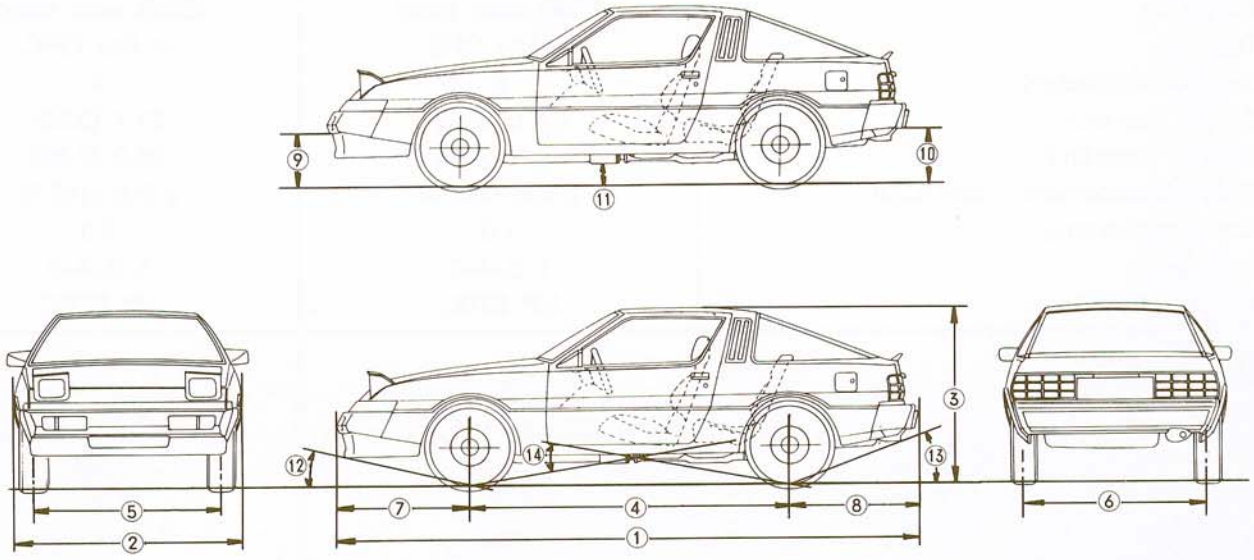

00Y626

Items			A187AMNXL A187AMRXL	A187AMNFGL
Vehicle dimensions mm (in.)				
Overall length		①	4,400 (173.2)	4,400 (173.2)
Overall width		②	1,685 (66.3)	1,735 (18.3)
Overall height		③	1,275 (50.2)	1,275 (50.2)
Wheel base		④	2,435 (95.9)	2,435 (95.9)
Tread	Front	⑤	1,410 (55.5)	1,465 (57.7)
	Rear	⑥	1,400 (55.1)	1,455 (57.3)
Overhang	Front	⑦	970 (38.2)	970 (38.2)
	Rear	⑧	995 (39.2)	995 (39.2)
Height at curb mass (wt.)				
Front bumper to ground		⑨	355 (14.0)	355 (14.0)
Rear bumper to ground		⑩	370 (14.6)	370 (14.6)
Minimum running ground clearance		⑪	115 (4.5)	115 (4.5)
Angle of approach		⑫	18°	16°
Angle of departure		⑬	19°	19°
Ramp breakover angle		⑭	12°	12°
Vehicle weights kg (lbs.)				
Curb weight			1,355 (2,987) – M/T 1,372 (3,025) – A/T	1,400 (3,086)
Gross vehicle weight rating			1,800 (3,969)	1,800 (3,969)
Gross axle weight rating	Front		880 (1,940)	880 (1,940)
	Rear		1,000 (2,205)	1,000 (2,205)
Seating capacity			5	5

STB Revision

Items		A187AMNXL A187AMRXL	A187AMNFGL
Engine			
Model No.		G54B with turbo	G54B with turbo
Type		In line OHC	In line OHC
Number of cylinders		4	4
Bore mm (in.)		91.1 (3.59)	91.1 (3.59)
Stroke mm (in.)		98.0 (3.86)	98.0 (3.86)
Piston displacement	cm^3 (CID)	2,555 (155.9)	2,555 (155.9)
Compression ratio		7.0	7.0
Firing order		1–3–4–2	1–3–4–2
Basic ignition timing		10° BTDC	10° BTDC
Manual transmission			
Model No.		KM132	KM132
Type		5-speed manual	5-speed manual
Gear ratio	1st	3.369	3.369
	2nd	2.035	2.035
	3rd	1.360	1.360
	4th	1.000	1.000
	5th	0.856	0.856
	Reverse	3.578	3.578
Automatic transmission			
Model No.		JM600	JM600
Type		4-speed automatic	4-speed automatic
Gear ratio	1st	2.458	2.458
	2nd	1.458	1.458
	3rd	1.000	1.000
	4th	0.686	0.686
	Reverse	2.182	2.182
Final drive gear ratio		3.545	3.545
Clutch			
Type		Dry-single disc & diaphragm spring	Dry-single disc & diaphragm spring

Items		A187AMNXL A187AMRXL	A187AMNFGL	
Chassis				
Tire		215/60R15–90H Radial	Front 205/55VR16 Radial	Rear 225/50VR16 Radial
Front suspension				
Type		Independent strut	Independent strut	
Rear suspension				
Type		Independent strut	Independent strut	
Brakes				
Type	Front	Disc	Disc	
	Rear	Disc	Disc	
Power steering				
Gear type		Integral type (Recirculating ball nut)	Integral type (Recirculating ball nut)	
Gear ratio		14.25 (Constant ratio gear)	14.25 (Constant ratio gear)	
Fuel tank capacity		75 liters (19.8 U.S.gals., 16.5 Imp.gals.)	75 liters (19.8 U.S.gals., 16.5 Imp.gals.)	

TIGHTENING TORQUE

N00JA--

Description	Head mark ④		Head mark ⑦	
	Nm	ft.lbs.	Nm	ft.lbs.
Thread for general purposes (size x pitch) mm				
6 x 1.0	3.0 – 3.9	2.2 – 2.9	4.9 – 7.8	3.6 – 5.8
8 x 1.25	7.9 – 12	5.8 – 8.7	13 – 19	9.4 – 14
10 x 1.25	16 – 23	12 – 17	27 – 39	20 – 29
12 x 1.25	29 – 43	21 – 32	47 – 72	35 – 53
14 x 1.5	48 – 70	35 – 52	77 – 110	57 – 85
16 x 1.5	67 – 100	51 – 77	130 – 160	90 – 120
18 x 1.5	100 – 150	74 – 110	180 – 230	130 – 170
20 x 1.5	150 – 190	110 – 140	260 – 320	190 – 240
22 x 1.5	200 – 260	150 – 190	340 – 430	250 – 320
24 x 1.5	260 – 320	190 – 240	420 – 550	310 – 410

Items	Nm	ft.lbs.	Remarks
Taper thread for pipes (size)			
PT 1/8	7.9 – 12	5.8 – 8.7	Internal thread: Aluminum
	16 – 19	12 – 14	Internal thread: Cast iron
PT 1/4	19 – 30	14 – 22	Internal thread: Aluminum
	34 – 45	25 – 33	Internal thread: Cast iron
PT 3/8	39 – 54	29 – 40	Internal thread: Aluminum
	58 – 73	43 – 54	Internal thread: Cast iron
Taper thread for dry sealed pipes (size)			
NPTF 1/16	4.9 – 7.8	3.6 – 5.8	Internal thread: Aluminum
	7.9 – 12	5.8 – 8.7	Internal thread: Cast iron
NPTF 1/8	7.9 – 12	5.8 – 8.7	Internal thread: Aluminum
	16 – 19	12 – 14	Internal thread: Cast iron
NPTF 1/4	19 – 30	14 – 22	Internal thread: Aluminum
	34 – 45	25 – 33	Internal thread: Cast iron

MASTER TROUBLESHOOTING

N00KAAD

ENGINE OVERHEATS

Symptom	Probable cause	Remedy	Reference page
Engine overheats	Cooling system faulty	Troubleshoot cooling system	7-7
	Incorrect ignition timing	Readjust ignition timing	8-155

ENGINE WILL NOT CRANK OR CRANKS SLOWLY

Symptom	Probable cause	Remedy	Reference page
Engine will not crank or cranks slowly	Starting system faulty	Troubleshoot starting system	8-138

ENGINE WILL NOT START OR HARD TO START (CRANKS OK)

Symptom	Probable cause	Remedy	Reference page
Engine will not start or hard to start (Cranks OK)	No fuel supply injector	Check fuel line	14-88
	Injection system problems	Troubleshoot fuel system	14-28
	Ignition system problems	Troubleshoot ignition system	8-153
	Vacuum leaks • Purge control valve hose • Vacuum hoses • Intake manifold • Injection mixer • EGR valve	Repair as necessary	–
	Compression too low	Check compression (Troubleshoot engine)	9-14 (9-12)

ROUGH IDLE OR ENGINE STALLS

Symptom	Probable cause	Remedy	Reference page
Rough idle or engine stalls	Vacuum leaks • Purge control valve hose • Vacuum hoses • Intake manifold • Injection mixer • EGR valve	Repair as necessary	–
	Ignition system problems	Troubleshoot ignition system	8-153
	Idle speed too low	Check idle speed control (ISC) system	14-31
	Fuel injection system problems	Troubleshoot fuel system	14-28
	Exhaust gas recirculation (EGR) system problems	Troubleshoot EGR system	25-27
	Engine overheats	Refer to "Engine Overheats"	–
	Compression too low	Check compression (Troubleshoot engine)	9-14 (9-12)

ENGINE HESITATES OR POOR ACCELERATION

Symptom	Probable cause	Remedy	Reference page
Engine hesitates or poor acceleration	Ignition system problem	Troubleshoot ignition system	8-153
	Vacuum leaks • Purge control valve hose • Vacuum hoses • Intake manifold • Injection mixer • EGR valve	Repair as necessary	–
	Air cleaner clogged	Check air cleaner	0-13
	Fuel line clogged	Check fuel line	14-88
	Fuel injection system problem	Troubleshoot fuel system	14-28
	Emission control system problem • EGR valve always on	Check EGR valve	25-27
	Engine overheats	Refer to "Engine Overheats"	–
	Compression too low	Check compression (Troubleshoot engine)	9-14 (9-12)

ENGINE DIESELING

Symptom	Probable cause	Remedy	Reference page
Engine dieseling (runs after ignition switch is turned off)	Incorrect ignition timing	Readjust ignition timing	8-155

EXCESSIVE OIL CONSUMPTION

Symptom	Probable cause	Remedy	Reference page
Excessive oil consumption	Oil leak	Repair as necessary	–
	Positive crankcase ventilation line clogged	Check positive crankcase ventilation system	0-13
	Valve stem seal worn or damaged	Replace valve stem seal	9-49
	Valve stem worn	Check valves and guides	9-45, 46
	Piston ring worn or damaged	Check piston rings	9-58

POOR FUEL MILEAGE

Symptom	Probable cause	Remedy	Reference page
Poor fuel mileage	Fuel leak	Repair as necessary	–
	Air cleaner clogged	Check air cleaner filter	0-13
	Ignition problems	Troubleshoot ignition system	8-153
	Fuel injection system problems	Troubleshoot fuel system	14-28
	Compression too low	Check compression	9-14
	Tires improperly inflated	Inflate tires to proper pressure	22-2
	Clutch slips	Troubleshoot clutch	6-5
	Brakes drag	Troubleshoot brakes	5-19

NOISE

Symptom	Probable cause	Remedy	Reference page
Noise	Loose bolts and nuts	Retighten as necessary	–
	Engine noise	Troubleshoot engine	9-12

HARD STEERING

00KBAD

Symptom	Probable cause	Remedy	Reference page
Hard steering	Loose power steering oil pump belt	Adjust	19-11
	Low fluid level	Refill	–
	Air in power steering system	Bleed air	19-12
	Low tire pressure	Adjust	22-2
	Excessive turning resistance of lower arm ball joint	Replace	2-19
	Excessively tightened linkage ball joint	Adjust	19-38
	Improper front wheel alignment	Correct	2-6
	Excessive turning resistance of tie-rod ball joint	Replace	19-39
	No lubrication to tie-rod	Lubricate	–
	Sticky flow control valve	Replace	19-33

POOR RETURN OF STEERING WHEEL TO CENTER

Symptom	Probable cause	Remedy	Reference page
Poor return of steering wheel to center	Improper front wheel alignment	Adjust	2-6
	Improper tire pressure	Adjust	22-2
	Damaged front wheel bearing	Replace	2-8, 10

POOR RIDING

Symptom	Probable cause	Remedy	Reference page
Poor riding	Improper tire pressure	Adjust	22-2
	Imbalanced wheels	Repair	22-4
	Improper front or rear wheel alignment	Repair or replace	2-6,14, 17-6, 13, 15
	Malfunctioning shock absorber		
	Broken or weakened stabilizer	Replace	2-14, 23, 17-12, 15
	Broken or weakened coil spring		
	Loose suspension securing bolt(s)	Retighten	2-12, 19, 23, 17-7
	Worn lower arm bushing	Replace lower arm bushing	2-21

ABNORMAL TIRE WEAR

Symptom	Probable cause	Remedy	Reference page
Abnormal tire wear	Improper front or rear wheel alignment	Adjust	2-6, 17-6
	Improper tire pressure	Refer to Group 22 TROUBLESHOOTING	22-2, 4
	Imbalanced wheels		
	Loose wheel bearings	Adjust or replace	2-8, 9, 10, 3-21
	Malfunctioning shock absorber	Replace	2-14, 17-13, 15

ROAD WANDER

Symptom	Probable cause	Remedy	Reference page
Road wander	Improper front or rear wheel alignment	Adjust	2-6, 17-6
	Excessive play of steering wheel	Repair	19-9
	Poor turning resistance of lower arm ball joint	Repair	2-19
	Improper tire pressure	Adjust	22-2
	Loose or worn lower arm bushing	Retighten or replace	2-8, 10, 19, 21
	Loose or worn wheel bearings		

VEHICLE PULLS TO ONE SIDE

Symptom	Probable cause	Remedy	Reference page
Vehicle pulls to one side	Improper front or rear wheel alignment	Adjust	2-6, 17-6
	Imbalanced or worn tires	Repair or replace	22-2, 4
	Uneven tire pressure		
	Excessive turning resistance of lower arm ball joint	Replace	2-19
	Wheel bearing seizure	Replace	2-8, 10
	Bend drive shaft	Replace	3-24
	Deformed lower arm	Repair	2-19

STEERING WHEEL SHIMMY

Symptom	Probable cause	Remedy	Reference page
Steering wheel shimmy	Improper front or rear wheel alignment	Adjust	2-6, 17-6
	Improper tire pressure	Adjust	22-2
	Imbalanced wheels	Repair	–
	Poor turning resistance of lower arm ball joint	Replace	2-19
	Excessive play of steering wheel	Repair	19-9
	Broken or weakened front or rear stabilizer	Replace	2-23, 17-12
	Worn lower arm bushing	Replace lower arm assembly	2-21
	Malfunctioning shock absorber	Replace	2-14, 17-13, 15
	Broken or weakened coil spring		
	Wear, play, or seizure of wheel bearing	Replace	2-8, 10
	Wear, play, or seizure of drive shaft ball joint	Replace	3-26

BOTTOMING

Symptom	Probable cause	Remedy	Reference page
Bottoming	Overloaded vehicle	Correct	–
	Broken or weakened coil spring	Replace	2-14, 17-13, 15
	Malfunctioning shock absorber		

WHEEL BEARING TROUBLESHOOTING

Trouble	Symptom	Probable cause
itting	Pitting occurs because of uneven rotation of race and bearing surfaces	Excessive bearing preload Excessive load
Flaking	The surface peels because of uneven rotation of the race and bearing surfaces	End of bearing life Improper bearing assembly
Cracking	Chipping or cracking of cage or roller edges	Impact when bearing was installed (such as being hit with a hammer)
Flat spotting	When large load is applied, race and roller contact surfaces compress, forming indentations	Excessive bearing preload Excessive load Vibration when bearings are not used, such as during shipment on freight cars, transport trucks, etc.
Nicks	Instead of rolling along race surface, rollers slide, thus damaging surface	Insufficient grease Excessive bearing preload Excessive load Faulty oil seal
Smearing	Damage or wear caused by minute particles adhering to surfaces results in rough movement and such high temperatures that parts of surface melt	Excessive variation of loads on bearings Use of grease other than that specified Insufficient grease
Rust, corrosion	Appears on various areas of the bearing	Use of grease other than that specified Faulty oil seal Presence of water or moisture
Wear	Wear of surface areas caused by friction	Insufficient grease Foreign matter Rust or corrosion due to moisture Use of grease other than that specified Faulty oil seal
Discoloration	Grease discoloration results from grease deterioration which causes particles of pigment contained in grease to adhere to surfaces Heat discoloration will appear as a deep brown or purple	Use of grease other than that specified Faulty oil seal Excessive bearing preload Excessive load

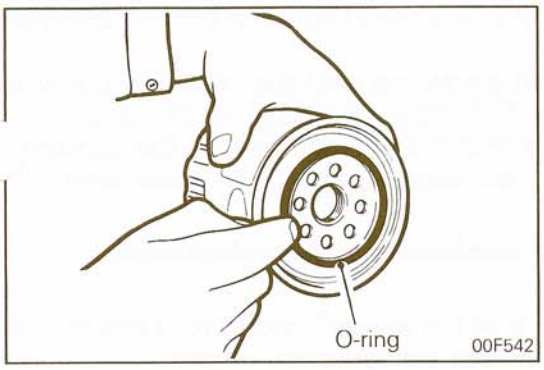

(1) Use filter wrench or the like to remove oil filter.
(2) Apply a thin film of engine oil to the surface of gasket before screwing filter on.
(3) Then tighten filter enough by hand.
(4) Start and run engine and check for engine oil leaks.
(5) After stopping engine, check oil level and refill as necessary.

VALVE CLEARANCE (Check and adjust as required) N00SACH

Incorrect valve clearances will not only result in unsteady engine operation, but will also cause excessive noise and reduced engine output.
Check the valve clearances and adjust as required while the engine is hot.

Valve-to-rocker arm clearances:
Jet valves 0.25 mm (0.010 in.)

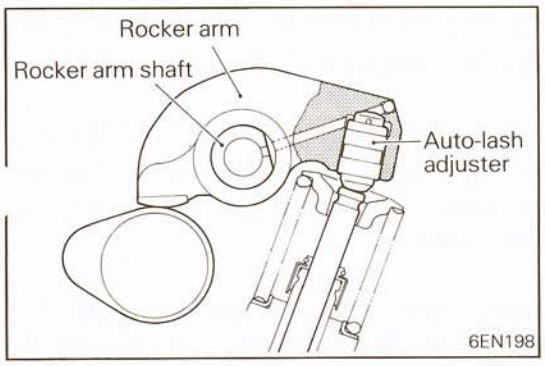

VALVE CLEARANCE ADJUSTMENT

INTAKE AND EXHAUST VALVES

The auto-lash adjuster is installed to the rocker arm so that the valve clearance adjustment is maintenance-free.
For additional information regarding the auto-lash adjuster, refer to GROUP 9 ENGINE.

JET VALVE

Caution
The cylinder head bolts should be retightened before attempting this adjustment.

(1) Warm up the engine until the engine coolant is heated to 85 to 95°C (185 to 203°F).
(2) Remove all spark plugs from the cylinder head for easy operation.
(3) Remove the air intake pipe.
(4) Remove the rocker cover.

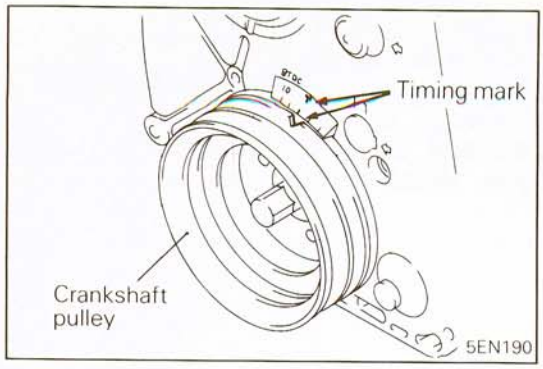

(5) Set the No. 1 piston at top dead center on the compression stroke.
Turn the crankshaft clockwise until the notch on pulley is lined up with the "T" mark on timing chain cover.
In this state, check that the mating mark on the camsha sprocket is at the position shown in the illustration.

Caution
Do not turn the crankshaft counterclockwise.

NOTE
If the mating mark is at the opposite side, No. 4 piston is at top dead center on the compression stroke.

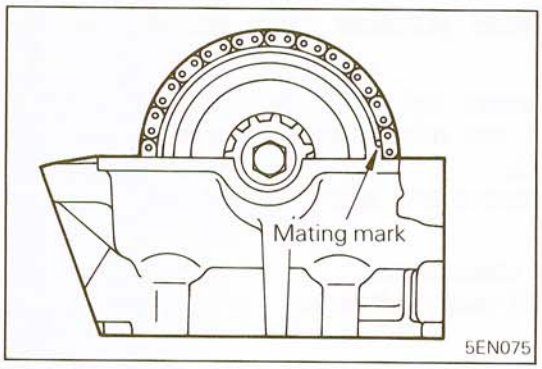

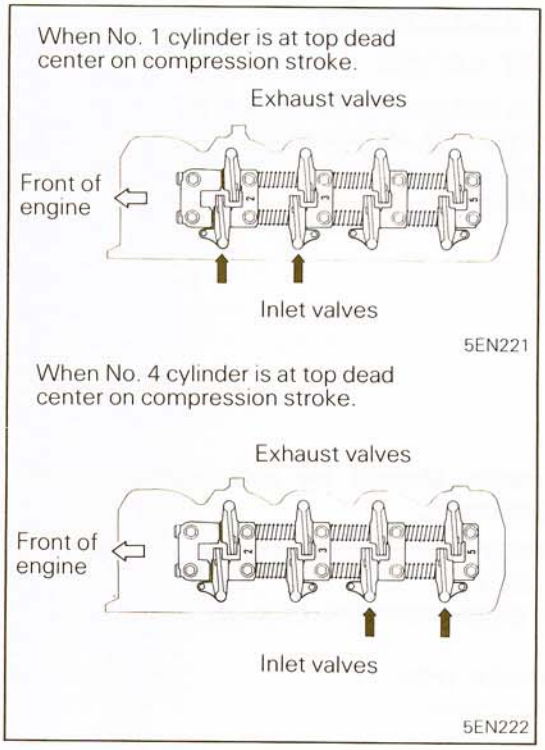

(6) Measure the valve clearance at points indicated by arrows.

Standard value (on hot engine): 0.25 mm (0.0098 in.)

NOTE
The valve clearance on cold engine is 0.17 mm (0.007 in.).

(7) If the jet valve clearance is not as specified, loosen the lock nut and adjust the clearance using a feeler gauge while turning the adjusting screw.

Caution
The jet valve spring has a small tension and the adjustment is somewhat delicate. Be careful not to push in the jet valve by turning adjusting screw too much.

(8) While holding the adjusting screw with a screwdriver to prevent it from turning, tighten the lock nut to specified torque.

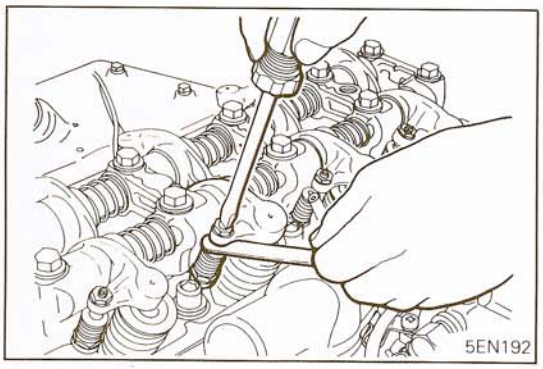

(9) Turn the crankshaft through 360° to line up the notch on the crankshaft pulley with the "T" mark on timing chain cover.
(10) Check the other valves and if they are out of specification, readjust according to steps (7) and (8).

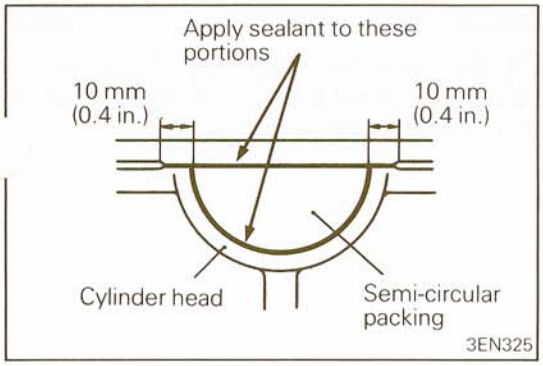

(11)Apply specified sealant to the semi-circular packing on the portions shown in the illustration.

Recommended adhesive: 3M ART Part No. 8660 or equivalent

(12)Install the rocker cover.
(13)Install the air intake pipe.
(14)Install the spark plugs.

ENGINE IDLE SPEED (Check and adjust as required) N00SADD

Caution
The improper setting (throttle valve opening) will increase exhaust gas temperature at deceleration, reducing catalyst life greatly and deteriorating exhaust gas cleaning performance. It also has effect on fuel consumption and engine braking.

Checking Conditions

- Engine coolant temperature: 85 – 95°C (185 – 203°F)
- Lights, electric cooling fan and accessory drive: OFF
- Transmission: Neutral
- Steering wheel: Straight forward

(1) Set the timing light and tachometer.
(2) Start the engine and let it idle.
(3) Check the basic ignition timing and adjust if necessary.

Basic ignition timing: 10° BTDC ± 2°*

* When checking the basic ignition timing at high altitude, stop the engine and disconnect the water-proof female connector from the ignition timing adjusting connector. Connect a lead wire with an alligator clip to the ignition timing adjusting terminal to ground it.

NOTE
For the ignition timing check and adjustment procedures, refer to GROUP 8 ELECTRICAL – Ignition System.

(4) Run the engine for more than 5 seconds at an engine speed of 2,000 to 3,000 rpm.
(5) Run the engine at idle for 2 minutes.
(6) Take idle speed reading. If outside specified limits, check the ISC system.

NOTE
The idle speed adjustment is unnecessary since this system controls the idle speed.

Curb idle speed: 850 ± 100 rpm

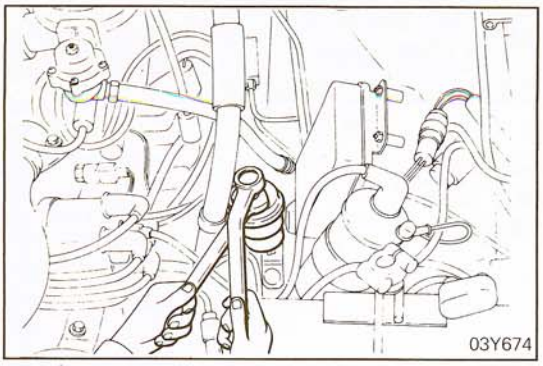

FUEL FILTER (Replace) N00SAFA

The fuel filter should be replaced regularly because its performance is reduced by dirt and water collected over an extended period of use. Replace as required.

FUEL SYSTEM (Check for leaks) N00SAGA

TANK, LINES AND CONNECTIONS

(1) Check for damage or leakage in the fuel lines and connections.
(2) Inspect the surface of fuel hoses for heat and mechanical damage. Hard and brittle rubber, cracking, checking, tears, cuts, abrasions and excessive swelling indicate deterioration of the rubber.
(3) If the fabric casing of the rubber hose is exposed by cracks and abrasions in the fuel system, the hoses should be changed.

VACUUM HOSES, SECONDARY AIR HOSES, CRANKCASE VENTILATION HOSES AND WATER HOSES (Replace) N00SAHA

Replace them and make sure that hoses do not come in contact with any heat source on moving component whic might cause heat damage or mechanical wear.

FUEL HOSES, VAPOR HOSES, AND FUEL FILLER CAP (Replace) N00SAIA

Service procedures to check the hoses for damage are the same as those described in the section "Vacuum hoses, secondary air hoses, crankcase ventilation hoses and water hoses".
For removal and installation procedures, refer to GROUP 14 FUEL SYSTEM – Fuel Tank, Fuel Line and Vapor Line.

TURBOCHARGER AIR INTAKE HOSES AND OIL HOSES (Replace) – for fuel-injection turbocharged vehicles N00SAJA

The turbocharger air intake hoses and oil hoses must be replaced periodically with new ones. The air entered from outside the air cleaner filter may make intake air dirty, resulting in engine power less than normal.
The oil leakage from oil hose may provide improper lubrication in the turbocharger, resulting in engine power less than normal.
For removal and installation procedure, refer to GROUP 11 INTAKE AND EXHAUST SYSTEM – Turbocharger.

AIR CLEANER FILTER (Replace) N00SAKD

The air cleaner filter will becôme dirty and loaded with dust during use, and the filtering effect will be substantially reduced. Replace it with a new one.

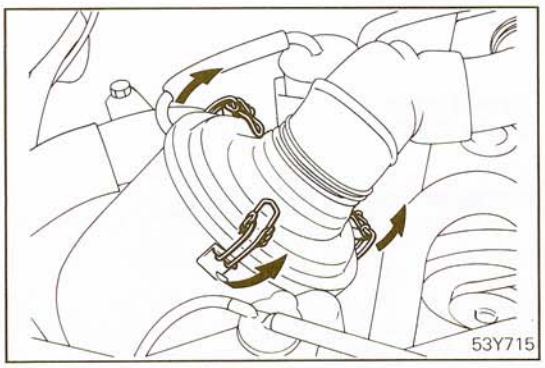

(1) Unclamp and remove the cleaner cover.

Caution
Remove the air cleaner cover, paying attention to the air flow sensor attached to the cover.

(2) Take out the air filter.
(3) Set a new air cleaner filter and clamp the cleaner cover.

CRANKCASE EMISSION CONTROL SYSTEM (PCV valve) (Clean) N00SALA

The crankcase ventilation system must be kept clean to maintain good engine performance.
Periodic servicing is required to remove combustion products from the PCV valve.

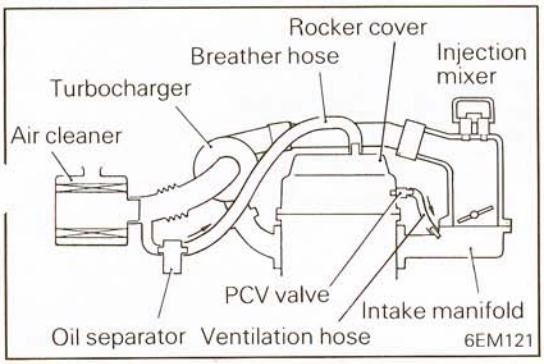

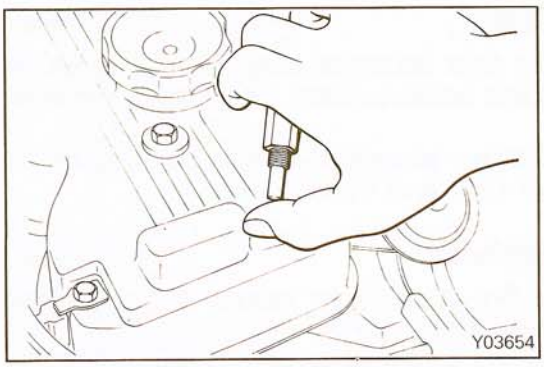

(1) Disconnect the ventilation hose from the positive crankcase ventilation (PCV) valve. Then, remove PCV valve from the rocker cover and reconnect it to the ventilation hose.
(2) Idle the engine and put a finger to the open end of PCV valve to make sure that intake manifold vacuum is felt on the finger.

NOTE
At this time, the plunger inside the PCV valve moves back and forth.

(3) If vacuum is not felt on finger, clean the PCV valve and ventilation hose in cleaning solvent or replace if necessary.

EVAPORATIVE EMISSION CONTROL SYSTEM (Check for leaks and clogging) – except canisters

N00SAMA

(1) If the fuel-vapor vent line is clogged or damaged, fuel-vapor mixture escapes into the atmosphere causing excessive emissions. Disconnect the line at both ends, and blow it clean with compressed air. Remove the filler cap from the filler pipe and check to see if there is evidence that the packing makes improper contact to the filler pipe.
(2) The overfill limiter (2-way valve) installed on the vapor line between the canister inlet and fuel tank outlet should be checked for correct operation.

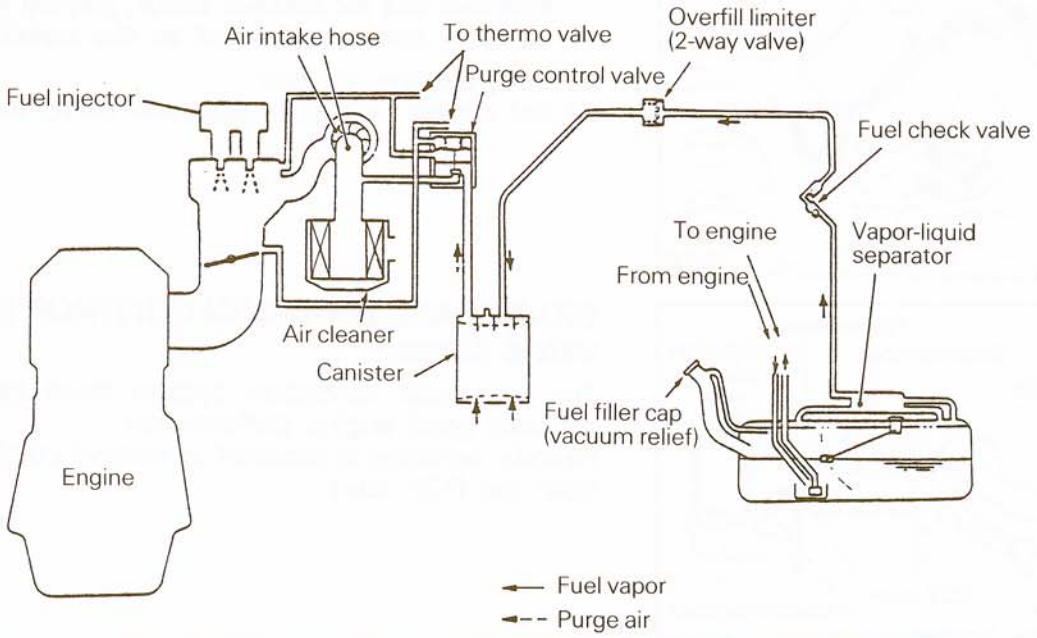

5EN026

CANISTER (Replace)

N00SANA

If or when the canister filter becomes clogged, the purge air volume will decrease and consequently, the canister capacity will be reduced.
For removal and installation procedures, refer to GROUP 14 FUEL SYSTEM – Fuel Line and Vapor Line.

SPARK PLUGS (Replace)

N00SAOA

(1) Spark plugs must fire properly to assure proper engine performance and emission-control.
Therefore, they should be replaced periodically with new ones.
(2) The new plugs should be checked for the proper gap.

Spark plug gap:
NGK, CHAMPION
1.0 – 1.1 mm (0.039 – 0.043 in.)
NIPPON DENSO
0.9 – 1.0 mm (0.035 – 0.039 in.) or
1.0 – 1.1 mm (0.039 – 0.043 in.)

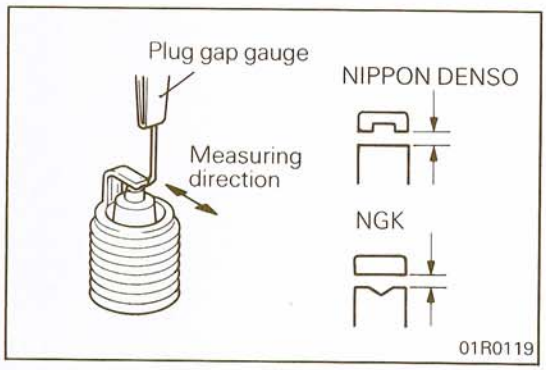

01R0119

STB Revision

IGNITION CABLES (Replace) N00SAPA

The ignition cables should be replaced periodically with new ones. After replacing, make sure that the ignition cables and terminals are properly connected and fully seated.

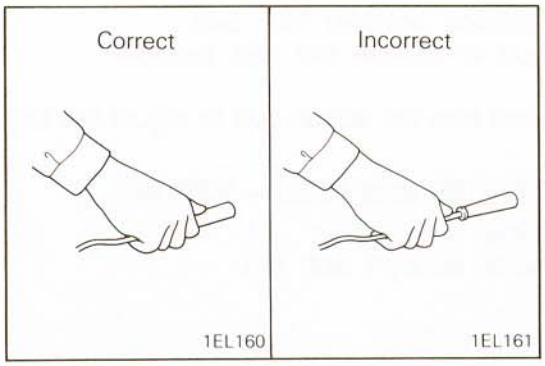

NOTE
When disconnecting an ignition cable, be sure to hold cable cap. If the cable is disconnected by pulling on the cable alone, an open circuit might result.

OXYGEN SENSOR (Replace) N00SAQA

The oxygen sensor is a device which controls the fuel mixture. If the oxygen sensor is damaged, the exhaust-gas cleaning effect as well as driveability deteriorates. Therefore, it should be replaced periodically with a new one.

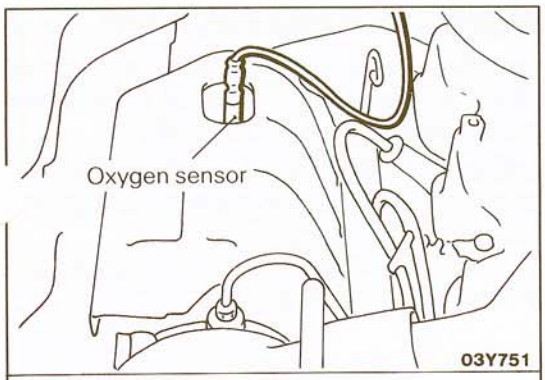

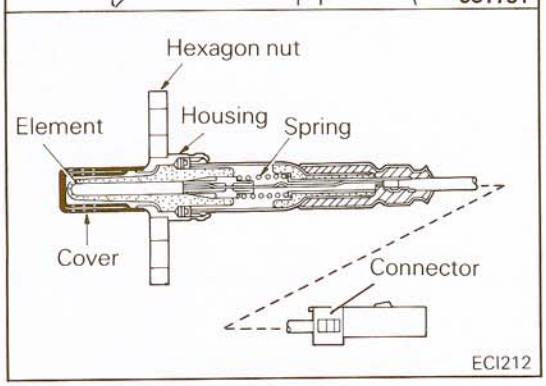

DRIVE BELT (Replace) N00SBBA

Replace the drive belts with new ones, and make sure there is no interference between the belt and other engine components.
Then, check the tension of the belt for the water pump and alternator. The deflection of the belt must be specified listed below when depressed at a point midway between the water pump pulley and the alternator pulley with a force of 100 N (22 lbs.).

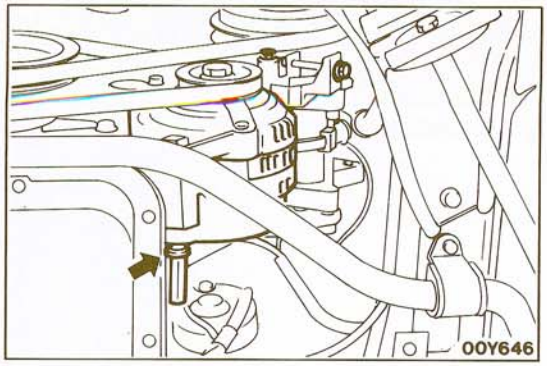

(1) Remove the air conditioner compressor belt and/or power steering oil pump belt if equipped.
(2) Loosen the alternator support bolt nut.

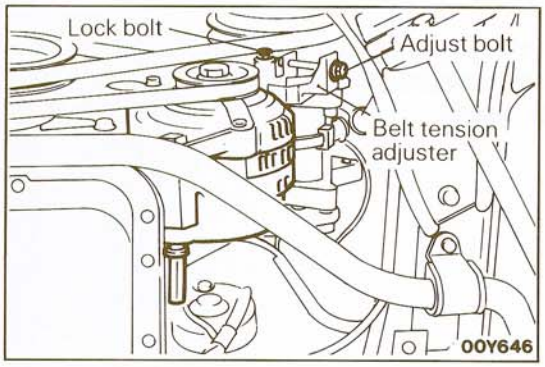

(3) Loosen the belt tension adjuster lock bolt.
(4) Turn the adjust bolt to reduce the belt tension.
(5) Remove the belt.
(6) Install a new belt and turn the adjust bolt to adjust the belt tension.

Standard value: 7 – 10 mm (0.28 – 0.39 in.)

(7) Tighten the lock bolt.
(8) Tighten the alternator support bolt nut.

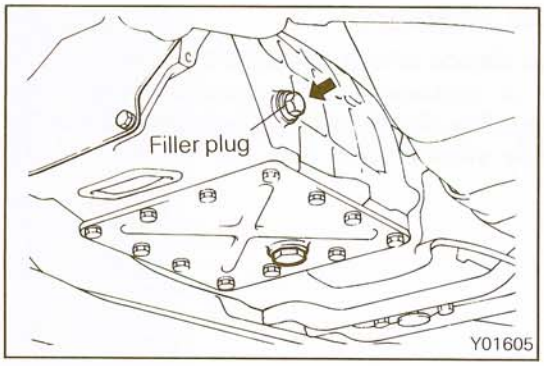

MANUAL TRANSMISSION (Inspect oil level) N00SBCD

Inspect each component for evidence of leakage, and check the oil level by removing the filler plug. If the oil is contaminated, it is necessary to replace it with new oil.

(1) With the vehicle parked at a level place, remove the filler plug and make sure that the oil is at the same level as the lower surface of the threaded hole.
(2) Check to see that transmission fluid is free of excessive contamination and has proper viscosity.

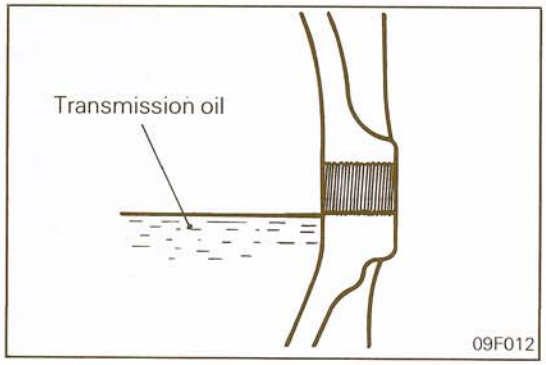

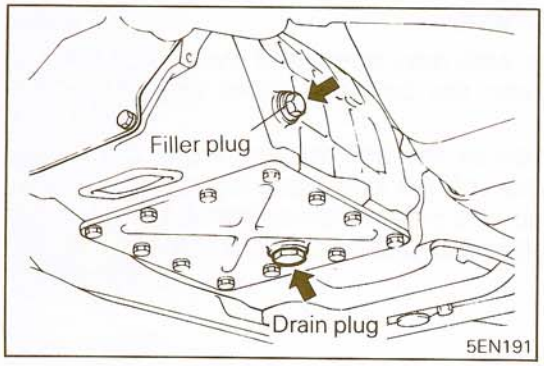

TRANSMISSION FLUID (Replace)

(1) With the vehicle parked at a level place, remove the oil drain plug to drain transmission fluid.
(2) Replace packing with a new one and install the oil drain plug.
(3) Pour transmission fluid in the filler plug hole until the fluid is at the same level as the bottom of the plug hole.

Total transmission fluid capacity:
2.3 lit. (2.4 U.S.qts., 2.0 Imp.qts.)

AUTOMATIC TRANSMISSION (Change fluid)

N00SBDC

Drain the fluid and check whether there is any evidence of contamination.
Refill with new fluid after the cause of any contamination has been corrected.

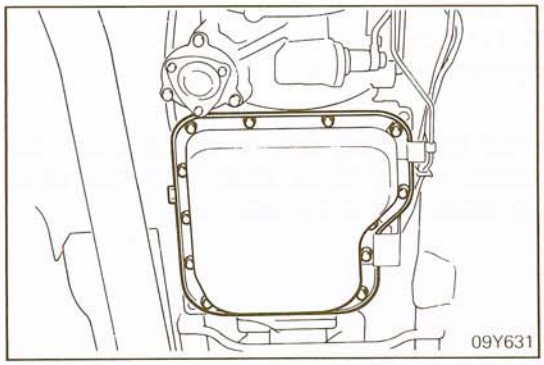

(1) Loosen the oil pan screws and tap the oil pan at one corner to break it loose and allow automatic transmission fluid to drain.
(2) Drain automatic transmission fluid remaining in bottom of oil pan after its removal.
(3) Install oil pan with new gasket and tighten oil pan screws, 6 to 8 Nm (4.4 to 5.7 ft.lbs.).

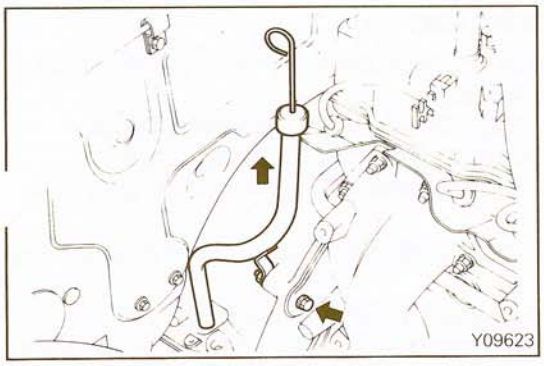

(4) Pour 5 liters (5.3 U.S.qts., 4.4 Imp.qts.) of "DEXRON II" ATF into case through dipstick hole. [Total quantity of ATF required is approx. 7.0 liters (7.4 U.S.qts., 6.2 Imp.qts.). Actually however, approx. 5.5 liters (5.8 U.S.qts., 4.8 Imp.qts.) of fluid can be replaced because rest of fluid remains in torque converter.]
(5) Start engine and allow to idle for at least two minutes. Then, with parking brake on, move selector lever momentarily to each position, ending in "N" Neutral position.

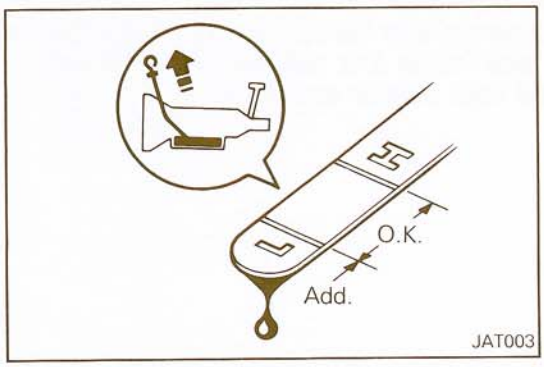

(6) Add sufficient ATF to bring fluid level to lower mark. Recheck fluid level after transmission is at normal operating temperature.
Fluid level should be between upper and lower marks. Insert dipstick fully to prevent dirt from entering transmission.

COOLING SYSTEM (Check and service as required)

N00SBEA

Check the cooling system parts, such as radiator, heater, and oil cooler hoses, thermostat and connections for leakage and damage.

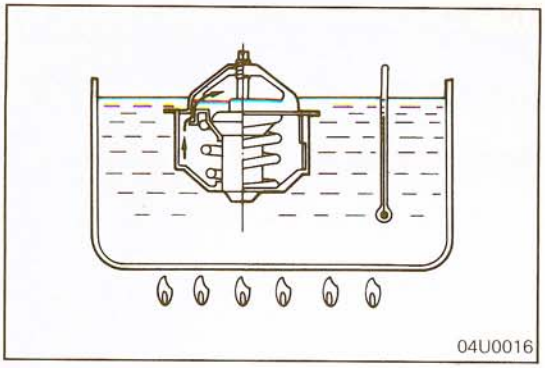

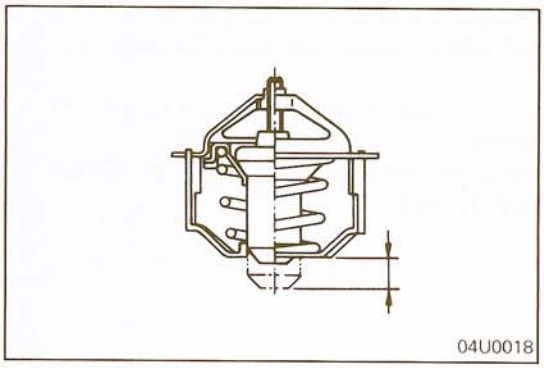

THERMOSTAT (Inspect)

(1) Remove the thermostat.
(2) Replace the thermostat if the valve is open even slightly.
(3) Replace if greatly deformed, damaged or broken.
(4) Remove rust and fur from the valve if found on the valv
(5) Fill a container with water and immerse the thermostat. While stirring water, increase water temperature and check to see that thermostat valve opening temperature and full-open temperature [valve lift at full open position is 8 mm (0.3 in.) or more.] are as specified below.

Standard value:
Valve opening temperature
88 ± 1.5°C (190 ± 3°F)
Full-open temperature 100°C (212°F)

NOTE
Valve lift is calculated by finding difference between the valve height measured at full-close state and the valve height measured at full-open temperature.

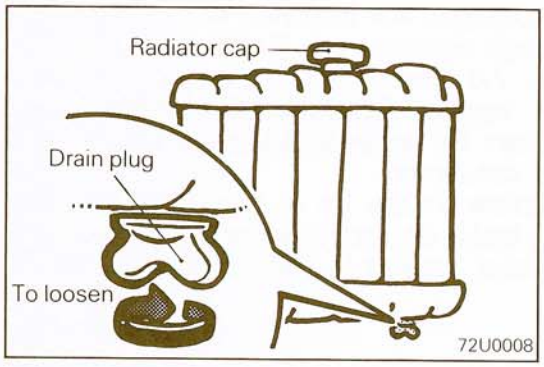

REPLACE ENGINE COOLANT

(1) Set the temperature control lever to the hot position.
(2) Remove the radiator cap.
(3) Loosen the drain plug to drain the engine coolant.
(4) Drain the engine coolant from the reserve tank.
(5) After draining the engine coolant, tighten the drain plu securely.
(6) Supply the engine coolant into the radiator until it is filled up to its filler neck.
(7) Supply the engine coolant into the reserve tank.
(8) After warming the engine until the thermostat opens, remove the radiator cap and check the engine coolant level.
(9) Supply the engine coolant into the radiator until it is filled up to its filler neck, and install the radiator cap securely.
(10) Fill the reserve tank with engine coolant up to the "FULL" line.

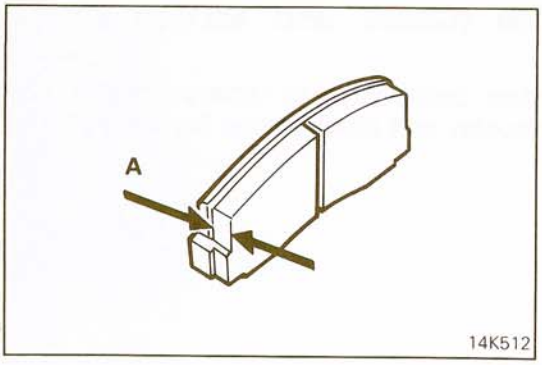

DISC BRAKE PADS (Inspect for wear) N00SBFB

Check for fluid contamination and wear. Replace complete set of pads if defective.

Caution
The pads for the right and left wheels should be replaced at the same time. Never "split" or intermix brake pad sets. All four pads must be replaced as a complete set.

Thickness of lining (A):
Limit 1.0 mm (0.04 in.)

BRAKE HOSES (Check for deterioration or leaks)

N00SBHA

Inspection of brake hoses and tubing should be included in all brake service operations.
The hoses should be checked for:
(1) Correct length, severe surface cracking, pulling, scuffing or worn spots. (If the fabric casing of the hoses is exposed by cracks or abrasion in the rubber hose cover, the hoses should be replaced. Eventual deterioration of the hose may occur, with possible bursting failure.)
(2) Faulty installation, casing twisting or interference with wheel, tire or chassis.

BRAKE FLUID (Replace) – including the clutch fluid

N00SBIA

(1) Check the brake and clutch system for leakage before replacing brake fluid. Completely drain the brake fluid with the bleeder screws loosened on each system and refill the brake and clutch system with new brake fluid.

Specified brake fluid: DOT 3

(2) The reservoir cap must be fully tightened to avoid contamination from foreign matter or moisture.

DO NOT ALLOW PETROLEUM BASE FLUID TO CONTAMINATE THE BRAKE FLUID – SEAL DAMAGE WILL RESULT.

Caution
Take care in handling brake fluid as it is harmful to the eyes and may also cause damage to painted surfaces.

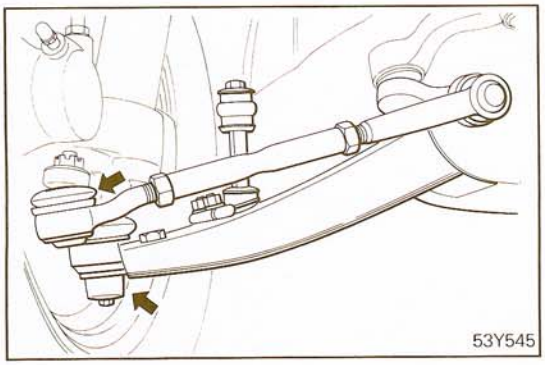
53Y545

BALL JOINT, STEERING LINKAGE SEALS AND DRIVE SHAFT BOOTS (Inspect for grease leaks and damage)

N00SBJA

(1) These components, which are permanently lubricated at the factory, do not require periodic lubrication. Damaged seals and boots should be replaced to prevent leakage or contamination of the grease.
(2) Inspect the dust cover and boots for proper sealing, leakage and damage. Replace them if defective.

FRONT WHEEL BEARINGS (Inspect for grease leaks)

N00SBKE

Inspect for evidence of grease leakage around the hub cap and the back of the hub. If there is leakage of grease, remove the hub and inspect its oil seal for damage. Clean the grease off the hub and bearing, and repack with specified new grease.

Specified grease: Multipurpose grease SAE J310, NLGI No. 2

EXHAUST SYSTEM (CONNECTION PORTION OF MUFFLER PIPINGS AND KEEPING WARMTH COVERS) (Check and service as required) N00SBLA

(1) Check for holes and gas leaks due to damage, corrosion etc.
(2) Check the joints and connection for looseness and gas leaks.
(3) Check the hanger rubber and brackets for damage.

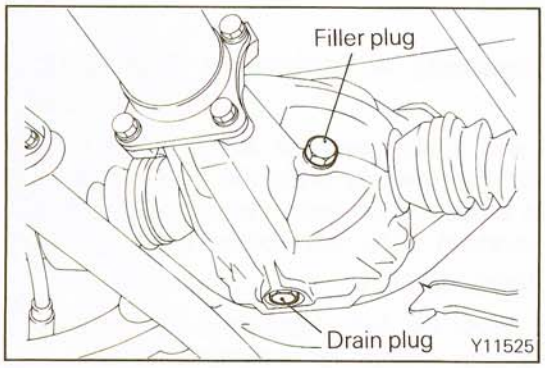

REAR AXLE N00SBQB

INSPECT OIL LEVEL

Remove the filler plug and inspect the oil level at bottom of filler hole. If the oil level is at or slightly below the filler hole, it is in satisfactory condition.

CHANGE OIL

Before changing the rear axle oil, check to make sure that there is no oil leakage from the rear axle housing.
Remove the drain plug and drain out all of the oil.
Put the oil plug back in place, and then pour new oil in through the filler hole.

FRONT SUSPENSION

CONTENTS

FRONT AXLE HUB 8

FRONT CROSSMEMBER 25

GENERAL INFORMATION 2

LOWER ARM AND KNUCKLE ARM 19

SERVICE ADJUSTMENT PROCEDURES 6

- Front Wheel Alignment 6
- Wheel Bearing Alignment 6

SPECIAL TOOLS 5

SPECIFICATIONS 3

- General specifications 3
- Lubricants 4
- Service Specifications 3
- Torque Specifications 4

STABILIZER BAR AND STRUT BAR 23

STRUT ASSEMBLY 12

GENERAL INFORMATION

N02BAAB

The front suspension is McPherson strut type independent suspension that is simple in construction and light in unsprung weight.
The top end of the strut is supported in the wheel house via an insulator and the bottom end is supported the lower arm via knuckle arm and ball joint.

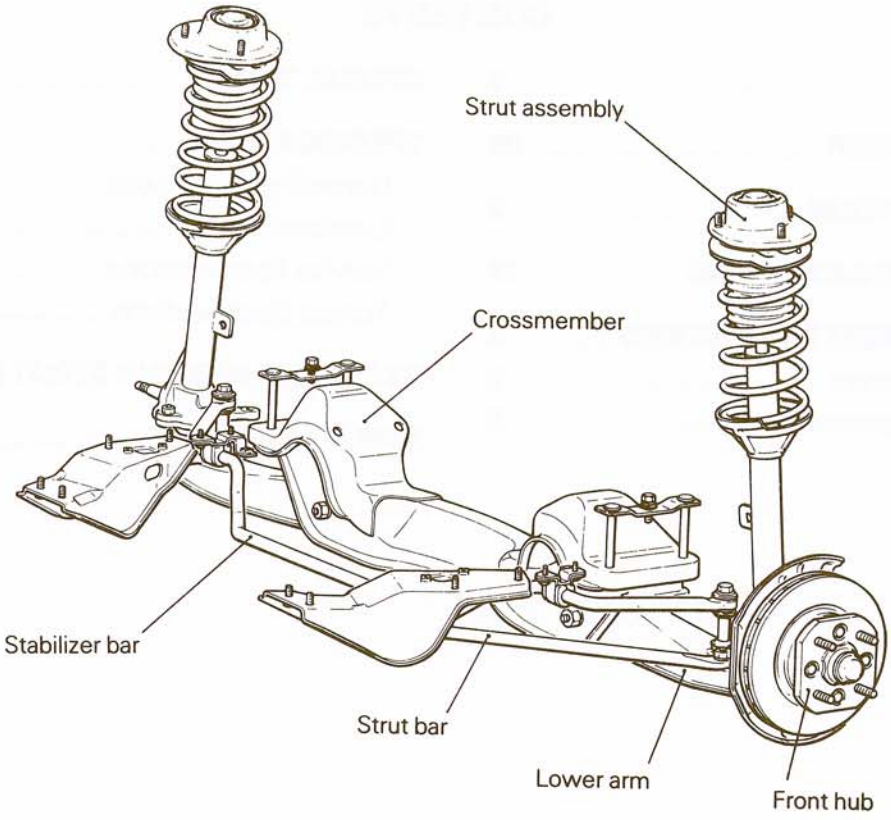

12Y238

SPECIFICATIONS

N02CA- -

GENERAL SPECIFICATIONS

tems	A187AMNXL A187AMRXL	A187AMNFGL	A187AMNFGL (Option)
Suspension system	McPherson strut type	McPherson strut type	McPherson strut type
Coil spring			
Wire dia. x O.D. x free length mm (in.)	12.8 x 142.8 x 339 (0.50 x 5.62 x 13.35)	12.8 x 142.8 x 346 (0.50 x 5.62 x 13.62)	12.8 x 142.8 x 327 (0.50 x 5.62 x 12.87)
Shock absorber			
Type	Hydraulic, cylindrical, double-acting type	Hydraulic, cylindrical, double-acting type	Gas damper type
Max. length mm (in.)	623 (24.5)	620 (24.4)	620 (24.4)
Stroke mm (in.)	169 (6.7)	155 (6.1)	155 (6.1)
Stabilizer bar			
Outside diameter mm (in.)	19 (0.75)	19 (0.75)	19 (0.75)
Front axle hub bearing			
Type	Taper roller bearing	Taper roller bearing	Taper roller bearing
Dimensions (O.D. x I.D.) mm (in.)			
Inner	59.1 x 31.8 (2.33 x 1.25)	59.1 x 31.8 (2.33 x 1.25)	59.1 x 31.8 (2.33 x 1.25)
Outer	45.2 x 19.1 (1.78 x 0.75)	45.2 x 19.1 (1.78 x 0.75)	45.2 x 19.1 (1.78 x 0.75)

;ERVICE SPECIFICATIONS

N02CB- -

Items	Specifications
Standard value	
Toe-in mm (in.)	
Recommended setting	0
Acceptable range	5 (0.2) toe-in to 5 (0.2) toe-out
Camber	–0°30′
Caster	5°50′
Protruding length of stabilizer bar installation bolt mm (in.)	15 – 17 (0.59 – 0.67)
Ball joint starting torque Ncm (in.lbs.)	500 – 800 (43 – 69)
Limit	
Piston rod O.D. mm (in.)	21.95 (0.8642)

TORQUE SPECIFICATIONS

N02CC- -

Items	Nm	ft.lbs.
Front hub to brake disc	35 – 40	25 – 29
Strut insulator to body	25 – 35	18 – 25
Shock absorber ring nut	140 – 150	101 – 108
Strut top end nut	60 – 70	43 – 51
Strut bar bracket to frame	35 – 45	25 – 33
Stabilizer bar bracket	8 – 12	6 – 9
Stabilizer bar to lower arm	10 – 20	7 – 14
Strut bar to strut bar bracket	75 – 85	54 – 61
Strut bar to lower arm	60 – 70	43 – 51
Lower arm shaft (bolt)	80 – 95	58 – 69
Knuckle arm to ball joint	60 – 72	43 – 52
Knuckle arm to McPherson strut assembly	80 – 100	58 – 72
Lower arm to ball joint	60 – 70	43 – 51
Crossmember to body	60 – 80	43 – 58

LUBRICANTS

N02CD- -

Items	Specified lubricant	Quantity
Front hub and ball joint	Multipurpose grease SAE J310, NLGI No. 2	As required
Front hub inner bearing	Multipurpose grease SAE J310, NLGI No. 2	As required
Front hub outer bearing	Multipurpose grease SAE J310, NLGI No. 2	As required
Oil seal lip	Multipurpose grease SAE J310, NLGI No. 2	As required
Shock absorber fluid	Repair kit fluid	Vehicles without intercooler 420 cc (25.63 cu.in.) Vehicles with intercooler 440 cc (26.85 cu.in.)

SPECIAL TOOLS

N02DA--

Tool (Number and name)	Use	Tool (Number and name)	Use
MB990639-01 Wheel alignment gauge attachment 	Measurement of the wheel alignment for the aluminum type wheel	MB990799-01 Ball joint remover and installer A 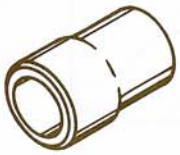	Installation of the dust cover and lower control arm bushing
MB990925-01 Bearing and oil seal installer disc set  MB990938-01 Handle 	Installation of the hub bearing outer races and oil seal	MB990828 Lower control arm bushing remover and installer 	Removal and installation of the ball joints and the lower control arm bushing
MB990241-01 Axle puller 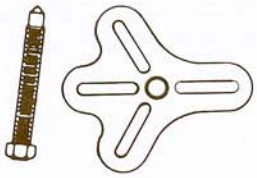	Removal of the knuckle arm	MB990868-01 Front lower control arm bushing installer support 	
MB990987 Spring compressor 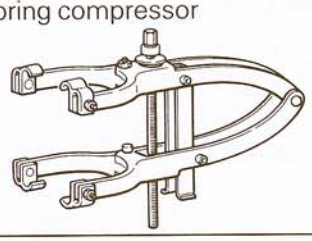	Compression of the front coil spring	MB990899-01 Spanner wrench 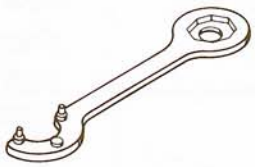	Removal and installation of the strut insulator and the shock absorber ring nut



SERVICE ADJUSTMENT PROCEDURES

N02FCAC

WHEEL BEARING ADJUSTMENT

(1) Inspect the play of the bearings while the vehicle is jacked up and resting on jack stands.
(2) If there is any play, remove the hub cap, cotter pin, and lock cap, and then loosen the nut.
(3) Tighten the nut by the following procedure.

Tighten to 20 Nm (14 ft.lbs.)
↓
Loosen to 0 Nm (0 ft.lbs.)
↓
Retighten to 5 Nm (4 ft.lbs.)

(4) Install the lock cap and cotter pin. If the position of the cotter pin is not matched with the holes of the lock cap, reposition the lock cap so that the holes align. If this cannot be accomplished, back off the nut by not more than 15°, align lock cap and install cotter pin.

FRONT WHEEL ALIGNMENT

N02FBAG

NOTE
The front suspension assembly must be free of worn, loose or damaged parts prior to measurement of front wheel alignment.

CAMBER

Camber is pre-set at the factory and cannot be adjusted.

NOTE
If camber is not within specifications, replace bent or damaged parts.

Standard value: –0°30'

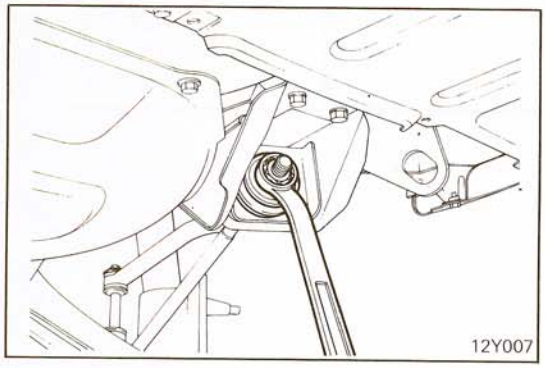

CASTER

Caster, as a rule, requires no adjustment, although it is slightly adjustable by means of the threaded end of the strut bar.

Standard value: 5°50'

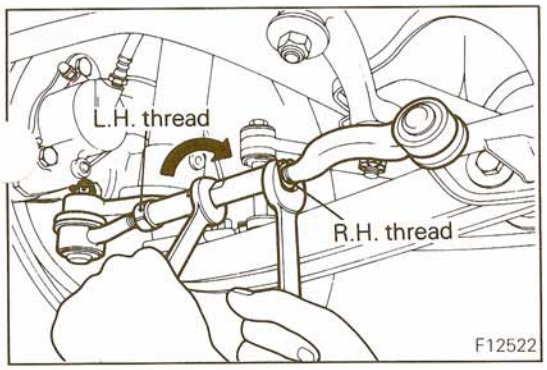

TOE-IN

If the toe-in is not within the standard value, make adjustment of the toe-in by using the turnbuckle of the left tie rod. Toe-in increases when the turnbuckle is turned in the direction of the arrow in the illustration. The difference in the length between right and left tie rods should not exceed 5 mm (0.2 in.). If the difference exceeds 5 mm (0.2 in.), remove the right tie rod from the knuckle and adjust its length so that the difference is within 5 mm (0.2 in.).

Then make adjustment of toe-in. Toe-in changes by about 15 mm (0.59 in.) when the turnbuckle of the left tie rod is turned once.

Standard value:

Recommended setting 0 mm (0 in.)

Acceptable range

5 mm (0.2 in.) toe-in – 5 mm (0.2 in.) toe-out

FRONT AXLE HUB

N02KA- -

REMOVAL AND INSTALLATION

Vehicles without an intercooler

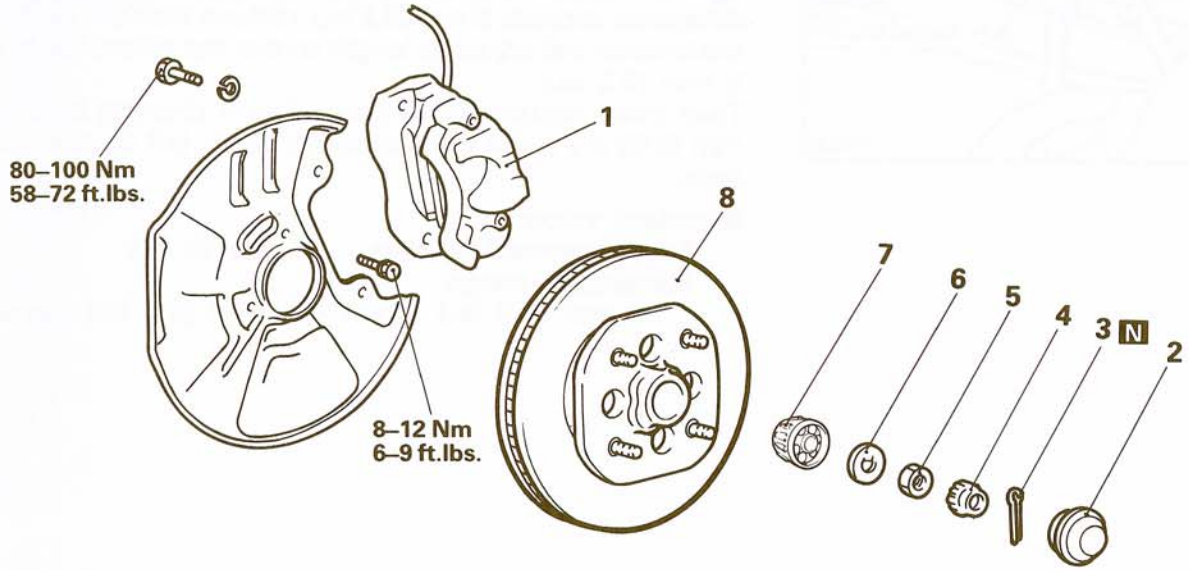

12Y730

Vehicles with an intercooler

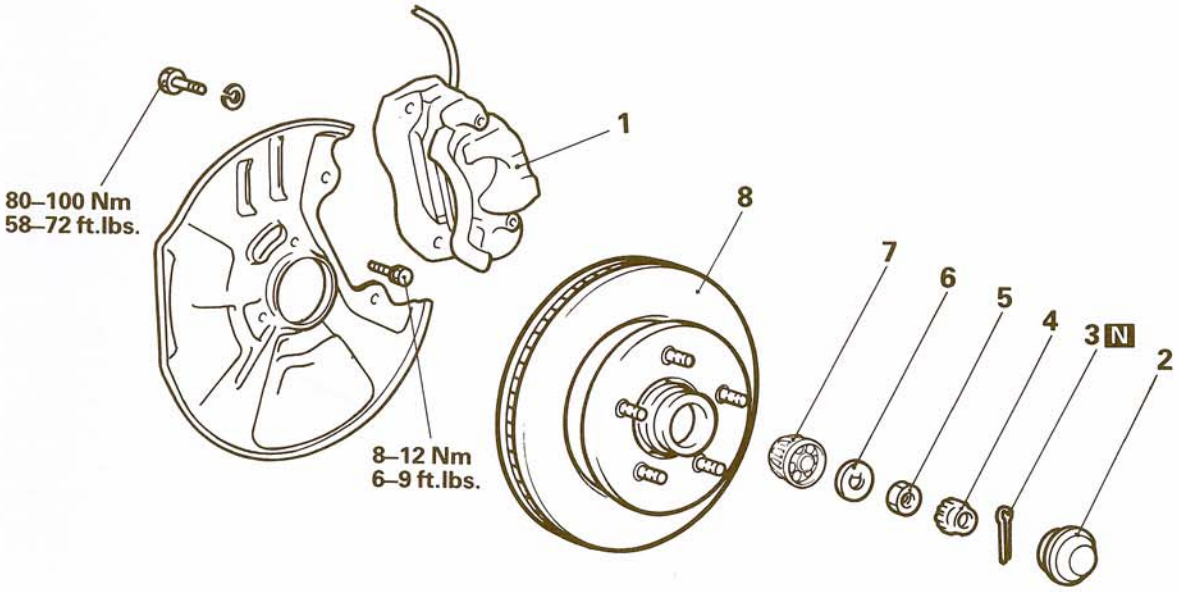

12Y729

Removal steps

◆◆ 1. Front brake assembly
2. Hub cap
3. Cotter pin
◆◆ 4. Lock cap
◆◆ Adjustment of wheel bearing
5. Nut
6. Washer
7. Outer bearing
8. Front axle hub assembly

NOTE
(1) Reverse the removal procedures to reinstall.
(2) ◆◆: Refer to "Service Points of Removal".
(3) ◆◆: Refer to "Service Points of Installation".
(4) N: Non-reusable parts

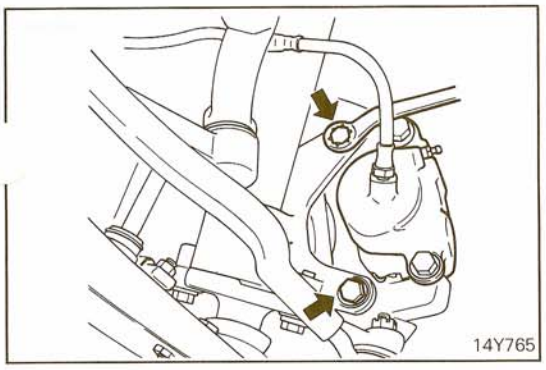

SERVICE POINT OF REMOVAL N02KBAB

1. REMOVAL OF FRONT BRAKE ASSEMBLY

Remove the front brake assembly with the brake hose connected.

NOTE
To prevent the brake hose from being twisted, suspend the brake assembly with wires.

INSPECTION N02KCAB

- Check the oil seals for crack and damage.
- Check the bearings for seizure, discolouration and roughened raceway surface.
- Check the front axle hub for cracks.

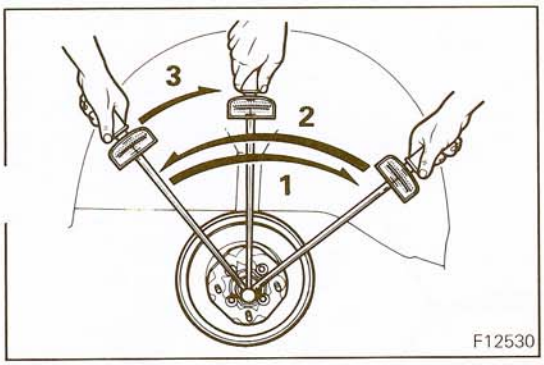

SERVICE POINTS OF INSTALLATION N02KDAC

- **ADJUSTMENT OF WHEEL BEARING**

Tighten the nut by the following procedure.

(1) Tighten to 20 Nm (14 ft.lbs.)
↓
(2) Loosen to 0 Nm (0 ft.lbs.)
↓
(3) Retighten to 5 Nm (4 ft.lbs.)

4. INSTALLATION OF LOCK CAP

Install the lock cap and cotter pin. If the position of the cotter pin is not matched with the holes of the lock cap, reposition the lock cap so that the holes align. If this cannot be accomplished, back off the nut not more than 15°. Align lock cap and install cotter pin.

DISASSEMBLY AND REASSEMBLY

N02HA- -

Vehicles without an intercooler

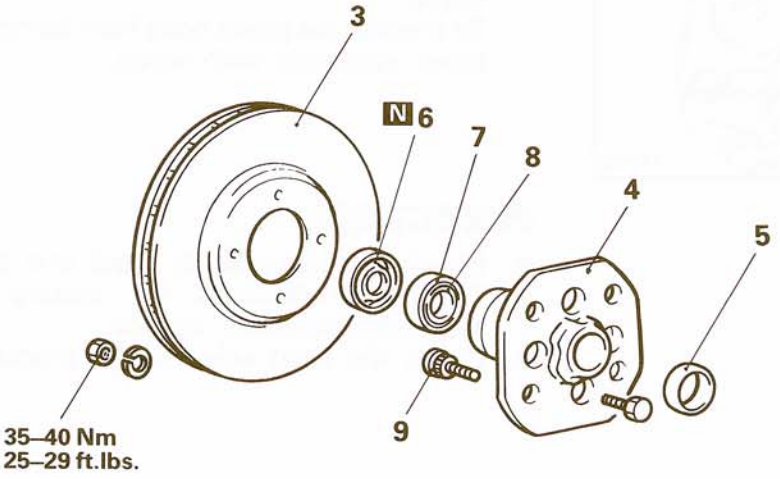

12Y727

Vehicles with an intercooler

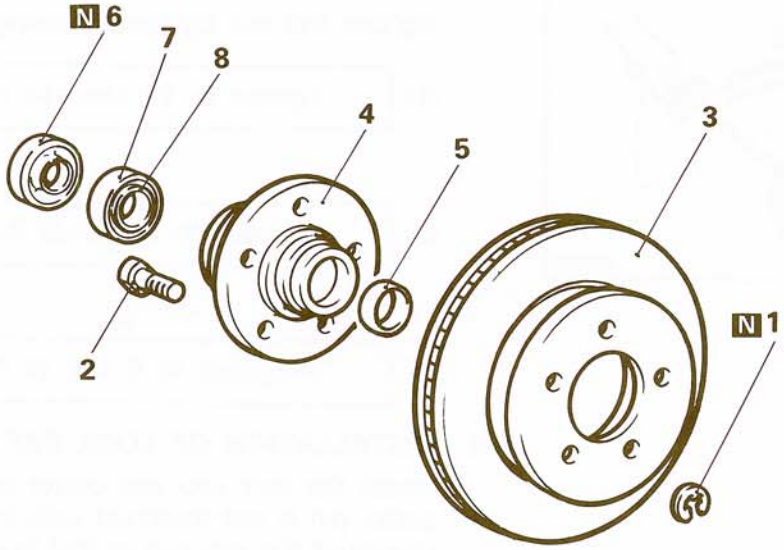

12Y728

Disassembly steps

1. Snap ring (for vehicles with an intercooler)
2. Hub bolts (for vehicles with an intercooler)
3. Brake disc
4. Front axle hub
5. Outer bearing inner race
6. Oil seal
7. Inner bearing
8. Inner bearing inner race
9. Hub bolts (for vehicles without an intercooler)

NOTE
(1) Reverse the disassembly procedures to reassemble.
(2) ◆◆: Refer to "Service Points of Disassembly".
(3) ◆◆: Refer to "Service Points of Reassembly".
(4) N: Non-reusable parts

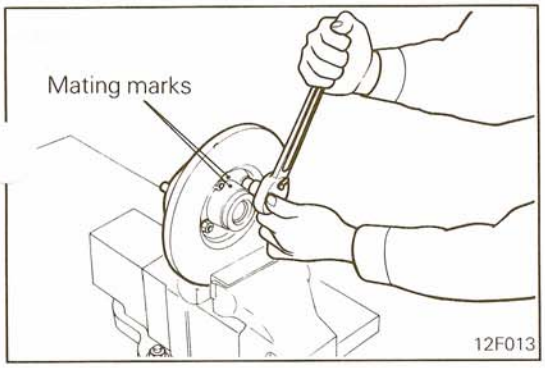

SERVICE POINT OF DISASSEMBLY N02HBAB

3. REMOVAL OF BRAKE DISC

Make the mating marks on the brake disc and front hub, and then separate the front axle hub and brake disc, if necessary.

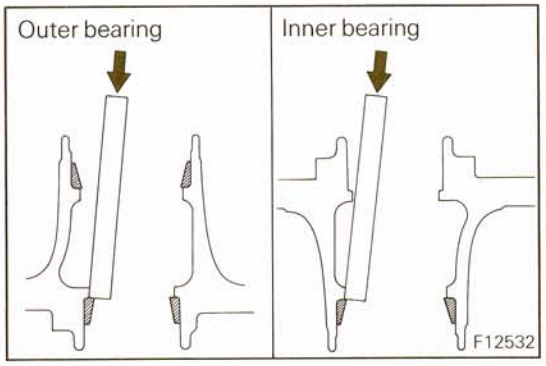

REPLACEMENT OF BEARING N02HDAF

(1) Remove the oil seal and inner bearing.
(2) Drive out the bearing outer races by tapping them uniformly.

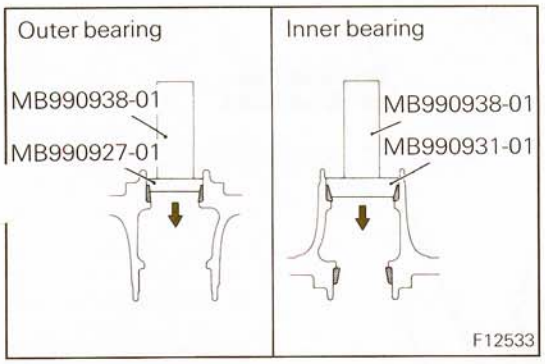

(3) Press-fit the bearing outer races with the special tools.
(4) Properly pack the bearing with specified grease and install into hub.

Specified grease: Multipurpose grease SAE J310, NLGI No. 2

NOTE
The bearing and outer race must be replaced as an assembly.

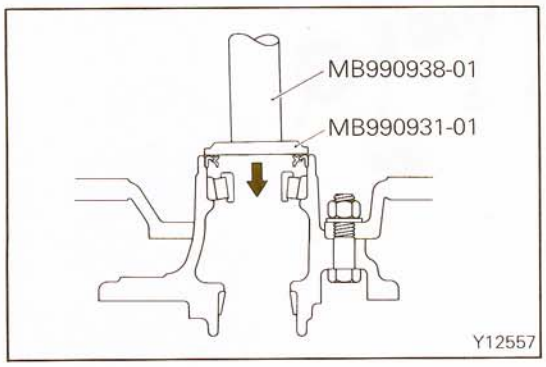

SERVICE POINT OF REASSEMBLY N02HEAF

6. INSTALLATION OF OIL SEAL

(1) Apply the specified grease to the oil seal lip and inside surface of the front axle hub.

Specified grease: Multipurpose grease SAE J310, NLGI No. 2

(2) Apply the specified grease to the inner bearing inner race and install the inner race into the front axle hub.

Specified grease: Multipurpose grease SAE J310, NLGI No. 2

(3) Press-fit the new oil seal into the front axle hub by using the special tools, until it is flush with the front axle hub end face.

STRUT ASSEMBLY

N02LA--

REMOVAL AND INSTALLATION

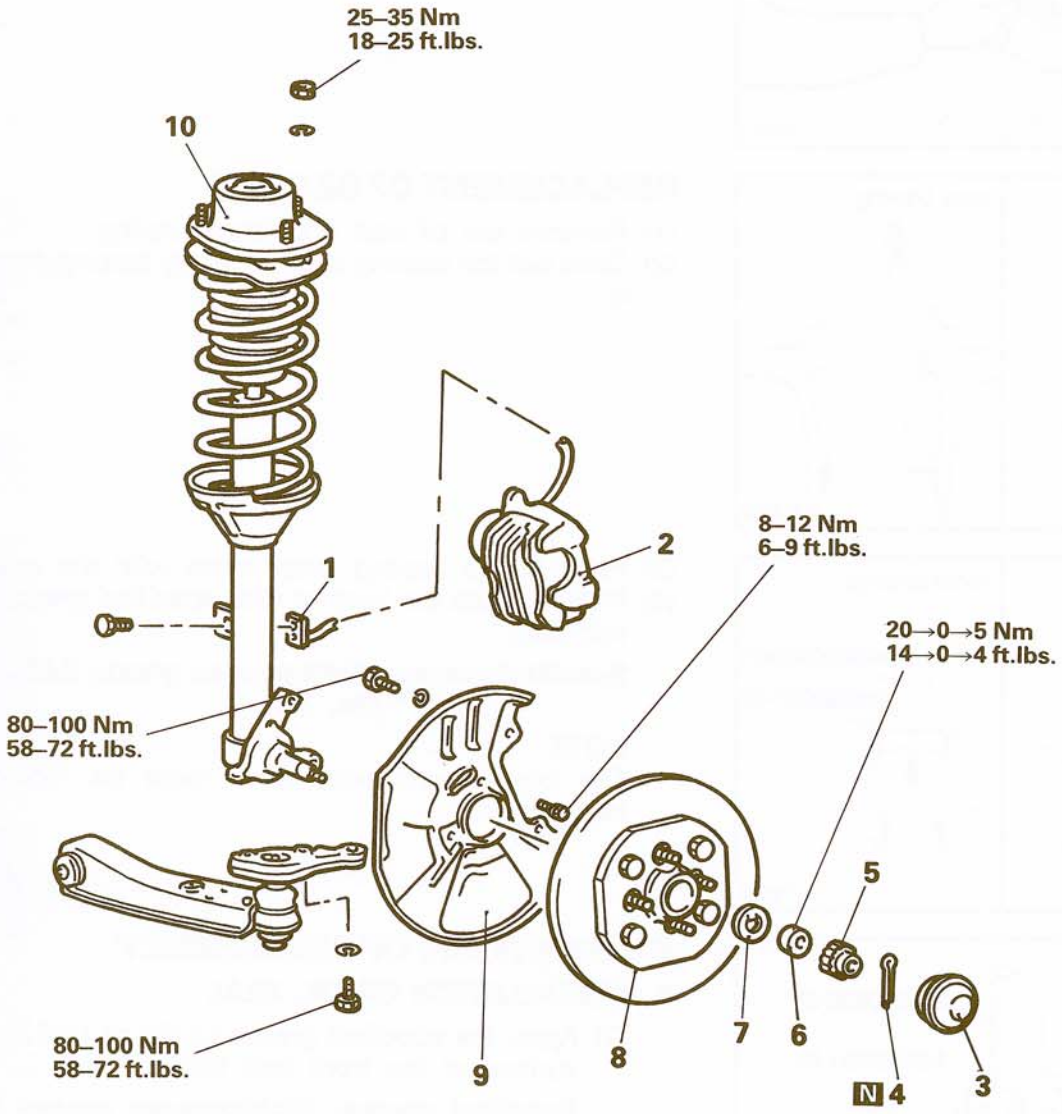

Removal steps

- ◆◆ 1. Brake plate
- ◆◆ 2. Front brake assembly
- 3. Hub cap
- 4. Cotter pin
- 5. Lock cap
- 6. Nut
- 7. Washer
- 8. Front axle hub assembly
- 9. Dust cover
- ◆◆ 10. Strut assembly

NOTE
(1) Reverse the removal procedures to reinstall.
(2) ◆◆: Refer to "Service Points of Removal".
(3) ◆◆: Refer to "Service Points of Installation".
(4) N: Non-reusable parts

12Y717

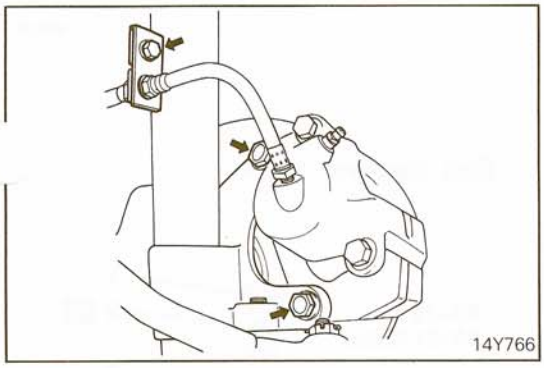
14Y766

SERVICE POINT OF REMOVAL N02LBAD

1. REMOVAL OF BRAKE PLATE / 2. FRONT BRAKE ASSEMBLY

Remove the brake plate from the strut and then remove brake attaching bolts. Raise the brake assembly and hold it in raised position using wires, etc.

Caution
Do not pull or kink the brake hose firmly.

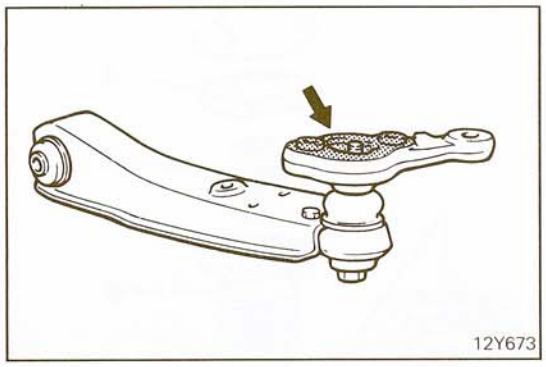
12Y673

SERVICE POINT OF INSTALLATION N02LDAD

10. STRUT ASSEMBLY

When the knuckle arm is installed to the strut, apply semi-drying sealant to the flange of the knuckle arm.

DISASSEMBLY AND REASSEMBLY

N02LE- -

Hydraulic type

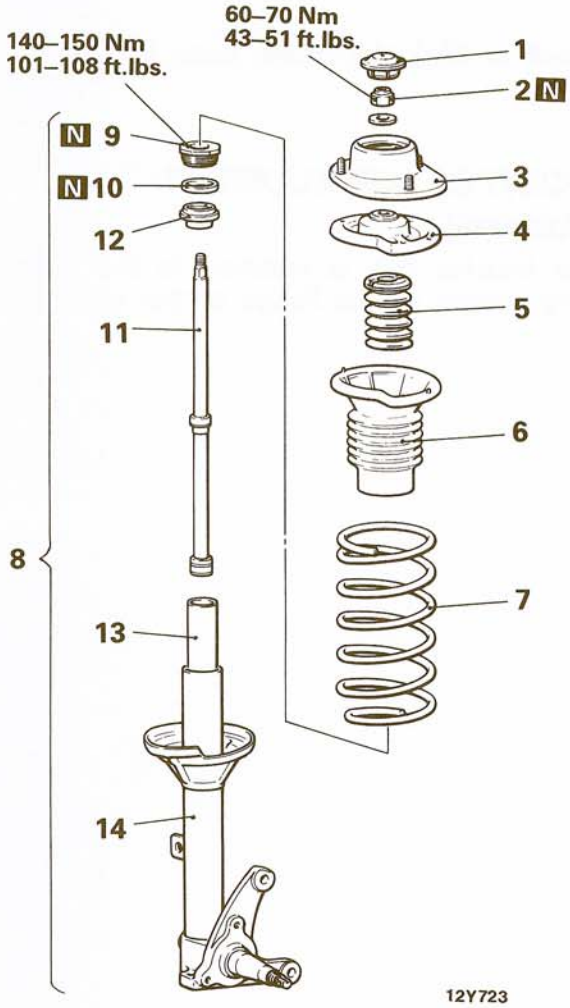

Gas damper type

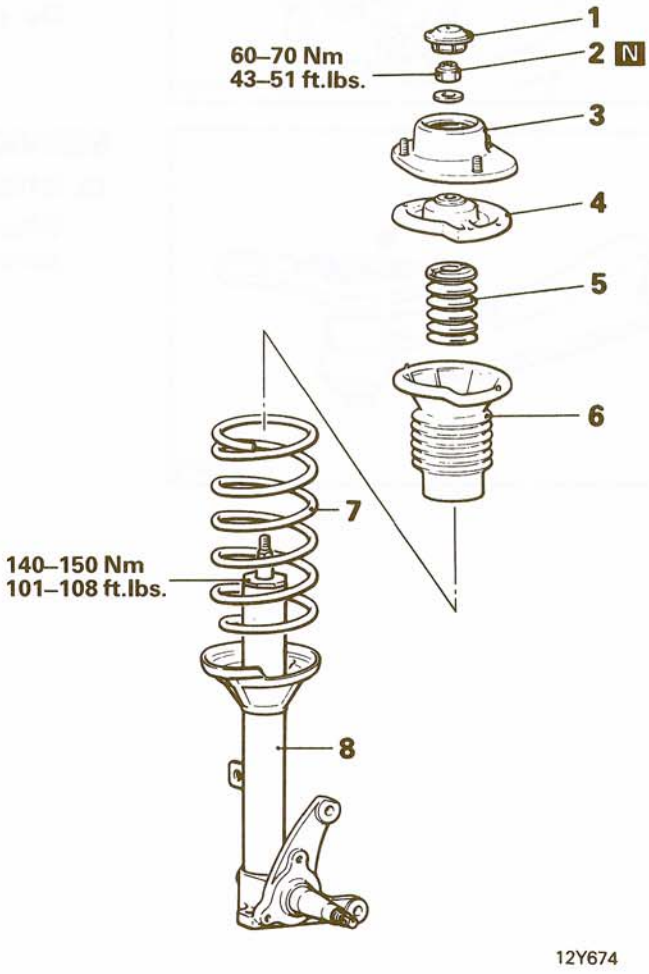

Disassembly steps

- 1. Insulator cap
- ◆◆ 2. Top end nut (Self locking nut)
- 3. Insulator
- 4. Spring seat
- 5. Rubber helper
- 6. Dust cover
- 7. Coil spring
- 8. Strut assembly
- ◆◆ 9. Oil seal assembly
- ◆◆ 10. Square section O-ring
- ◆◆ 11. Piston
- 12. Piston guide
- 13. Cylinder
- 14. Outer shell

Reassembly steps

- ◆◆ 14. Outer shell
- ◆◆ 13. Cylinder
- ◆◆ 11. Piston
- ◆◆ 12. Piston guide
- ◆◆ 10. Square section O-ring
- ◆◆ 9. Oil seal assembly
- 8. Strut assembly
- 7. Coil spring
- 6. Dust cover
- ◆◆ 5. Rubber helper
- ◆◆ 4. Spring seat
- ◆◆ 3. Insulator
- 2. Top end nut (Self locking nut)
- 1. Insulator cap

NOTE
(1) ◆◆: Refer to "Service Points of Disassembly".
(2) ◆◆: Refer to "Service Points of Reassembly".
(3) N: Non-reusable parts

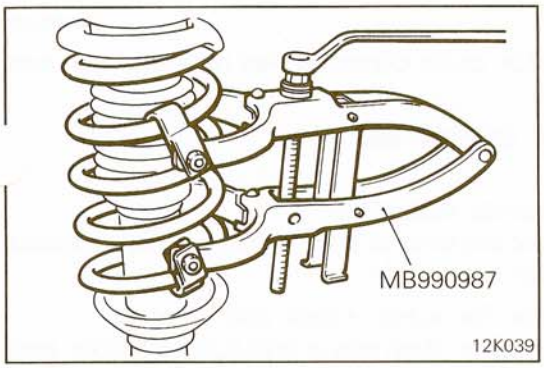

SERVICE POINTS OF DISASSEMBLY

N02LFAE

2. REMOVAL OF TOP END NUT

(1) Compress the coil spring with the special tool.
(2) Remove the insulator cap from the insulator.

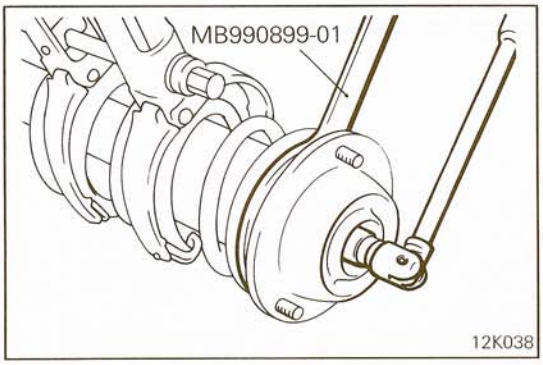

(3) While holding the spring seat with the special tool, remove the top end nut.

9. REMOVAL OF OIL SEAL ASSEMBLY

(1) To prevent entry of foreign material into the cylinder, shock absorber fluid, etc. during disassembly, thoroughly clean the external surface of the strut before disassembly.
(2) Lightly hold the strut upright in a vice, hanging down the piston rod to the bottom.

NOTE
When securing the strut in the vice, close the vice on the knuckle part, not the outer shell.

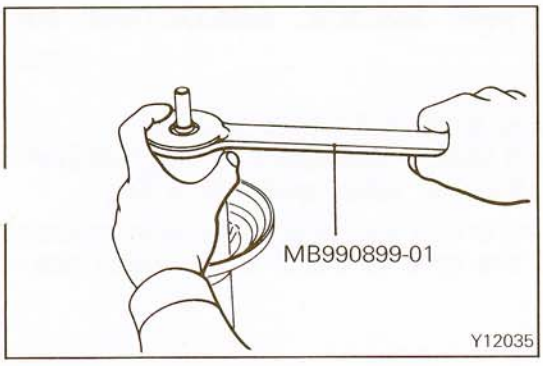

(3) Remove the oil seal assembly by using the special tool.

10. REMOVAL OF SQUARE SECTION O-RING

Remove the square section O-ring.

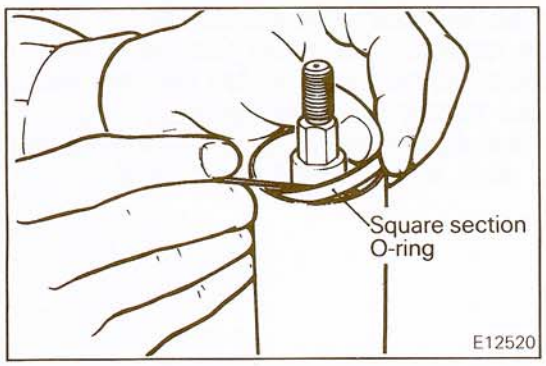

11. REMOVAL OF PISTON

(1) Slowly withdraw the piston rod from the cylinder together with the piston guide.

Caution
Because the piston rod has a highly precise surface, handle it carefully.

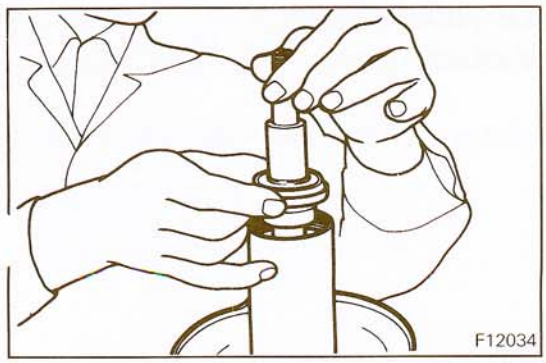

(2) Drain the shock absorber fluid.
(3) Remove the piston guide from the piston rod.
(4) Remove the cylinder from the strut outer shell.

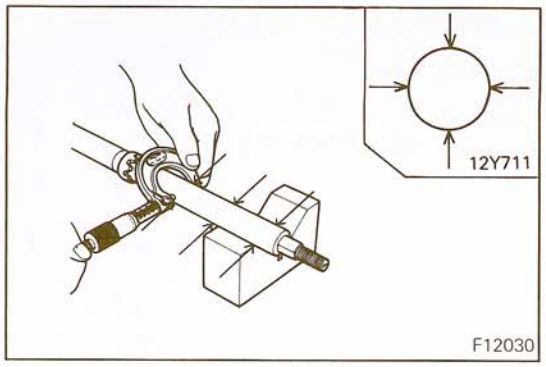

INSPECTION

N02LGAC

- Check that the piston outer diameter has not been reduced to specified limit.

  Limit: 21.95 mm (0.8642 in.)

  NOTE
  Measure at six points illustrated.
  If the value is below the limit at any of these points, replace the shock absorber assembly.
- Check the insulator for wear, crack and peeling.
- Check the rubber helper, dust cover and rubber helper seat for crack and damage.
- Check the coil springs for crack, damage and weakness.

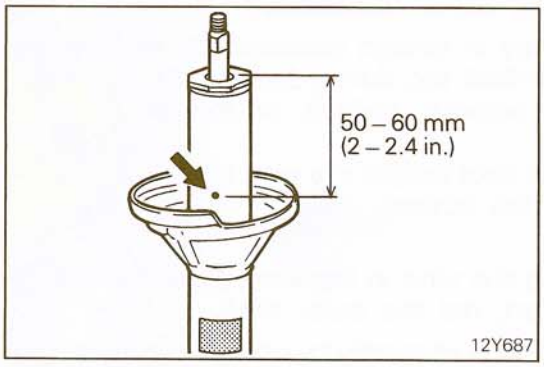

GAS DAMPER TYPE SHOCK ABSORBER REPLACEMENT

N02LIAB

Caution
The shock absorber is filled with nitrogen gas.
Do not disassemble it unless necessary for replacement.
Replace the shock absorber inner parts as a kit.

1. Drill a 4 mm (0.16 in.) or less diameter hole in the position of the illustration on the strut to bleed the nitrogen gas.

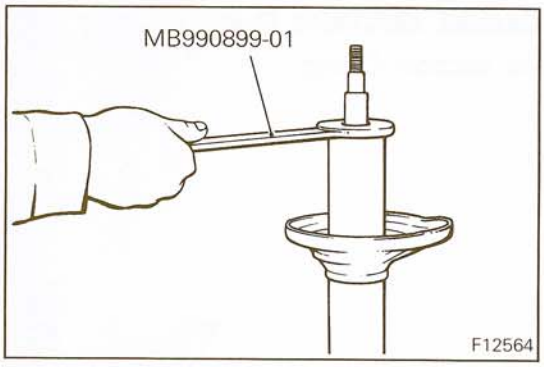

2. Remove the ring nut by using the special tool.
3. Remove the shock absorber assembly from the strut.
4. Install the new shock absorber assembly into the strut.
5. Tighten the ring nut to the specified torque.
6. Attach the label furnished with the shock absorber over the drilled hole in the strut to prevent entry of water.

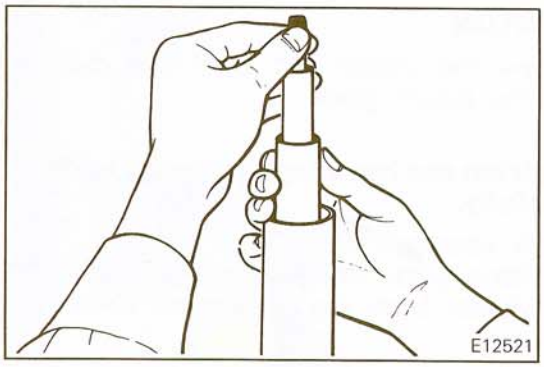

SERVICE POINTS OF REASSEMBLY

N02LHAE

14. INSTALLATION OF OUTER SHELL / 13. CYLINDER / 11. PISTON

(1) Install the cylinder and piston assembly into the strut outer shell.

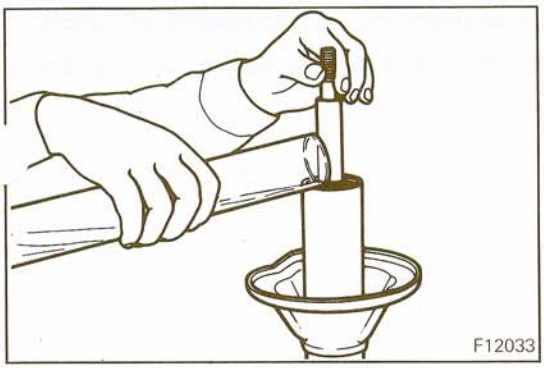

(2) Gradually pour shock absorber fluid into the cylinder while slowly moving the piston up and down.

NOTE
The above quantities are the capacities when the cylinder, piston and outer shell are completely dry. Be sure to take the amount of fluid adhering to the walls into consideration.

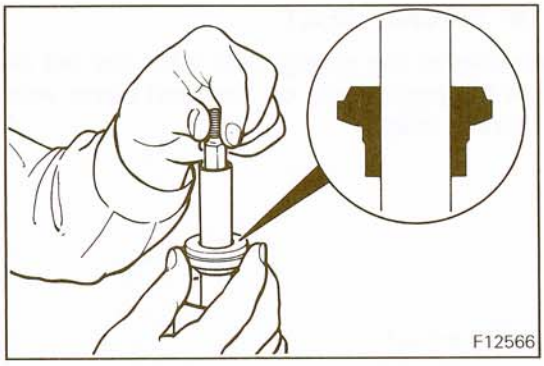

12. INSTALLATION OF PISTON GUIDE

With the flange of the piston guide facing upward, insert the piston guide to the piston rod until it contacts the cylinder end.

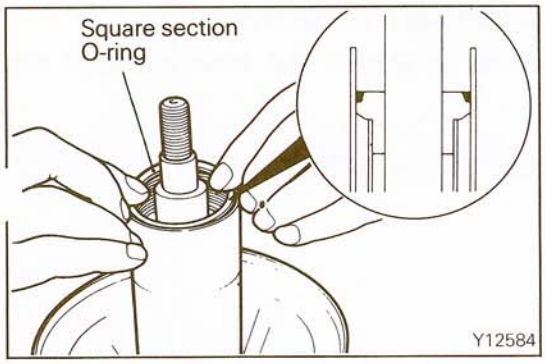

10. INSTALLATION OF SQUARE SECTION O-RING

Install the new square section O-ring to the piston guide.

NOTE
When the O-ring is set on the periphery of the piston guide, press the O-ring down evenly, taking care to prevent inclination and doubling.

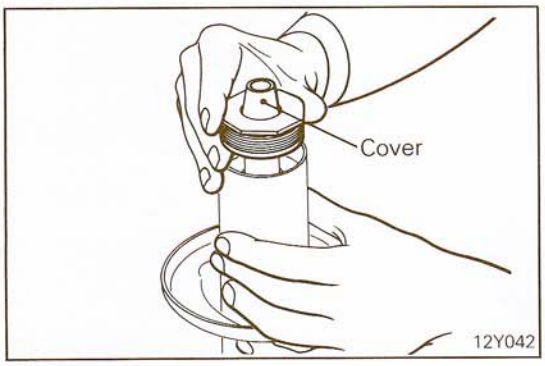

9. INSTALLATION OF OIL SEAL ASSEMBLY

(1) Attach the cover to the piston rod end.
(2) Apply shock absorber fluid to the cover and install the oil seal assembly.

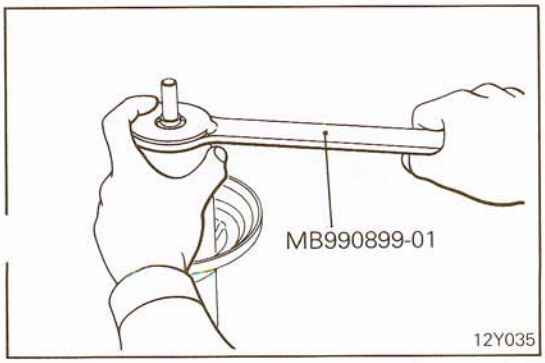

(3) Tighten the oil seal assembly, by using the special tool, until its edge contacts the strut outer cylinder.

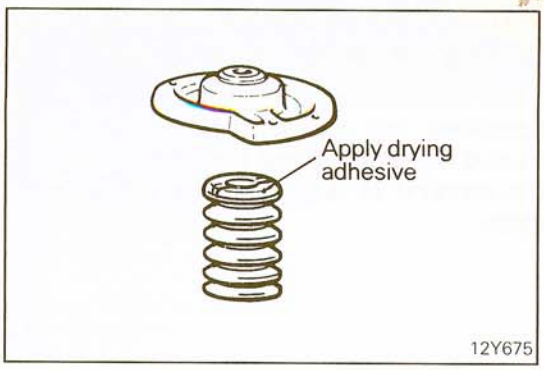

5. APPLICATION OF ADHESIVE TO RUBBER HELPER

Bond the spring seat to the rubber helper with a drying adhesive.

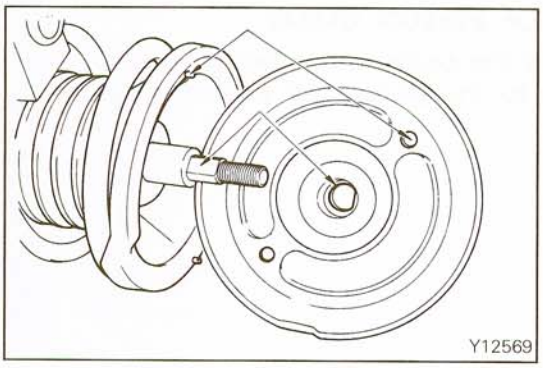

4. INSTALLATION OF SPRING SEAT

Align the D-shaped hole in the spring seat with the flat on the piston rod. Align the projections on the dust cover with the holes in the spring seat.

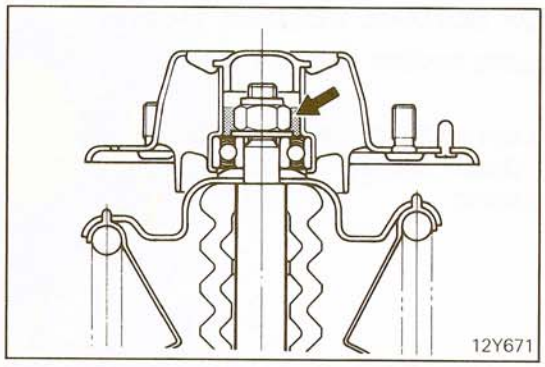

3. APPLICATION OF GREASE TO INSULATOR

Pack the multipurpose grease in the strut insulator and install the cap.

NOTE
Do not apply grease to the rubber parts.

LOWER ARM AND KNUCKLE ARM

N02NA- -

REMOVAL AND INSTALLATION

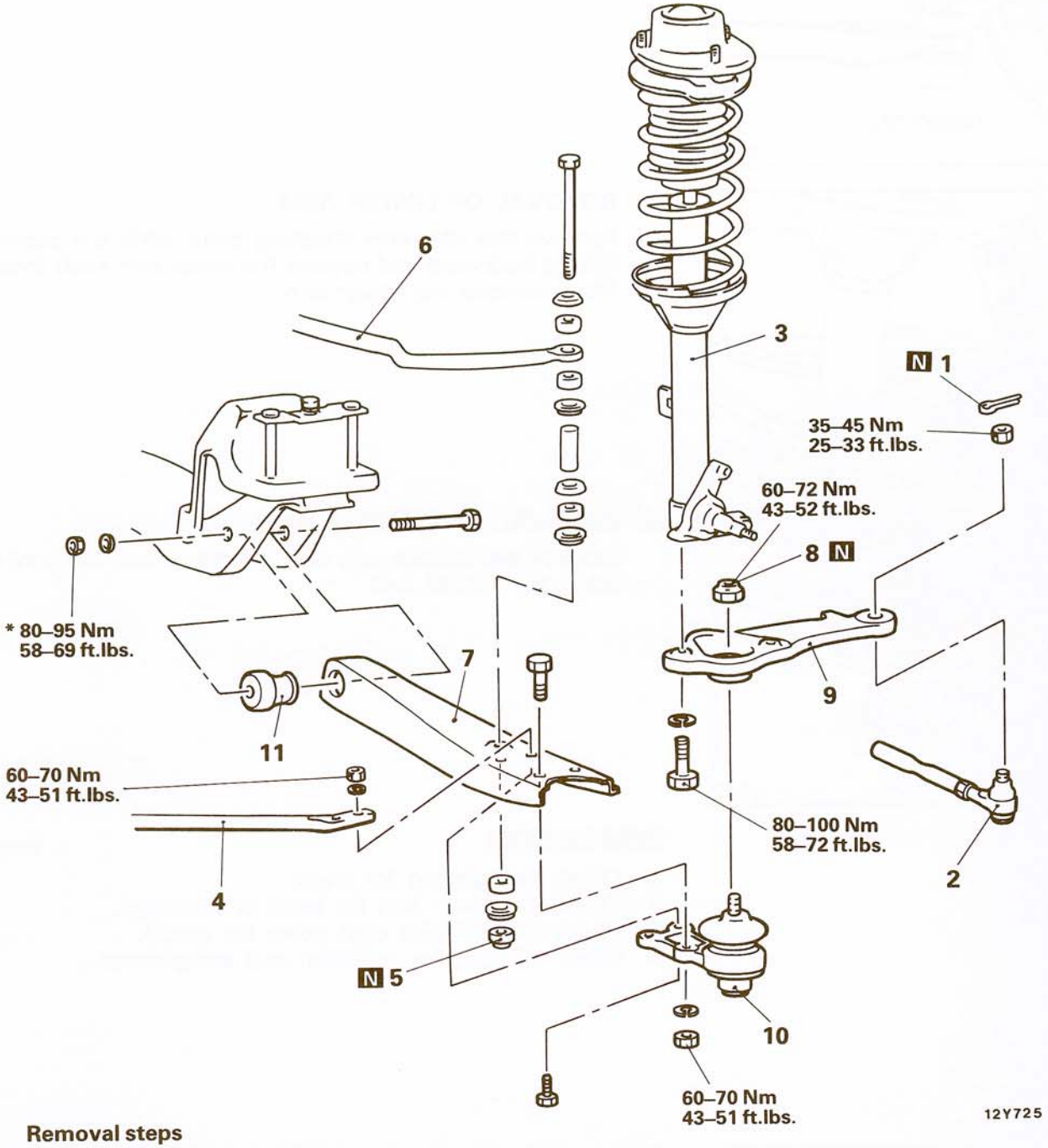

Removal steps

1. Cotter pin
2. Tie rod end assembly connection
3. Strut assembly connection
4. Strut bar connection
5. Stabilizer bar mounting nut (Self locking nut)
6. Stabilizer bar connection
7. Lower arm
8. Self locking nut
9. Knuckle arm
10. Ball joint
11. Lower arm shaft bushing

NOTE
(1) Reverse the removal procedures to reinstall.
(2) ⇔: Refer to "Service Points of Removal".
(3) ⇔: Refer to "Service Points of Installation".
(4) N: Non-reusable parts
(5) *: Must be tightened while vehicle is unladen.

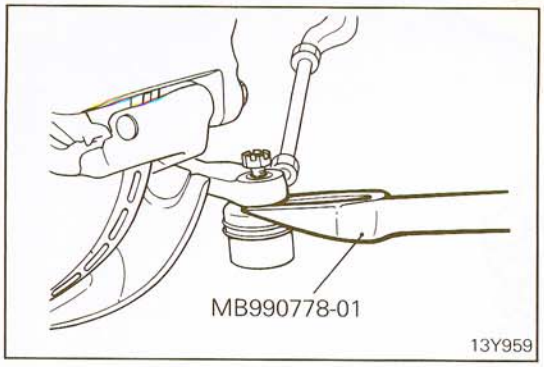

SERVICE POINTS OF REMOVAL

N02NBAE

2. DISCONNECTION OF ROD END ASSEMBLY

Disconnect the tie rod end assembly from the knuckle arm using the special tool.

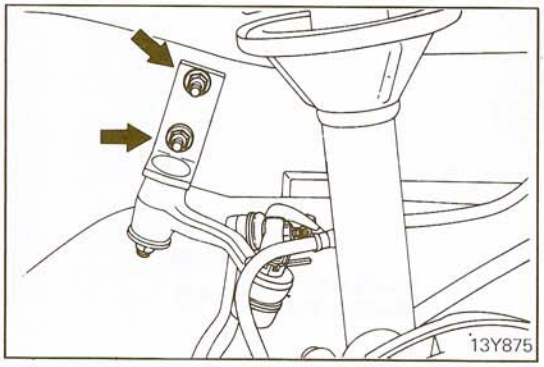

7. REMOVAL OF LOWER ARM

Remove the idler arm attaching bolts, slide the steering linkage backward and remove the lower arm shaft (bolts). Then, remove the lower arm.

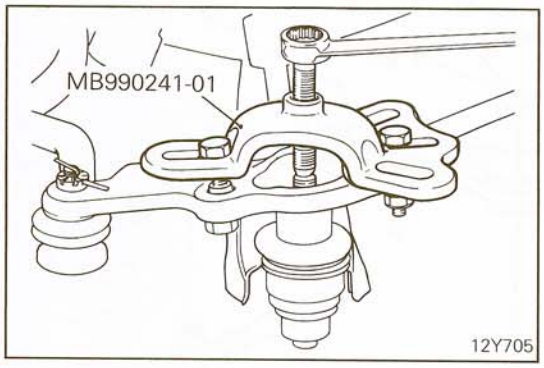

9. REMOVAL OF KNUCKLE ARM

Remove the knuckle arm from the lower arm ball joint by using the special tool.

INSPECTION

N02NCAC

- Check the bushing for wear.
- Check the lower arm for bend or breakage.
- Check the ball joint dust cover for cracks.
- Check all bolts for condition and straightness.

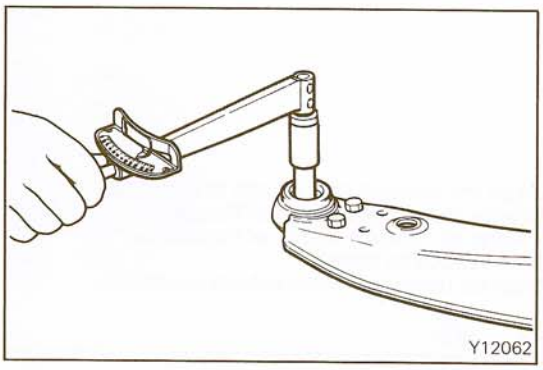

CHECKING OF BALL JOINT STARTING TORQUE

Measure the starting torque of the ball joint.

Standard value: 500 – 800 Ncm (43 – 69 in.lbs.)

NOTE

If ball joint starting torque exceeds the upper limit of standard value, replace the ball joint.

Even if ball joint starting torque is below the lower limit c standard value, the ball joint may be reused unless it has excessive play or a drag is felt.

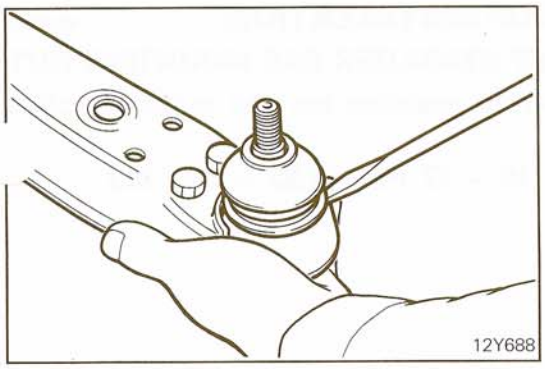

REPLACEMENT OF BALL JOINT DUST COVER

N02NEAD

(1) Remove the dust cover.

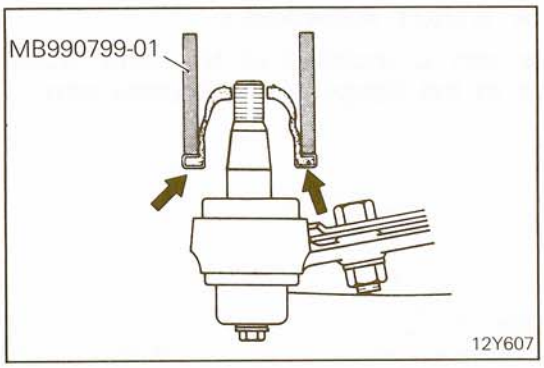

(2) Apply semi-drying sealant to the metal ring part of the new dust cover.
(3) Drive in the dust cover with the special tool until it is fully seated.

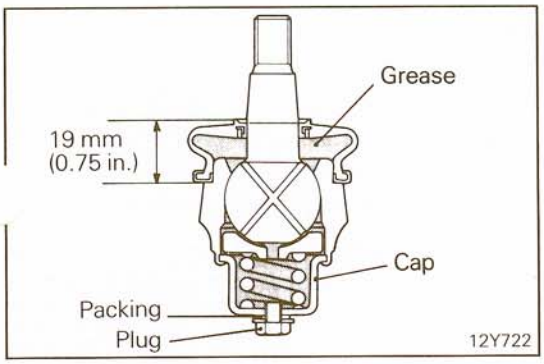

(4) Exchange the ball joint plug with a grease nipple.
(5) Shape the dust cover to dimensions shown and pack with specified grease until it takes the form as indicated by broken line.

Specified grease: Multipurpose grease SAE J310, NLGI No. 2

(6) Apply semi-drying sealant to plug and reinstall plug.

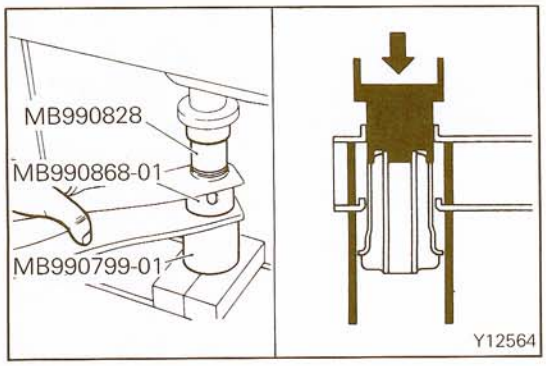

REPLACEMENT OF LOWER ARM BUSHING

N02NDAB

Caution
Do not remove the lower arm bushing unless absolutely necessary.

(1) Press out the lower arm bushing with the special tool.

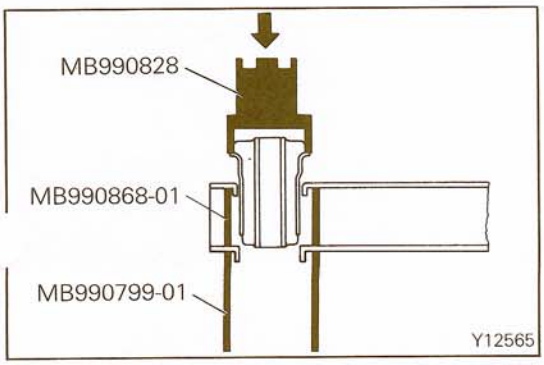

(2) Press-fit the new lower arm bushing with the special tool until it is fully seated in the lower arm.

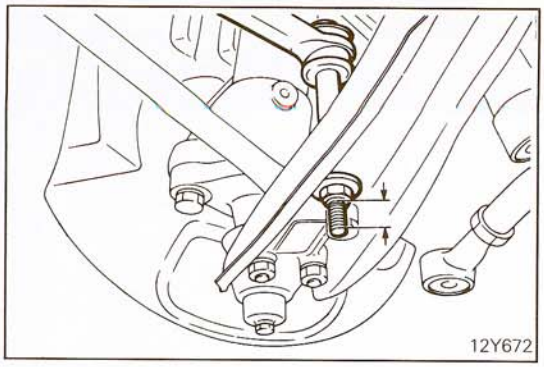

SERVICE POINTS OF INSTALLATION N02NFAF

5. INSTALLATION OF STABILIZER BAR MOUNTING NUT

Tighten the nut on the stabilizer bar bolt to the specified distance.

Standard value: 15 – 17 mm (0.59 – 0.67 in.)

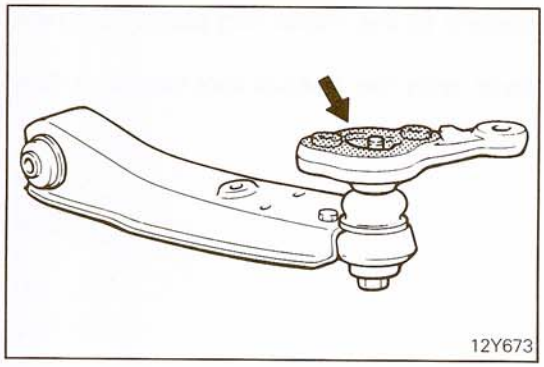

3. INSTALLATION OF STRUT ASSEMBLY

When the knuckle arm is installed to the strut, apply semi-drying sealant to the flange of the knuckle arm.

STABILIZER BAR AND STRUT BAR

N02TA- -

REMOVAL AND INSTALLATION

Pre-removal Operation
- Removal of Under Cover

Post-installation Operation
- Installation of Under Cover
- Inspection and Adjustment of Wheel Alignment (Refer to P.2-6.)

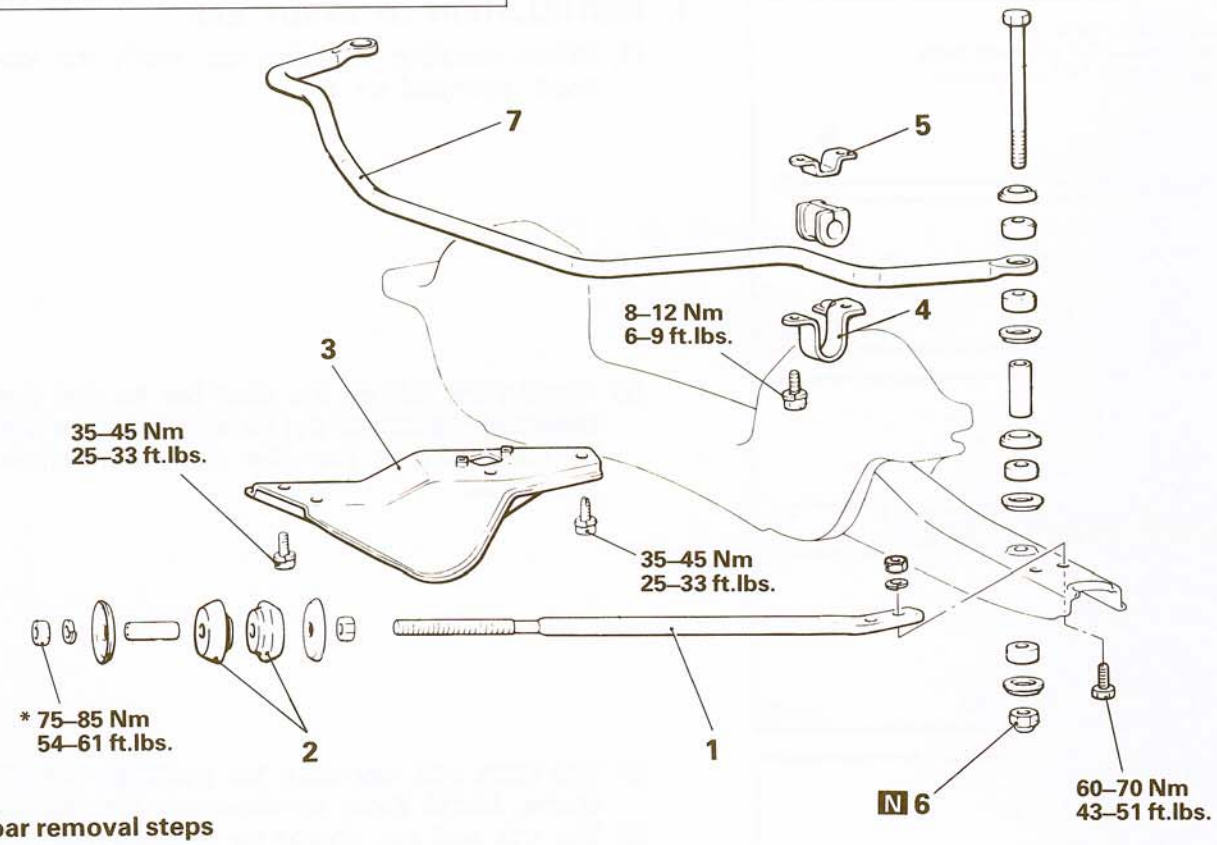

Strut bar removal steps

◆◆ 1. Strut bar
2. Bushing
3. Strut bar bracket

Stabilizer bar removal steps

4. Lower fixture
5. Upper fixture
◆◆ 6. Stabilizer bar mounting nut (Self locking nut)
7. Stabilizer bar

NOTE
(1) Reverse the removal procedures to reinstall.
(2) ◆◆: Refer to "Service Points of Installation".
(3) N: Non-reusable parts
(4) *: Must be tightened while vehicle is unladen.

12Y668

INSPECTION

N02TCAB

- Check the stabilizer bar for deformation or weakness.
- Check the rubber bushing for cracks and damage.
- Check the strut bar for cracks or bend.
- Check the strut bar bracket for deformation or damage.
- Check the bushing for cracks or damage.

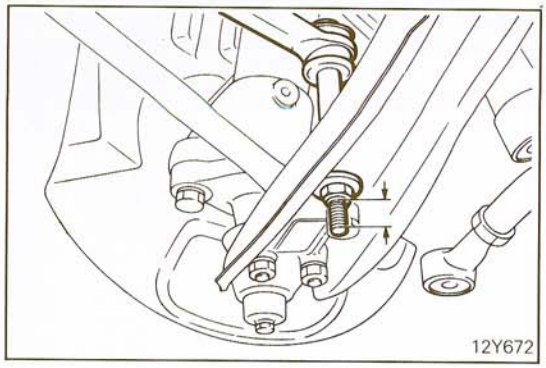

SERVICE POINTS OF INSTALLATION N02TDAD

6. INSTALLATION OF STABILIZER BAR MOUNTING NUT

Tighten the nut on the stabilizer bar bolt to the specified distance.

Standard value: 15 – 17 mm (0.59 – 0.67 in.)

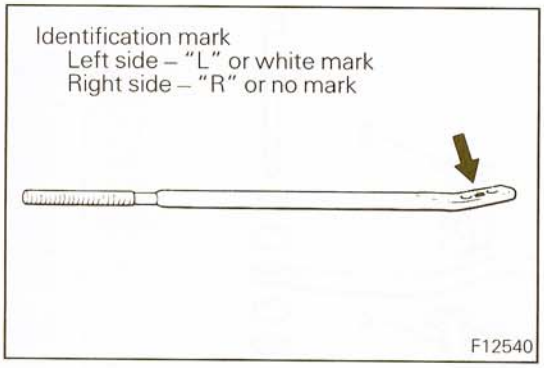

1. INSTALLATION OF STRUT BAR

(1) When installing the strut bar, verify the identification mark stamped on it.

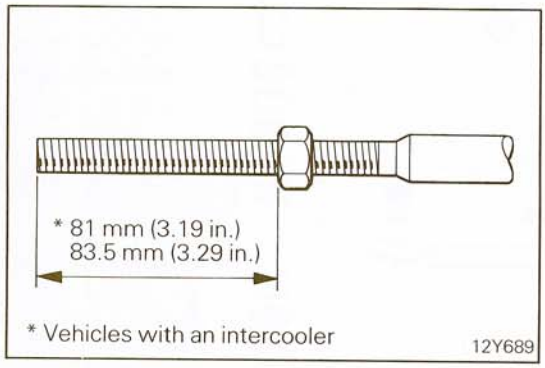

(2) Tighten the nut on the strut bar so that the distance between the end of the strut bar and the front surface of the lock nut has the dimension shown in the illustration.

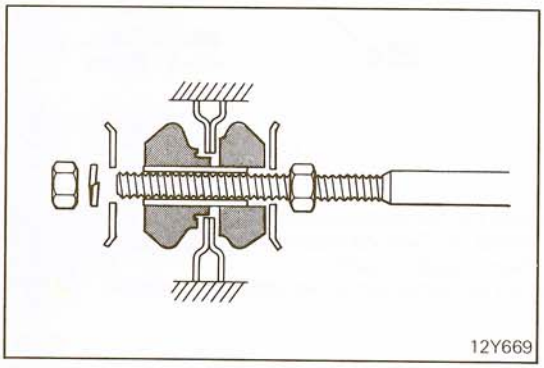

(3) The front and rear strut bar bushings are different in shape. Install them as shown in the illustration.
(4) The top end nut should be torqued with the vehicle lowered to the ground and unloaded. After installing the strut bars, measure the caster.

FRONT CROSSMEMBER

N02YA--

REMOVAL AND INSTALLATION

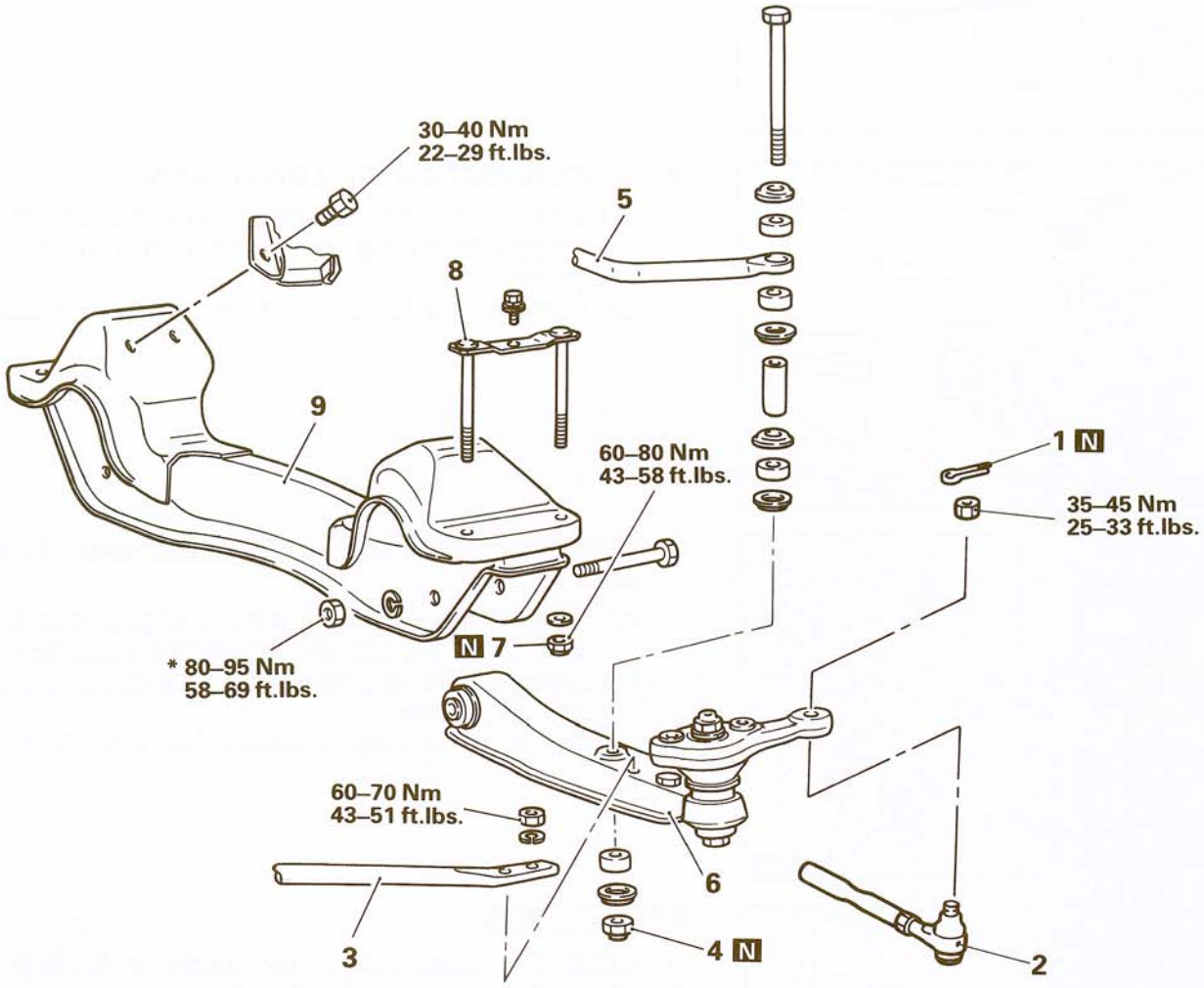

12Y726

Removal steps

1. Cotter pin
2. Tie rod end assembly connection
3. Strut bar connection
4. Stabilizer bar mounting nut (Self locking nut)
5. Stabilizer bar connection
6. Lower arm connection
7. Front crossmember mounting nuts (Self locking nut)
8. Bolt assembly
9. Front crossmember

NOTE
(1) Reverse the removal procedures to reinstall.
(2) ◆◆: Refer to "Service Points of Removal".
(3) ◆◆: Refer to "Service Points of Installation".
(4) N: Non-reusable parts
(5) *: Must be tightened while vehicle is unladen.

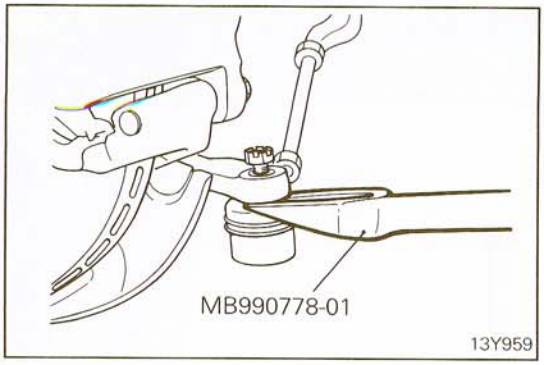

SERVICE POINTS OF INSTALLATION N02YBAB

2. DISCONNECTION OF TIE ROD END ASSEMBLY

Disconnect the tie rod end assembly from the knuckle arm using the special tool.

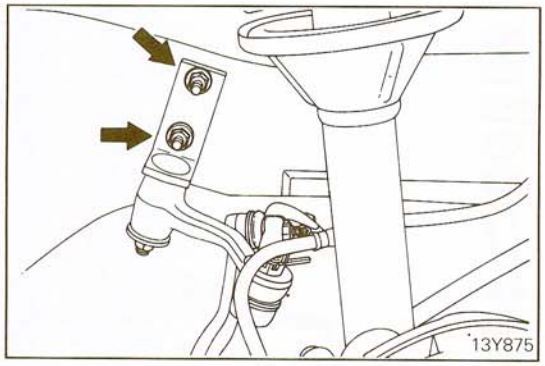

6. DISCONNECTION OF LOWER ARM

(1) Remove the idler arm attaching bolts, slide the steering linkage backward and remove the lower arm shaft (bolts).
(2) Remove the lower arm from the front crossmember.

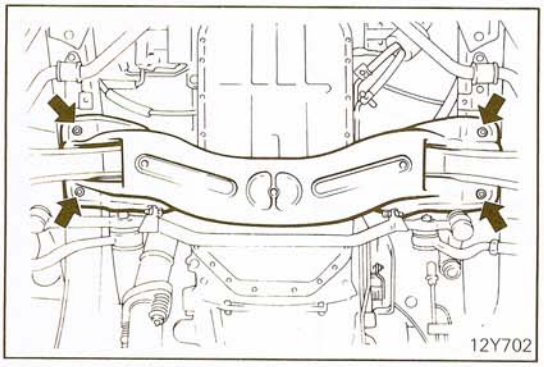

7. REMOVAL OF FRONT CROSSMEMBER MOUNTING NUT

(1) Support the engine to such a degree that the engine load does not act on the engine mounting.
(2) Remove the engine mounting-to-front crossmember attaching bolts.
(3) Remove the front crossmember mounting nuts.

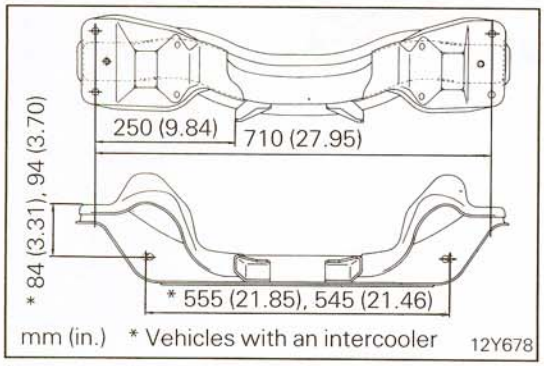

INSPECTION N02YCAB

- Check the crossmember for cracks or damage.
- Check the crossmember for dimension.

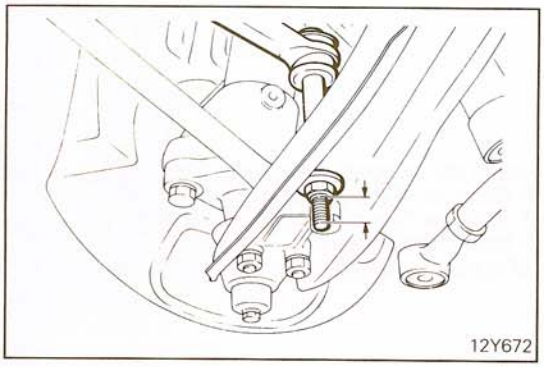

SERVICE POINT OF INSTALLATION N02YEAB

4. INSTALLATION OF STABILIZER BAR MOUNTING NUT

Tighten the nut on the stabilizer bar bolt to the specified distance.

Standard value: 15 – 17 mm (0.59 – 0.67 in.)

REAR AXLE

CONTENTS

AXLE SHAFT **19**

DIFFERENTIAL CARRIER **34**

DRIVE SHAFT **24**

GENERAL INFORMATION **2**

SERVICE ADJUSTMENT PROCEDURES **16**

- Checking Axle Shaft for Axial Play 16
- Checking Gear Oil Level 16
- Checking Rear Axle Total Backlash 16
- Limited Slip Differential Preload Measurement 17
- Replacement of Differential Carrier Oil Seal 17

SPECIAL TOOLS **11**

SPECIFICATIONS **8**

- General Specifications 8
- Lubricants 10
- Sealants and Adhesives 10
- Service Specifications 9
- Torque Specifications 9

TORQUE TUBE **29**

TROUBLESHOOTING **13**

- Axle Shaft Axle Housing
  - Grease Leakage
  - Noise While Wheels are Rotating
- Differential (Conventional Differential)
  - Bearing Noise While Driving or Coasting
  - Constant Noise
  - Gear Noise While Coasting
  - Gear Noise While Driving
  - Heat
  - Noise While Turning
  - Oil Leakage
- Differential (Limited Slip Differential)
  - Abnormal Noise During Driving or Gear Changing
  - Abnormal Noise When Cornering
  - Breakdown
  - Gear Noise
  - Gear Oil Leakage
  - Seizure
  - The Limited Slip Differential Does Not Function (On Snow, Mud, Ice, etc.)
- Drive Shaft
  - Noise
- Torque Tube
  - Noise

GENERAL INFORMATION

N03BAAC

The rear axle consists of torque tube, differential, drive shaft, axle housing and axle shaft. There are two types of differential: conventional differential and limited slip differential.

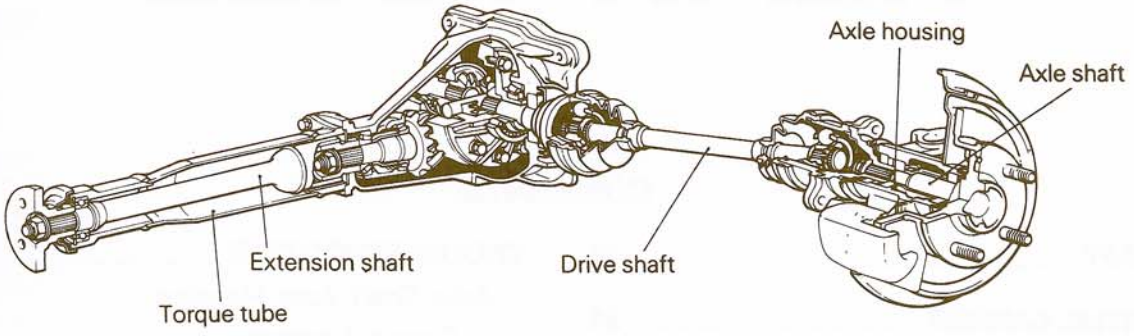

12Y201

LIMITED SLIP DIFFERENTIAL

N03BBAB

A limited slip differential is an anti-slipping device which functions as a differential during cornering to allow the outer wheel to turn at a faster speed than the inner wheel. In the event that one wheel begins spinning (driving on slippery road surfaces, one wheel leaves the road surface. etc.), it automatically functions to event such spinning.

CONSTRUCTION AND FUNCTION

With a conventional differential, in the event that one wheel of the vehicle is on ice, mud, or some other slippery surface, the wheel will spin and the drive force of the vehicle will be greatly reduced. If this happens, the speeds of the differential case and of the side gear (axle shaft) are different because of differential operation. The limited slip function acts to limit this differential operation. The construction is shown in the illustration. The multi-plate clutches engage with the differential case and with each of the side gears. If spinning causes a difference in component speeds, the frictional force between the clutch plates will cause the speed of the side gear to become closer to that of the differential case, and thus the limited slip function will control the spinning. In addition, the purpose of the pressure rings inside the differential case is to the driving force to the pinion gear, and the reason for the separation is to provide an increase in the clutch plate pressing force through the leverage of the pinion shaft.

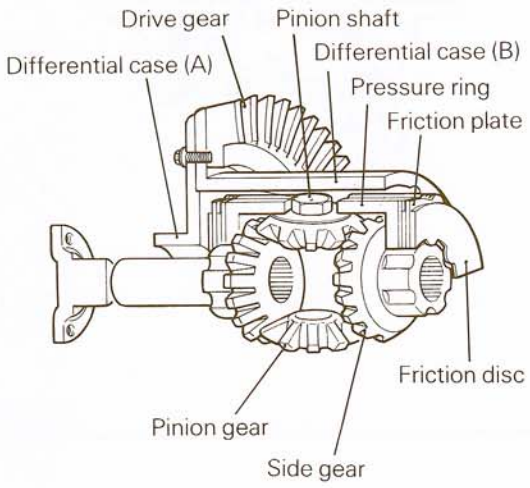

11S675

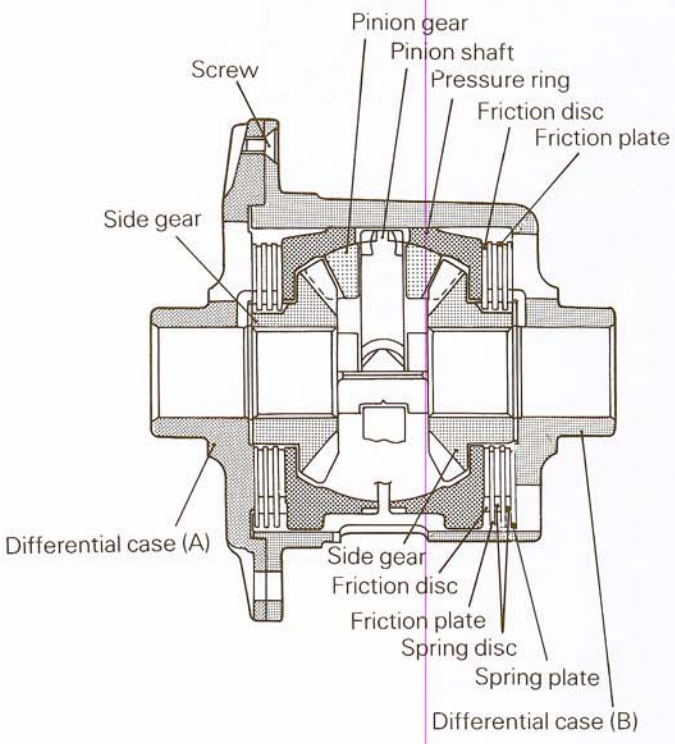

11S653

OPERATION (TORQUE TRANSMISSION) DURING STRAIGHT DRIVING

When the differential case is turned the drive pinion via the drive gear, the pressure rings which are interlocked with the differential case will also turn at the same speed. [The projections located on the outside of the pressure rings engage (with some play) the grooves located on the inside of the differential case] When the pressure rings move in the direction or rotation, they contact the tapered portion of the pinion sha and thereby receive reaction force in both the lateral direction and the direction of rotation. The reaction force in the lateral direction presses the clutch plates together, and maintains straight driving. During such driving, because the road surface gives equal resistance to both the left and right wheels, equal resistance is applied to the left and right side gears. Therefore, the pinion gear does not revolve, and the drive gear, the differential case, the pinion shaft, the pinion gear, and the left and right side gears all turn as one unit.

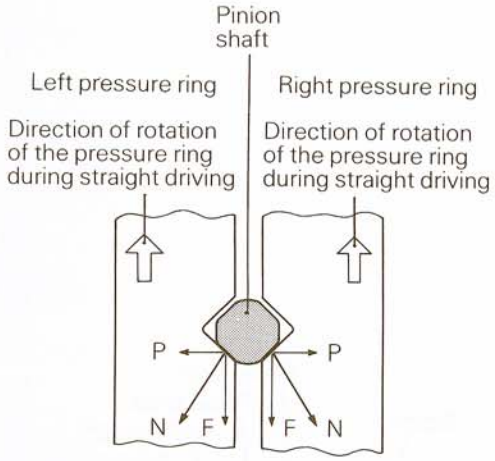

Reaction force symbol doce
P= Pressing force of the pressure rings on the clutch plates
F= Pressing force of the pressure rings on the pinion shaft
N= Resultant, force of P + F

11F108

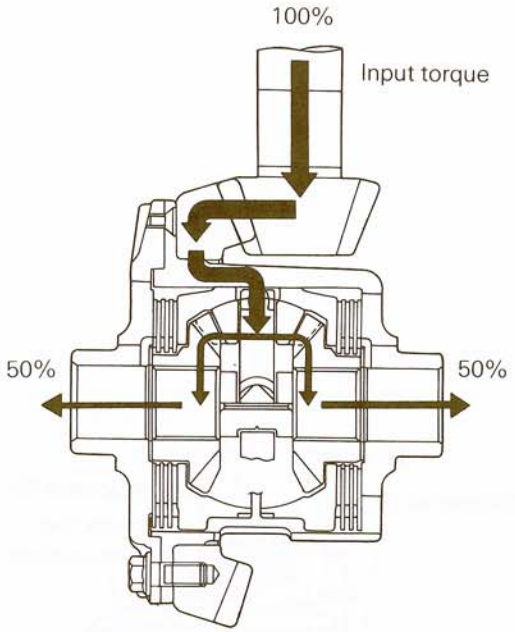

11S652

OPERATION (TORQUE TRANSMISSION) WHEN THE SPEEDS OF THE LEFT AND RIGHT WHEELS ARE DIFFERENT

When one wheel is in contact with a concrete road surface (which has high coefficient of friction) and the other wheel is in contact with a muddy or other slippery road surface (which has low coefficient of friction), a differential operation will cause the speed of the wheel in contact with the slippery surface to be faster than the speed of the drive gear, lowering the maximum drive force. If this occurs, the limited slip function will control the differential operation and increase the driving force.

The transmission of torque through the limited slip device in this event is as follows:

When the differential case is turned by the drive gear and the drive pinion, the pressure rings which are interlocked with the differential case will turn at the same speed. Also, the difference in the road surface resistances will cause differential operation and the left and right side gears will revolve at speeds different from that of the differential case. Because of the friction produced between the clutch plates in mesh with both the side gear and differential case, one of the pressure rings increases its rotating speed, whereas the other reduces its rotating speed. The pressure rings press the tapered portion of the pinion shaft with which they are in contact, and thereby receive reaction force in both the lateral direction and the direction of rotation. The reaction force in the lateral direction causes the clutch plates to mesh, increasing the frictional and the drive force.

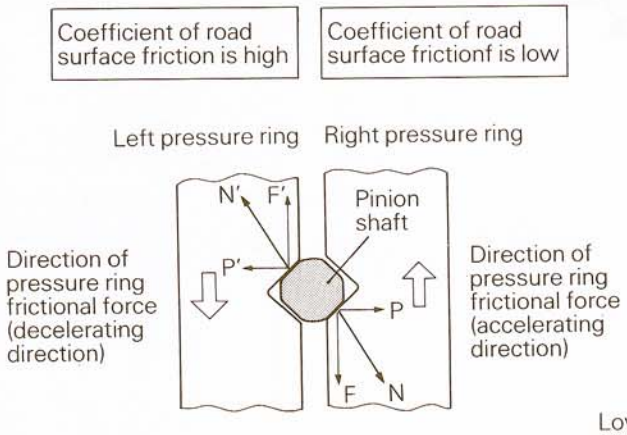

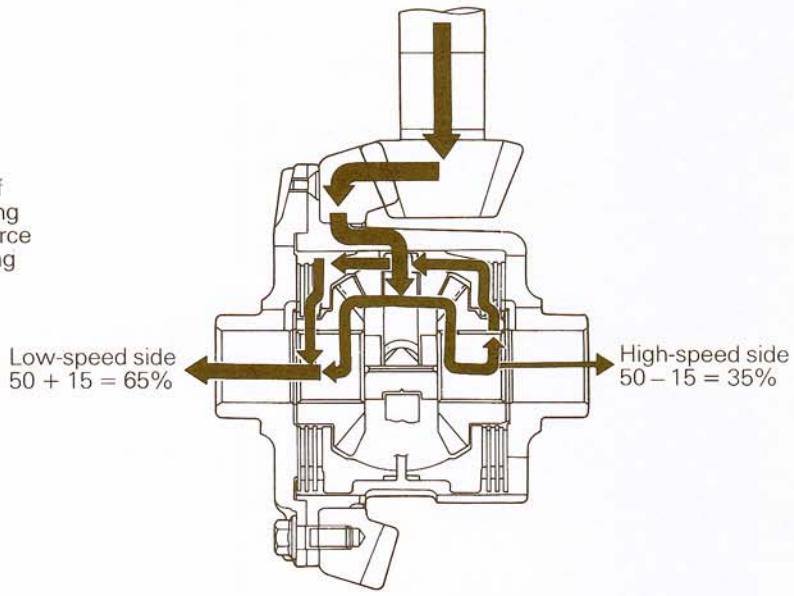

Opposing force symbol code

P, P' = Pressing force of the pressure rings on the clutch plates

F, F' = Pressing force of the pressure rings on the pinion shaft

N, N' = Resultant force of P + F and P' + F'

11F109 11W511

FEATURES OF THE LIMITED SLIP DIFFERENTIAL

(1) When one wheel of the vehicle is in contact with a road surface which has poor traction, the limited slip differential, in comparison to a conventional differential, supplies additional torque to the wheel which has the better traction conditions by utilizing clutch plates, thus improving the traction capacity. Moreover, the effect of the limited slip differential is to prevent the vehicle from becoming stuck, even if the traction of one of the wheels becomes radically reduced.

(2) When one wheel moves from a road surface which has poor traction onto one which has good traction, or when the wheels are constantly leaving the road surface while driving on a rough, bumpy road, the clutch plates of the limited slip differential allow the torque to absorb the differences between the revolution speeds of the right and left wheels. In addition, the sudden changes (jolting) in the drive force are also absorbed, thus preventing skidding.

(3) Because in the limited slip differential, the differential operation is slightly restricted during normal cornering, the understeer tendency (the tendency for the cornering of the vehicle to exceed the turning of the steering wheel) becomes greater, however, this does not have any detrimental effect on the driving of the vehicle. Moreover, in the event that the inside wheel lifts up (the tire leaves the road surface) during high speed cornering, the clutch plates function to limit differential operation which would simultaneously decrease the drive force of the outside wheel; therefore, the limited slip differential moderates sudden speed reductions during vehicle cornering, and thereby provides greater cornering capability than a conventional differential.

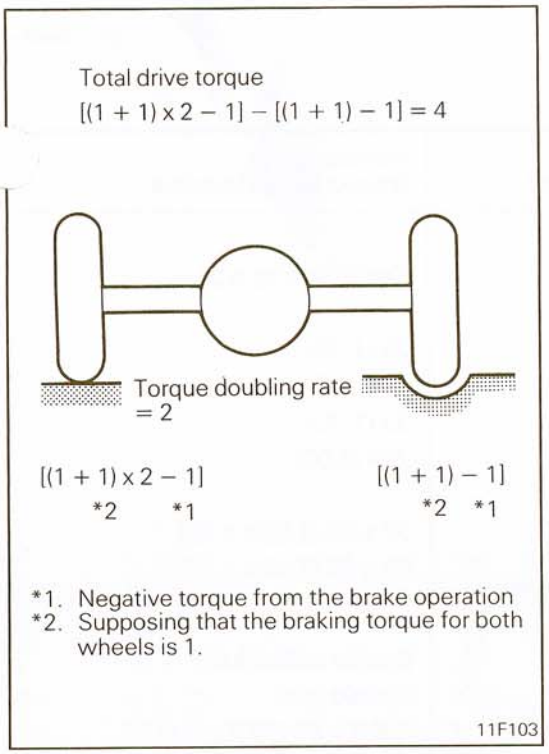

MAKING EFFECTIVE USE OF A LIMITED SLIP DIFFERENTIAL

Effective Use in Combination with the Brakes

If a wheel is in contact with a slippery road surface and has begun to spin, using the brakes in combination with the limited slip differential will provide even greater traction capability. The resistance caused by the brakes will further increase the drive torque of the engine, and this increased torque will increase the clutch plate pressing force of the pressure ring, thus increasing the traction. also, the drive force transmitted to the brakes will not function as real drive force. This is shown in the illustration at right. The application rate is Rt = 2, and, supposing the torque from the brake operation is 1, a drive torque of 1 + 1 = 2 will be applied to the spinning wheel (the right wheel), and a drive torque of twice that which is applied to the spinning wheel, or (1 + 1) x 2 = 4, will be applied to the wheel which is not spinning (the left wheel). However, because the brake force of 1 is a negative value with regard to the propulsion torque of each wheel, the propulsion torque actually obtained by the right wheel is (1 + 1) – 1 = 1, and that obtained by the left wheel is [(1 + 1) x 2 – 1] = 3.

Therefore, the total drive torque is 1 + 3 = 4. In the same circumstances, the total drive torque of a conventional differential is 1 + 1 = 2, and that of a limited slip differential when the brakes are not used in combination is 1 + 2 = 3. This represents an increase in the traction by a factor of 2 over that of a conventional differential, and by a factor of 1.3 over that of a limited slip differential when the brakes are not used.

NOTES REGARDING SERVICE PROCEDURES FOR THE LIMITED SLIP DIFFERENTIAL

(1) The engine must never be operated while only a single wheel is jacked up. Doing so is extremely dangerous; if the differential functions while the engine is operated at high speed, the oil film between the clutch plates will decrease, thus causing the friction coefficient to increase, the prescribed torque ratio will be exceeded, an excessive amount of torque will be applied to the stationary wheel, and the vehicle will move forward. Also, resistance must never be applied to the spinning wheel.

(2) In the event that one of the wheels comes in contact with a slippery road surface and begins to spin, if the engine continues to be operated at high speed for too long, the clutch plates might become abnormally worn; such action must be avoided.

(3) As gear oil, use MITSUBISHI Genuine Gear Oil (part number 8149630EX) or equivalent. MITSUBISHI Genuine Gear Oil was especially developed for limited-slip differential use, and is different from ordinary gear oil. When changing the oil, the oil which is removed will appear considerably blacker than ordinary oil. This, however, is not a change in color due to the deterioration of the oil, but rather the oil has become mixed with worn particles of the special treatment on the clutch plates.

SPECIFICATIONS

N03CA- -

GENERAL SPECIFICATIONS

Items	Vehicles with conventional differential	Vehicles with limited slip differential
Axle shaft		
Type	Semi-floating type	Semi-floating type
Shaft dimension		
Outer bearing portion dia. mm (in.)	35 (1.38)	35 (1.38)
Inner bearing portion dia. mm (in.)	30 (1.18)	30 (1.18)
Center portion dia. mm (in.)	33 (1.30)	33 (1.30)
Overall length mm (in.)	204 (8.03)	204 (8.03)
Bearing		
O.D. x I.D. Outer mm (in.)	72 x 35 (2.83 x 1.38)	72 x 35 (2.83 x 1.38)
Inner mm (in.)	62 x 30 (2.44 x 1.18)	62 x 30 (2.44 x 1.18)
Drive shaft		
Joint type Inner	Double offset joint	Double offset joint
Outer	Birfield joint	Birfield joint
Length x diameter mm (in.)	341.6 x 26 (13.4 x 1.0)	328.1 x 27 (12.9 x 1.1)
Differential		
Reduction gear type	Hypoid gear	Hypoid gear
Reduction ratio	3.545	3.545
Differential lock type	–	Disc type
Differential gear type and configuration		
Side gear	Straight bevel gear x 2	Straight bevel gear x 2
Pinion gear	Straight bevel gear x 2	Straight bevel gear x 4
Number of teeth		
Drive gear	39	39
Drive pinion	11	11
Side gear	14	16
Pinion gear	10	10

SERVICE SPECIFICATIONS

N03CB- -

Items	Vehicles with conventional differential	Vehicles with limited slip differential
Standard value		
Limited slip differential axle shaft turning torque Nm (ft.lbs.)	–	39 (28) or more
Setting of D.O.J. boot length mm (in.)	80 ± 3 (3.1 ± 0.12)	80 ± 3 (3.1 ± 0.12)
Final drive gear backlash mm (in.)	0.11 – 0.16 (0.004 – 0.006)	0.13 – 0.18 (0.005 – 0.007)
Differential gear backlash mm (in.)	0 – 0.076 (0 – 0.003)	–
Drive pinion rotating torque		
with oil seal Ncm (in.lbs.)	35 – 45 (3.0 – 3.9)	–
without oil seal Ncm (in.lbs.)	15 – 25 (1.3 – 2.2)	15 – 25 (1.3 – 2.2)
Difference in total thickness between left and right clutch plate mm (in.)	–	0.05 (0.002)
Clearance between the clutch plates and the differential case mm (in.)	–	0.06 – 0.20 (0.002 – 0.008)
Clutch plate preload		
when equipped with new clutch plates Nm (ft.lbs.)	–	50 – 80 (36 – 58)
when equipped with old clutch plates Nm (ft.lbs.)	–	35 – 80 (25 – 58)
Limit		
Rear axle total backlash mm (in.)	5 (0.2)	5 (0.2)
Drive gear runout mm (in.)	0.05 (0.002)	0.05 (0.002)
Differential gear backlash mm (in.)	0.20 (0.008)	–
Axle shaft end play mm (in.)	0.8 (0.031)	0.8 (0.031)
Torque tube companion flange runout mm (in.)	0.1 (0.004)	0.1 (0.004)
Spline coupling runout mm (in.)	0.1 (0.004)	01 (0.004)
Clutch plate wear		
Difference in the thicknesses of the friction surface and the projection mm (in.)	–	0.1 (0.004)
Flatness of the friction plates and friction discs mm (in.)	–	0.08 (0.003)

TORQUE SPECIFICATIONS

N03CC- -

Items	Nm	ft.lbs.
Axle shaft companion flange	260 – 300	188 – 217
Drive shaft to axle shaft companion flange	55 – 65	40 – 70
Rear axle housing to caliper support	40 – 50	29 – 36
Torque tube companion flange	160 – 220	116 – 159
Propeller shaft to torque tube	50 – 60	36 – 43
Torque tube to front support	35 – 45	25 – 33
Torque tube to differential carrier	70 – 85	51 – 61

Items	Nm	ft.lbs.
Differential carrier to spline coupling		
Vehicles without an intercooler	160 – 220	116 – 159
Vehicles with an intercooler	190 – 250	137 – 181
Filler plug	40 – 60	29 – 43
Drain plug	60 – 70	43 – 51
Bearing cap	55 – 65	40 – 47
Differential case to drive gear	80 – 90	58 – 65
Cover	15 – 22	11 – 16

LUBRICANTS

N03CD- -

Items	Specified lubricants	Quantity
Rear axle gear oil		
Conventional differential	Hypoid gear oil API classification GL-5 SAE viscosity No. 90	1.30 lit. (1.37 U.S.qts., 1.14 Imp.qts.)
Limited slip differential	MITSUBISHI Genuine Gear Oil Part No. 8149630EX or equivalent	1.30 lit. (1.37 U.S.qts., 1.14 Imp.qts.)
Axle housing grease	Multipurpose grease SAE J310, NLGI No. 2	85 g (3.0 oz.)
Axle shaft oil seal lip	Multipurpose grease SAE J310, NLGI No. 2	As required
Differential case oil seal lip	Multipurpose grease SAE J310, NLGI No. 2	As required
Differential side spline and pocket of extension shaft	Multipurpose grease SAE J310, NLGI No. 2	As required
Contact surfaces of spline coupling and washer	Multipurpose grease SAE J310, NLGI No. 2	As required
Washer of special tools for pinion height adjustment	Multipurpose grease SAE J310, NLGI No. 2	As required
D.O.J. boot grease	Repair kit grease	
Vehicles without an intercooler		95 – 115 gr (3.4 – 4.1 oz.)
Vehicles with an intercooler		110 – 130 gr (3.9 – 4.6 oz.)
B.J. boot grease	Repair kit grease	
Vehicles without an intercooler		80 – 100 gr (2.8 – 3.5 oz.)
Vehicles with an intercooler		95 – 115 gr (3.4 – 4.1 oz.)

NOTE
D.O.J.: Double offset joint
B.J.: Birfield joint

SEALANTS AND ADHESIVES

N03CE- -

Items	Specified sealants and adhesives	Quantity
Differential carrier gasket	3M ART Part No. 8663, 8661 or equivalent	As required
Differential carrier vent plug	3M ART Part No. 8663 or equivalent	As required
Drive gear threaded hole	3M Adhesive STUD LOCKING 4170 or equivalent	As required

STB Revision

SPECIAL TOOLS

N03DA--

Tool (Number and name)	Use	Tool (Number and name)	Use
MB990918 Bearing puller set 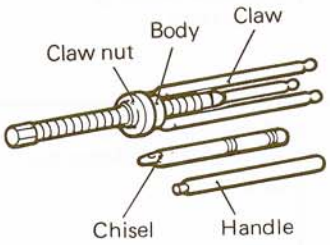	Removal of the axle shaft outer bearing	MB990925-01 Bearing and oil seal installer disc set  MB990938-01 Handle 	Driving-out and press-fitting of the axle shaft inner bearing Driving-out and press-fitting of the drive pinion bearing outer race
MB990727-01 Drive pinion oil seal installer  MB990031-01 Drive pinion oil seal installer  MIT304180 Handle 	Insertion of the axle shaft oil seal Press-fitting of the oil seal of the drive pinion Press-fitting of the oil seal onto the side of the differential carrier	MB990339-01 Pinion carrier bearing puller  MB990811-01 Side bearing cup remover step plate  MIT44801 Collet set  MIT303173 Insert 	Removal of the side bearing inner race Removal of the drive pinion rear bearing inner race
MB990211-01 Slide hammer with adapter 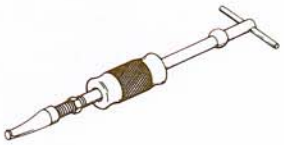	Removal and insertion of the drive shaft assembly Removal or the torque tube assembly Removal of the extension shaft bearing	MB990941-01 Torque tube bearing installer  MIT208977 Handle 	Press-fitting of the extension shaft bearing

Tool (Number and name)	Use	Tool (Number and name)	Use
MB990907-01 Coupling holder 	Removal and installation of the spline coupling	MB990802-01 Bearing installer 	Press-fitting of the drive pinion rear bearing inner race Press-fitting of the side bearing inner race
MB990901-01 Pinion height gauge set 	Measurement of the drive pinion height	MB990241-01 Axle puller  MB990211-01 Slide hammer with adapter 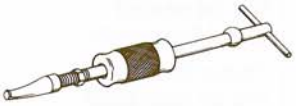	Measurement of the limited slip differential preload
MB990988 Side gear holding tool set 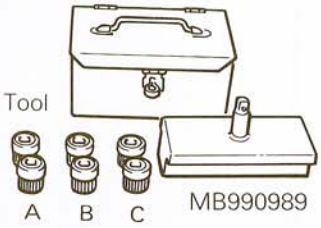	Measurement of the clutch plate preload		

TROUBLESHOOTING

N03EAAB

Symptom	Probable cause	Remedy
AXLE SHAFT, AXLE HOUSING Noise while wheels are rotating	Brake drag Bent axle shaft Worn or scarred axle shaft bearing	Replace
Grease leakage	Worn or damaged oil seal Malfunction of bearing seal	Replace
DRIVE SHAFT Noise	Wear, play or seizure of ball joint Excessive drive shaft spline looseness	Replace
TORQUE TUBE Noise	Wear, play or seizure of bearing	Replace
DIFFERENTIAL (CONVENTIONAL DIFFERENTIAL) Constant noise	Improper final drive gear tooth contact adjustment Loose, worn or damaged side bearing Loose, worn or damaged drive pinion bearing	Correct or replace
	Worn drive gear, drive pinion Worn side gear thrust washer or pinion shaft Deformed drive gear or differential case Damaged gear	Replace
	Foreign material	Eliminate the foreign material and check; replace the parts if necessary
	Insufficient oil	Refill
Gear noise while driving	Poor gear engagement Improper gear adjustment Improper drive pinion preload adjustment	Correct or replace
	Damaged gear	Replace
	Foreign material	Eliminate the foreign material and check; replace the parts if necessary
	Insufficient oil	Refill
Gear noise while coasting	Improper drive pinion preload adjustment	Correct or replace
	Damaged gear	Replace
Bearing noise while driving or coasting	Cracked or damaged drive pinion rear bearing	Replace
Noise while turning	Loose side bearing Damaged side gear, pinion gear or pinion shaft	Replace
Heat	Improper gear backlash Excessive preload	Adjust
	Insufficient oil	Refill

Symptom	Probable cause	Remedy
Oil leakage	Clogged vent plug	Clean or replace the parts
	Cover insufficiently tightened Seal malfunction	Retighten, apply sealant, or replace the gasket
	Worn or damaged oil seal	Replace
DIFFERENTIAL (LIMITED SLIP DIFFERENTIAL) Abnormal noise during driving or gear changing	Excessive final drive gear backlash Insufficient drive pinion preload	Adjust
	Excessive differential gear backlash	Adjust or replace
	Worn spline of a side gear	Replace
	Loose spline coupling self-locking nut	Retighten or replace
NOTE In addition to a malfunction of the differential carrier components, abnormal noise can also be caused by the universal joint of the propeller shaft, the axle shafts, the wheel bearings, etc. Before disassembling any parts, take all possibilities into consideration and confirm the source of the noise.		
Abnormal noise when cornering	Damaged differential gears Damaged pinion shaft Nicked and/or abnormal wear of inner and outer clutch plates Contaminated gear oil	Replace
	Insufficient gear oil quantity	Refill
Gear noise	Improper final drive gear tooth contact adjustment	Adjust or replace
	Incorrect final drive gear backlash Improper drive pinion preload adjustment	Adjust
	Damaged, broken, and/or seized tooth surfaces of the drive gear and drive pinion Damaged, broken, and/or seized drive pinion bearings Damaged, broken, and/or seized side bearings Damaged differential case Contaminated gear oil	Replace
	Insufficient gear oil quantity	Refill
NOTE Noise from the engine, muffler vibration, transmission, propeller shaft, wheel bearings, tires, body, etc., is easily mistaken as being caused by malfunctions in the differential carrier components. Be extremely careful and attentive when performing the driving test, etc. Test methods to confirm the source of the abnormal noise include: coasting, acceleration, constant speed driving, raising the rear wheels on a jack, etc. Use the method most appropriate to the circumstances.		
Gear oil leakage	Worn or damaged front oil seal, or an improperly installed oil seal Damaged gasket	Replace
	Loose spline coupling self-locking nut	Retighten or replace
	Loose filler or drain plug	Retighten or apply adhesive
	Clogged or damaged vent plug	Clean or replace

Symptom	Probable cause	Remedy
Seizure	Improper final drive gear backlash Excessive drive pinion preload Excessive side bearing preload Improper differential gear backlash Excessive clutch plate preload	Adjust
	Contaminated gear oil	Replace
	Insufficient gear oil quantity	Refill
NOTE In the event of seizure, disassemble and replace the parts involved, and also be sure to check all components for any irregularities and repair or replace as necessary.		
Breakdown	Incorrect final drive gear backlash Incorrect drive pinion preload Incorrect side bearing preload Excessive differential gear backlash Insufficient clutch plate preload	Adjust
	Loose drive gear clamping bolts	Retighten
	Operational malfunction due to overloaded clutch	Avoid excessively rough operation
NOTE In addition to disassembling and replacing the failed parts, be sure to check all components for irregularities and repair or replace as necessary.		
The limited slip differential does not function (on snow, mud, ice, etc.)	The limited slip device is damaged	Disassemble, check the functioning, and replace the damaged parts

SERVICE ADJUSTMENT PROCEDURES

N03FAAC

CHECKING REAR AXLE TOTAL BACKLASH

1. If the vehicle vibrates and produces a booming sound du to the imbalance of the driving system, measure the rear axle total backlash by the following procedures to see if the differential carrier assembly requires removal.
   (1) Place the gearshift lever in the neutral position, apply the parking brake and jack up the vehicle.

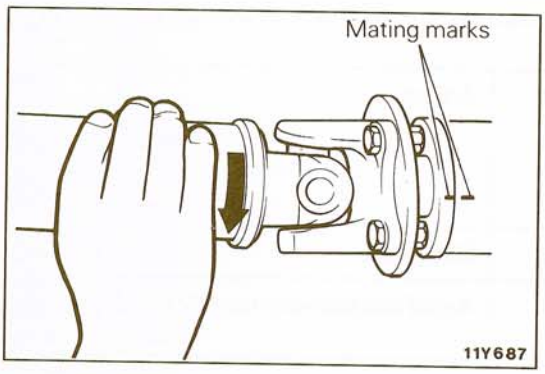

   (2) Turn the companion flange fully clockwise. Make the mating mark on the dust cover of the companion flange and on the torque tube.

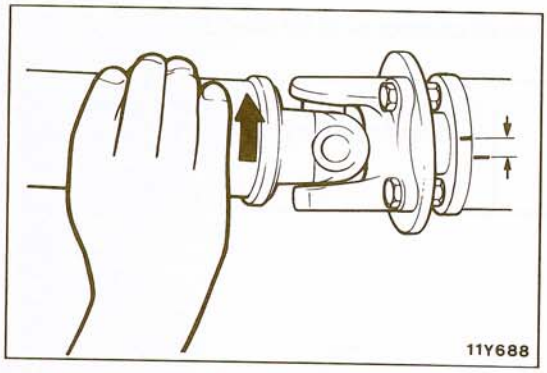

   (3) Turn the companion flange fully counter-clockwise, and measure the amount of distance through which the mating marks moved.

   Limit: 5 mm (0.2 in.)

2. If the backlash exceeds the limit, remove the differential carrier assembly and adjust the backlash.

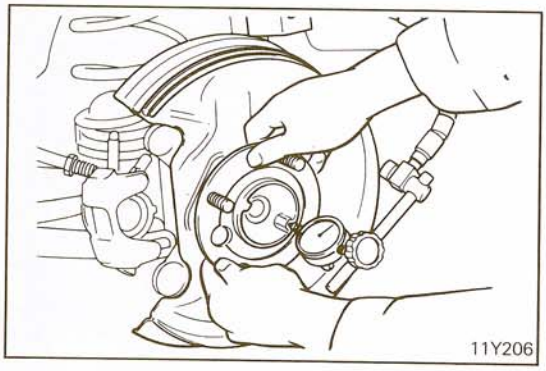

CHECKING AXLE SHAFT FOR AXIAL PLAY

N03FBAC

1. Measure the axle shaft for axial play by using a dial indicator.

   Limit: 0.8 mm (0.031 in.)

2. If the axle shaft axial play exceeds the limit, replace the bearing.

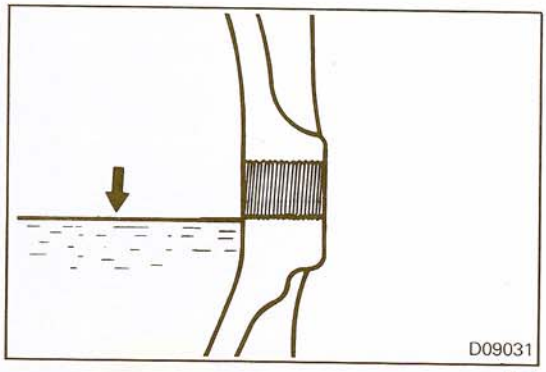

CHECKING GEAR OIL LEVEL

N03FCAA

1. Remove the level plug, and check the oil level.
2. The oil level is sufficient if it reaches the level plug hole.

STB Revision

LIMITED SLIP DIFFERENTIAL PRELOAD MEASUREMENT

N03FDAA

1. To measure the preload of the limited slip differential, set the shift lever of the transmission to the neutral position, lock the front wheels, and fully release the parking brake. One of the rear wheels should be maintained in contact with the ground surface, and the other should be raised up.

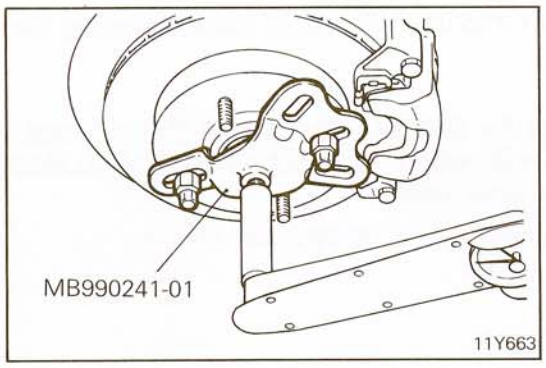

2. Measure the starting torque at the side on which the wheel is in the raised position by using the following procedures:
   (1) Remove the wheel.
   (2) Mount the special tool to the hub bolts by using the hub nuts.
   (3) Find the limited slip differential preload by measuring the axle shaft starting torque in the forward direction with a torque wrench.

   Standard value: 39 Nm (28 ft.lbs.) or more

   NOTE
   This value includes the dragging torque 4 Nm (3 ft.lbs.) of the disc brake.

   (4) If the torque is less than the standard value, remove the limited slip differential from the vehicle and disassemble it.

REPLACEMENT OF DIFFERENTIAL CARRIER OIL SEAL

N03FGAB

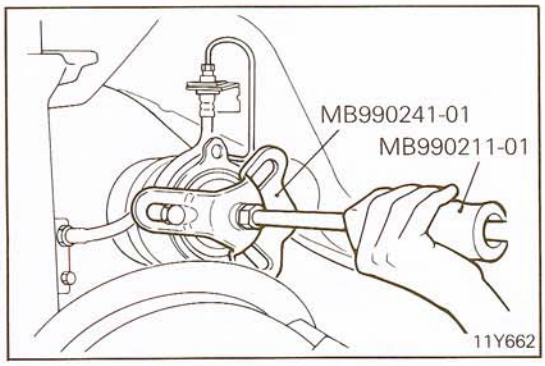

1. Detach the drive shaft and the companion flange.
2. Pull the drive shaft out from the differential carrier by using the special tools.

   Caution
   When pulling the drive shaft out from the differential carrier, be careful that the spline part of the drive shaft does not damage the oil seal.

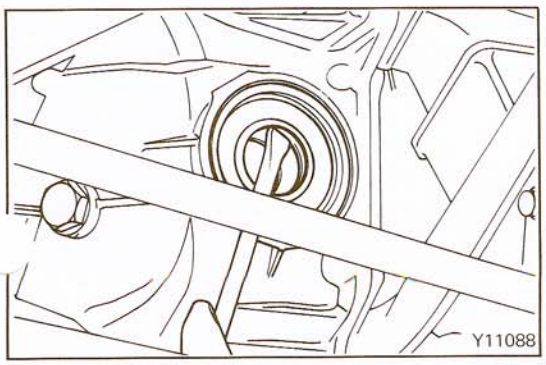

3. Remove the oil seal from the differential carrier.

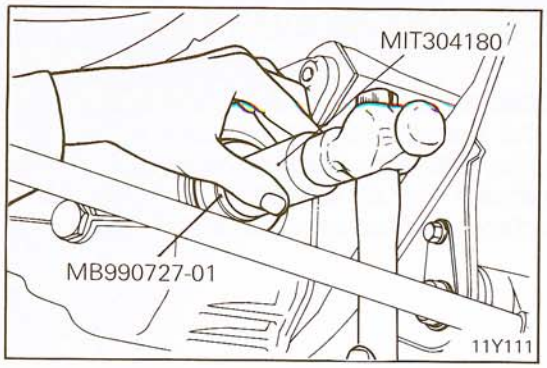

4. Press-fit the oil seal positively with the special tool and apply the specified grease to the oil seal lip.

Specified grease: Multipurpose grease SAE J310, NLGI No. 2

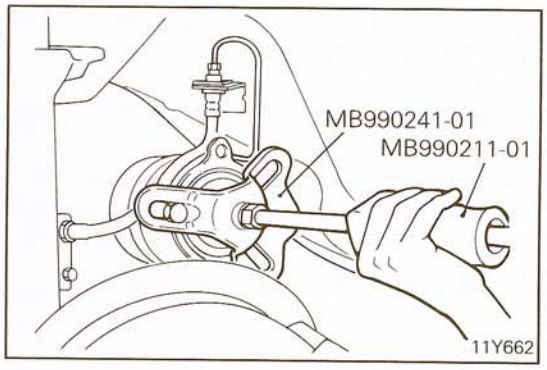

5. Drive the drive shaft into the differential carrier by using the special tools.

Caution

1. **Be careful not to damage the lip of the oil seal.**
2. **Replace the circlip which is attached to the B.J. side spline with a new one.**

6. Install the drive shaft to the companion flange.

AXLE SHAFT

N03HA--

REMOVAL AND INSTALLATION

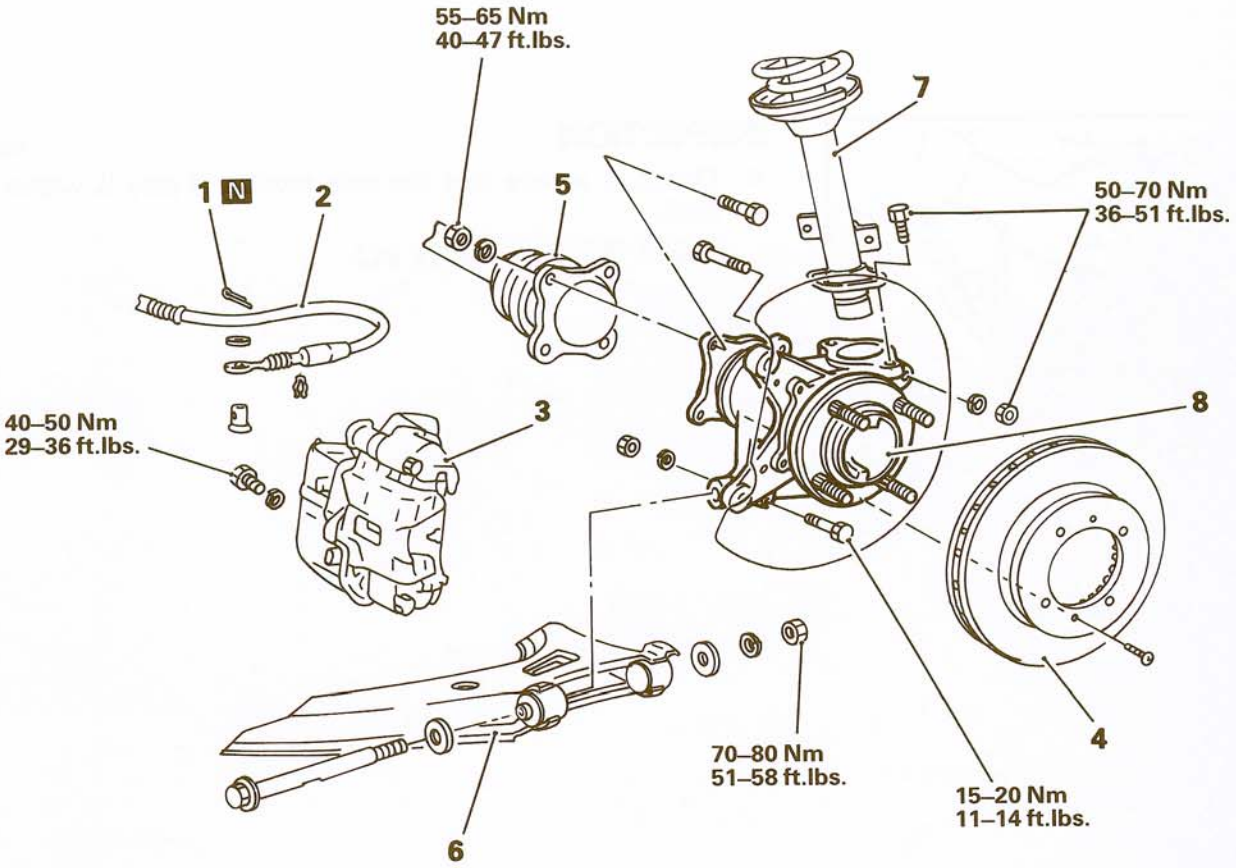

Removal steps

1. Cotter pin
2. Parking brake cable connection
3. ◆◆ Rear brake assembly connection
4. Brake disc
5. Drive shaft connection
6. Lower control arm connection
7. Strut assembly connection
8. Axle housing assembly

NOTE
(1) Reverse the removal procedures to reinstall.
(2) ◆◆: Refer to "Service Points of Removal".
(3) N: Non-reusable parts

11Y671

SERVICE POINT OF REMOVAL

N03HBAC

3. DISCONNECTION OF REAR BRAKE ASSEMBLY

Hold the caliper body by suspending it with wires or other suitable method so that the brake hoses are not twiste

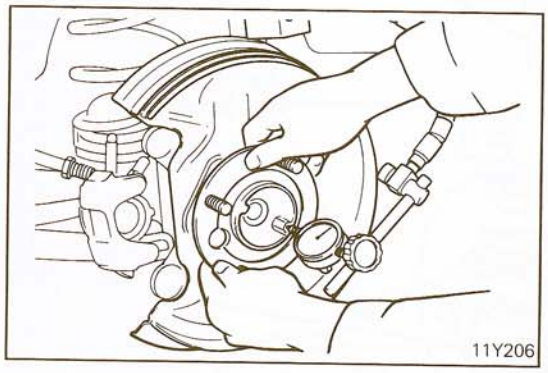

INSPECTION

N03HCAB

- Check to assure that the axle shaft end play is within the limit.

  Limit: 0.8 mm (0.031 in.)

AXLE SHAFT

N03HE- -

DISASSEMBLY AND REASSEMBLY

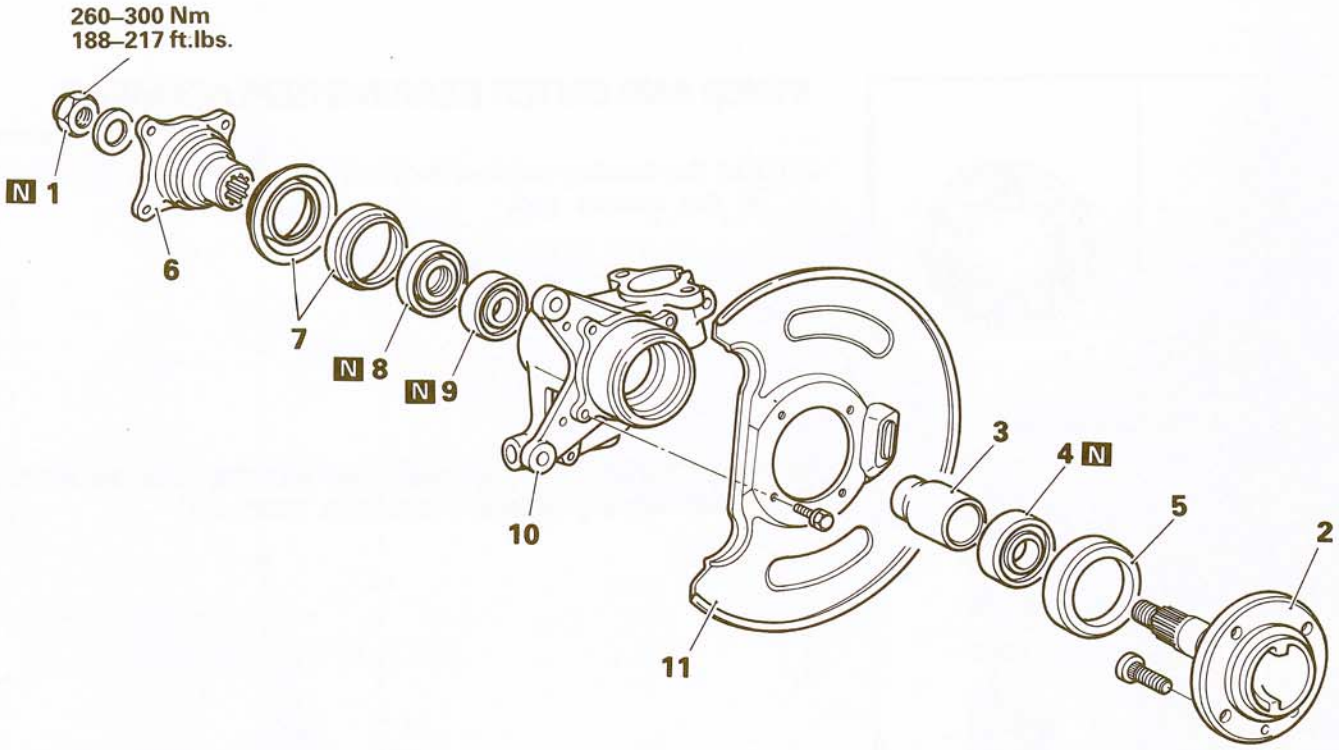

Disassembly steps

1. Companion flange mounting nut (self-locking nut)
◆◆ 2. Axle shaft
3. Spacer
4. Outer bearing
5. Dust cover
6. Companion flange
7. Dust cover
◆◆ 8. Oil seal
9. Inner bearing
10. Axle housing
11. Dust cover

NOTE
(1) Reverse the disassembly procedures to reassemble.
(2) ◆◆: Refer to "Service Points of Disassembly".
(3) ◆◆: Refer to "Service Points of Reassembly".
(4) N: Non-reusable parts

11Y673

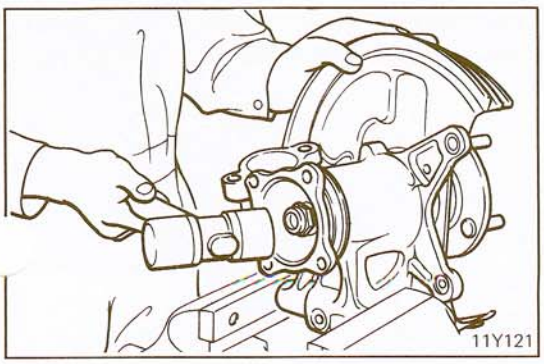

SERVICE POINT OF DISASSEMBLY

N03HFAA

2. REMOVAL OF AXLE SHAFT

Loosen the companion flange mounting nut, and then tap the axle shaft out of the axle housing by using a plastic hammer.

Caution
Be careful not to scratch the oil seal.

STB Revision

INSPECTION

N03HGAA

- Check companion flange for wear and damage.
- Check dust cover for deformation and damage.
- Check oil seal for damage.
- Check inner and outer bearings for seizure, discolourati and rough raceway surface.
- Check axle shaft for cracks, wear and damage.

INNER AND OUTER BEARING REPLACEMENT

N03HHAB

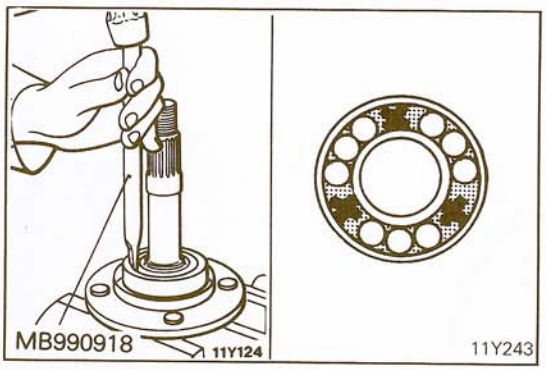

(1) Cut the bearing retainer in three places by using the chisel of the special tool.

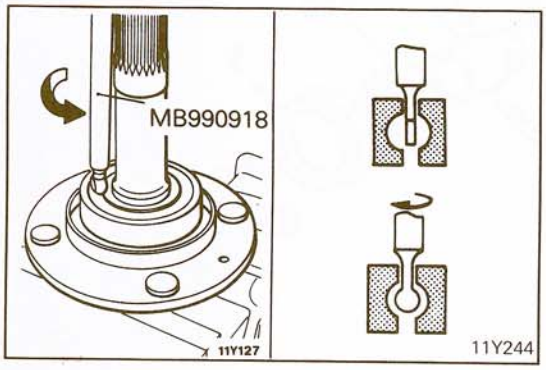

(2) Insert the claws of the special tool into the three places cut in the bearing retainer, and turn them 90°.

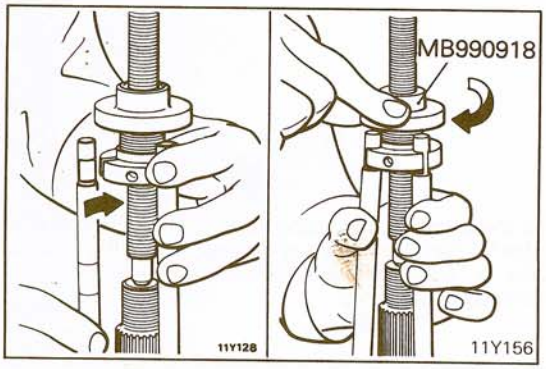

(3) Fit the claws into the slots in the body of the special tool and tighten the claw nut of the special tool in order to secure the claws tightly.

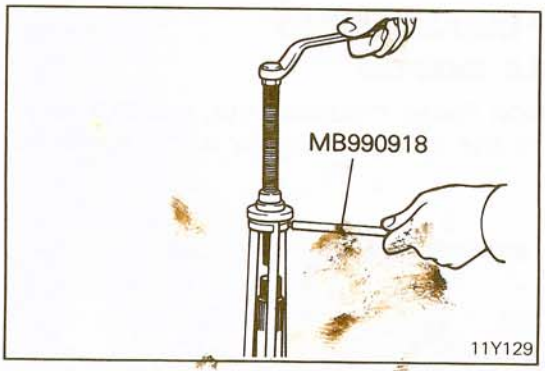

(4) Tighten the centre bolt while using the handle to support the body of the special tool and then extract the bearing.

STB Revision

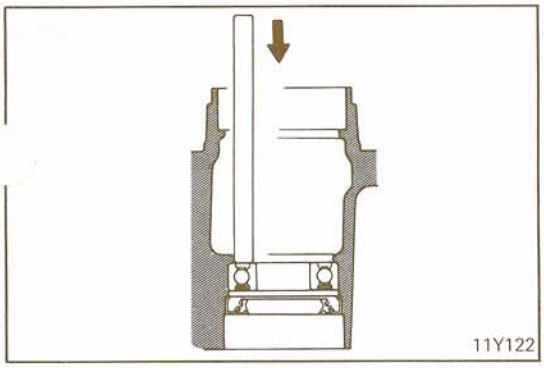

(5) Drive out the inner bearing from the axle housing and oil seal by using a bar.

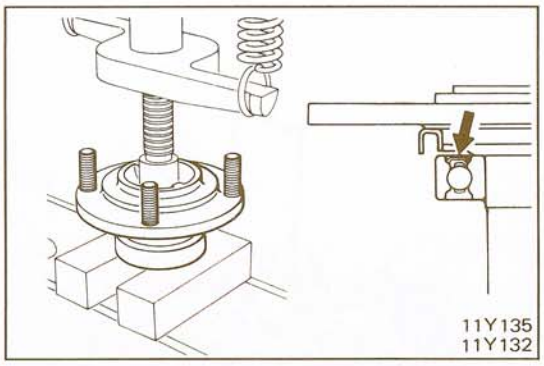

(6) Press-fit the new outer bearing to the axle shaft.

NOTE
The seal side of the outer bearing should face the flange side of the axle shaft.

(7) Apply specified grease to the inside surface of the axle housing.

Specified grease: Multipurpose grease SAE J310, NLGI No. 2 [85g (3.0 oz.)]

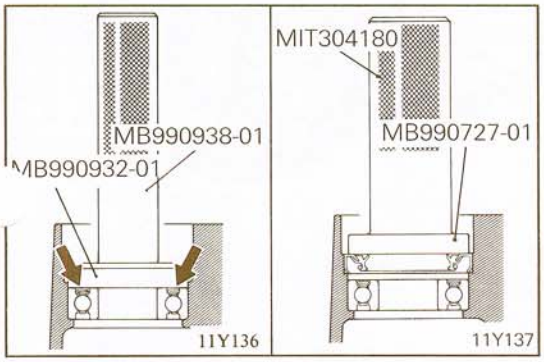

(8) Position the new inner bearing so that the seal side faces the companion flange, and then press-fit the bearing.

(9) Apply the specified grease to the area of the axle housing where the oil seal is to be press-fitted, and then use the special tool to drive the oil seal in until it comes into contact with the edge of the axle housing.

Specified grease: Multipurpose grease SAE J310, NLGI No. 2

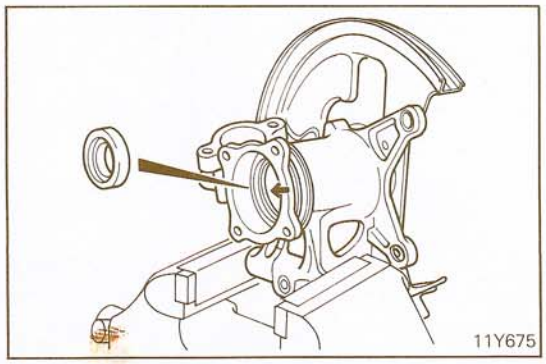

SERVICE POINT OF REASSEMBLY

N03HIAB

8. APPLICATION OF GREASE TO OIL SEAL

Apply specified grease to the oil seal lip.

Specified grease: Multipurpose grease SAE J310, NLGI No. 2

DRIVE SHAFT

N03JA- -

REMOVAL AND INSTALLATION

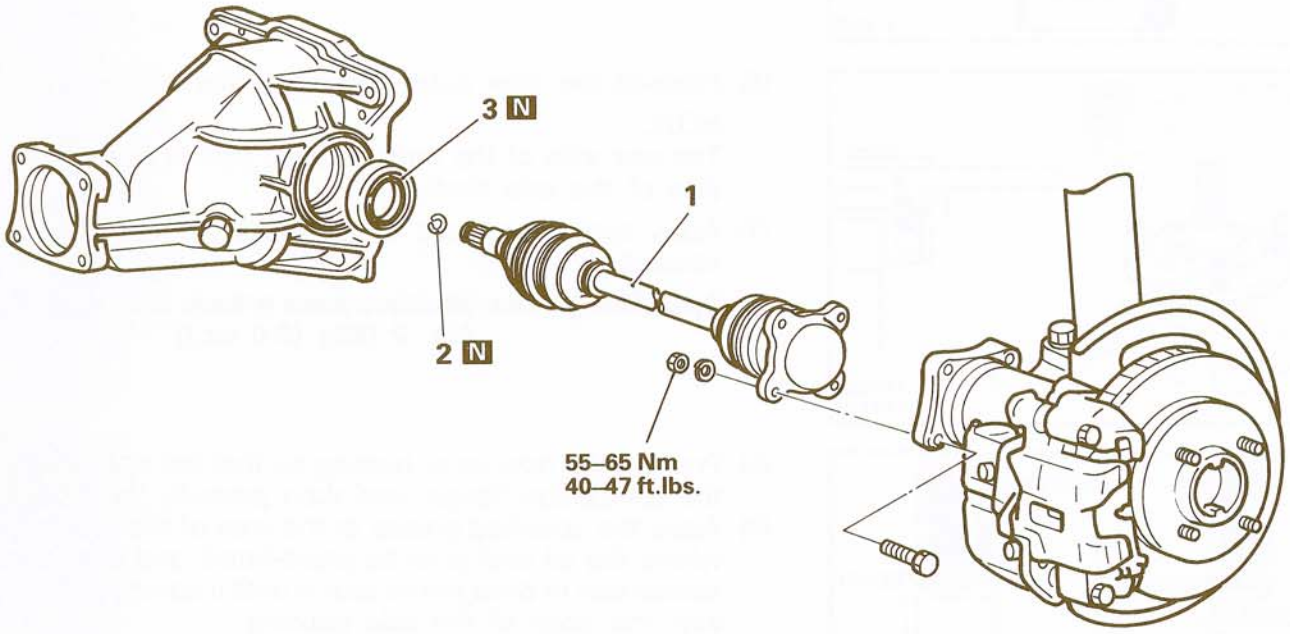

Removal steps

◆◆ ▸◆ 1. Drive shaft assembly
2. Circlip
▸◆ 3. Oil seal

NOTE
(1) Reverse the removal procedures to reinstall.
(2) ◆◆: Refer to "Service Points of Removal".
(3) ▸◆: Refer to "Service Points of Installation".
(4) N : Non-reusable parts

11Y676

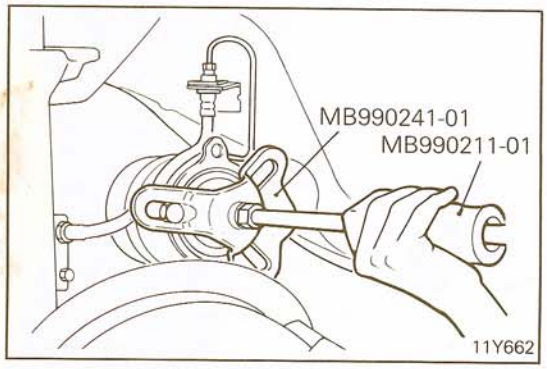

SERVICE POINT OF REMOVAL

N03JBAB

1. REMOVAL OF DRIVE SHAFT ASSEMBLY

Pull the drive shaft out from the differential carrier by using the special tools.

Caution
When pulling the drive shaft out from the differential carrier, be careful that the spline part of the drive shaf does not damage the oil seal.

STB Revision

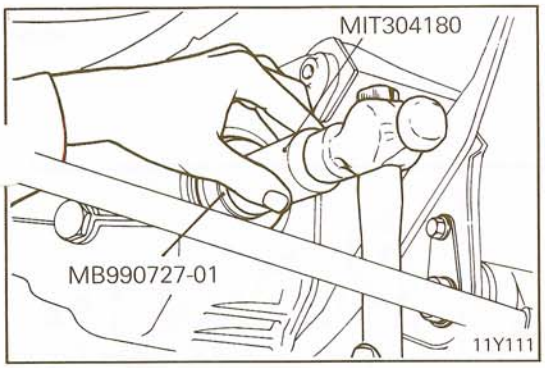

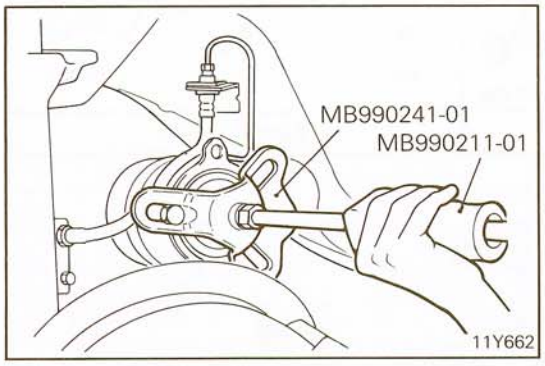

SERVICE POINTS OF INSTALLATION N03JCAB

2. INSTALLATION OF OIL SEAL

(1) If the oil seal is to be replaced because of damage, drive it in by using the special tool.
(2) Apply the specified grease to the oil seal lip.

Specified grease: Multipurpose grease SAE J310, NLGI No. 2

1. INSTALLATION OF DRIVE SHAFT ASSEMBLY

Drive the drive shaft into the differential carrier by using the special tools.

Caution

1. **Be careful not to damage the lip of the oil seal.**
2. **Before and after connecting the drive shaft with the companion flange, slide the drive shaft axially to check that it does not come off the differential carrier.**

DRIVE SHAFT

N03JD- -

DISASSEMBLY AND REASSEMBLY

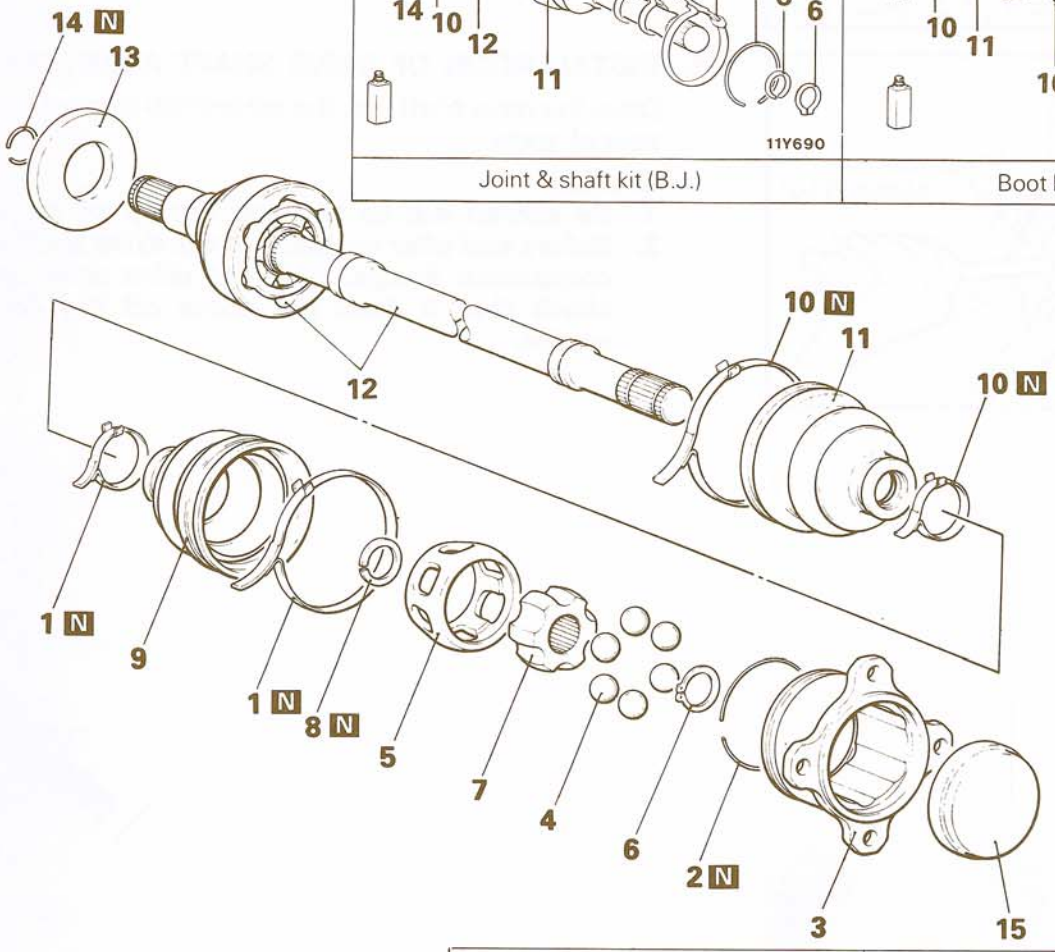

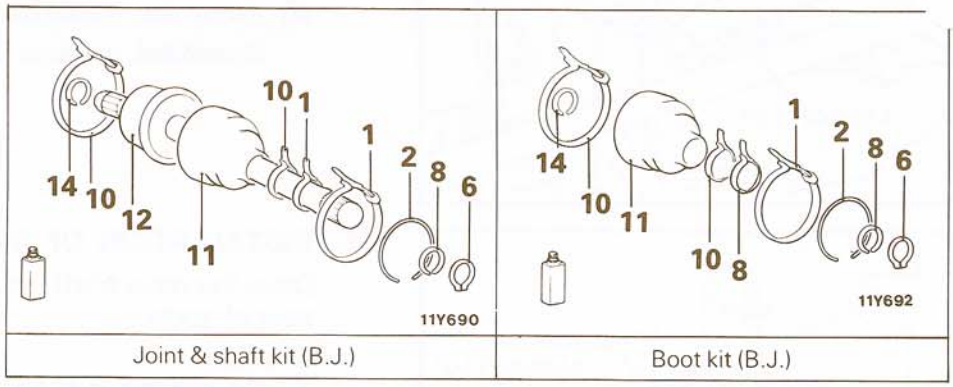

Joint & shaft kit (B.J.) | Boot kit (B.J.)

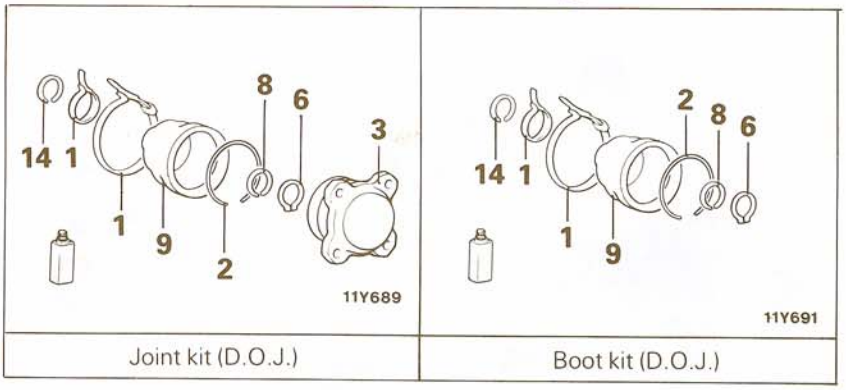

Joint kit (D.O.J.) | Boot kit (D.O.J.)

Disassembly steps

- ◆◆ 1. Boot bands (for D.O.J. boot)
- 2. Circlip
- ◆◆ 3. D.O.J. outer race
- ◆◆ 4. Balls
- ◆◆ ◆◆ 5. D.O.J. cage
- 6. Snap ring
- ◆◆ 7. D.O.J. inner race
- 8. Circlip
- ◆◆ 9. D.O.J. boot
- 10. Boot bands (for B.J. boot)
- ◆◆ ◆◆ 11. B.J. boot
- ◆◆ 12. B.J. and shaft assembly
- 13. Dust cover
- 14. Circlip
- 15. End plate

NOTE
(1) Reverse the disassembly procedures to reassemble.
(2) ◆◆: Refer to "Service Points of Disassembly".
(3) ◆◆: Refer to "Service Points of Reassembly".
(4) The drive shaft joint requires special grease. Do not use any other type.
(5) N: Non-reusable parts

Y11540

STB Revision

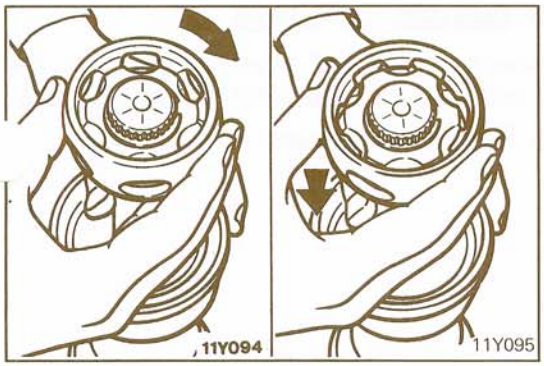

SERVICE POINTS OF DISASSEMBLY N03JEAA

5. REMOVAL OF D.O.J. CAGE

Remove the D.O.J. cage from the D.O.J. inner race in the direction of the B.J.

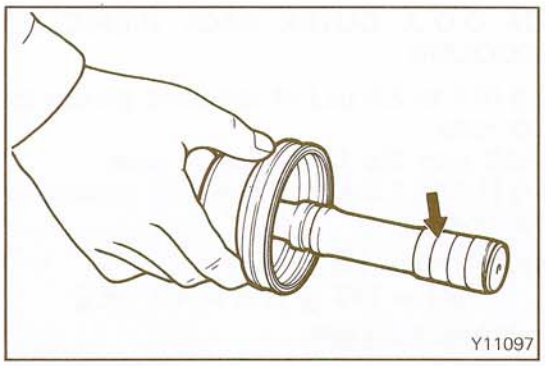

9. REMOVAL OF D.O.J. BOOT / 11. B.J. BOOT

Wrap vinyl tape around the spline part on the D.O.J. side of the drive shaft so that the D.O.J. and B.J. boots are not damaged when they are removed.

12. B.J. AND SHAFT ASSEMBLY

Caution
B.J. cannot be disassembled. Do not attempt to disassemble.

INSPECTION N03JFAA

- Check drive shaft for bend and wear.
- Check B.J. for entry of water, foreign matter and rust.
- Check B.J. ball for damage.
- Check D.O.J. cage, D.O.J. inner race and ball for rust, wear and damage.
- Check D.O.J. outer race for wear and damage.

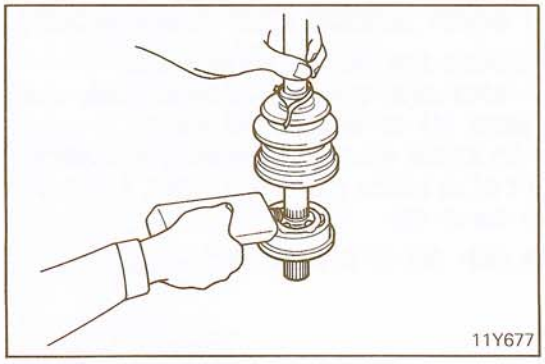

SERVICE POINTS OF REASSEMBLY N03JGAA

11. APPLICATION OF GREASE TO B.J. BOOT

If the B.J. is to be reused, pack the specified grease into the B.J. boot.

Specified grease:
Repair kit grease
Vehicle without intercooler
80 – 100 g (28 – 3.5 oz)
Vehicle with intercooler
95 – 115 g (3.4 – 4.1 oz)

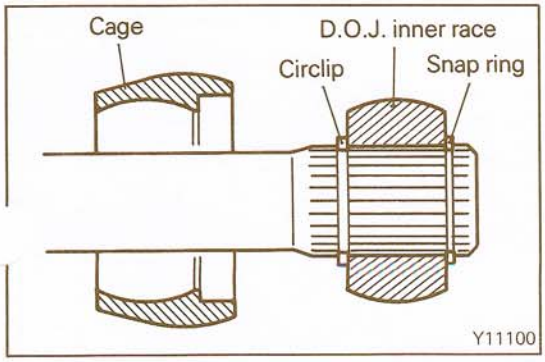

7. INSTALLATION OF D.O.J. INNER RACE / 5. D.O.J. CAGE

(1) Install the D.O.J. cage onto the drive shaft so that the smaller diameter side of the cage is installed first.
(2) Install the circlip on the drive shaft.
(3) Install the D.O.J. inner race onto the drive shaft, and secure it with a snap ring.
(4) Apply specified grease to the D.O.J. inner race and the D.O.J. cage, and then fit them together.

Specified grease: Repair kit grease

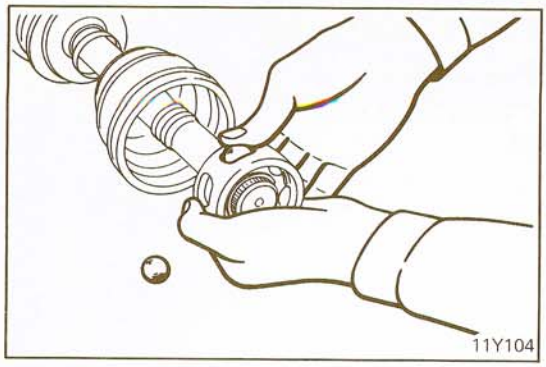

4. APPLICATION OF GREACE TO BALLS

Apply specified grease to the ball insertion parts of the D.O.J. inner race and D.O.J. cage, and insert the balls.

Specified grease: Repair kit grease

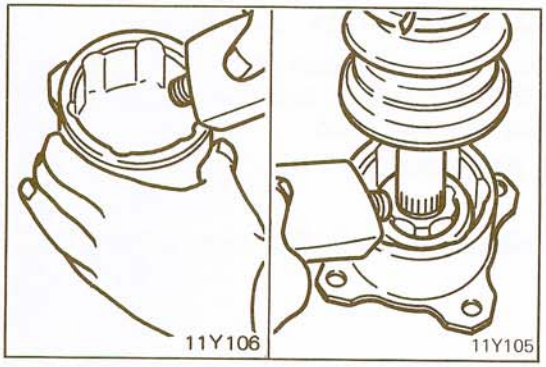

3. INSTALLATION OF D.O.J. OUTER RACE (VEHICLES WITHOUT INTERCOOLER)

(1) Apply 60 to 70 g (2.1 to 2.5 oz.) of specified grease to the D.O.J. outer race.
(2) Fit the drive shaft into the D.O.J. outer race.
(3) Apply 35 to 45 g (1.2 to 1.6 oz.) of specified grease to the D.O.J. outer race.

Specified grease: Repair kit grease
[95 – 115 g (3.4 – 4.1 oz.)]

(VEHICLES WITH INTERCOOLER)

(1) Apply 65 to 75 g (2.3 to 2.6 oz.) of specified grease to the D.O.J. outer race.
(2) Fit the drive shaft into the D.O.J. outer race.
(3) Apply 45 to 55 g (1.6 to 1.9 oz.) of specified grease to the D.O.J. outer race.

Specified grease: Repair kit grease
[110 – 130g (3.9 – 4.6 oz.)]

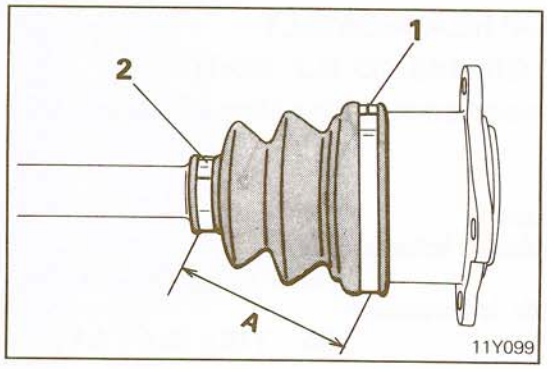

1. INSTALLATION OF BOOT BANDS (FOR D.O.J. BOOT)

(1) Install the circlip onto the D.O.J. outer race.
(2) Place the D.O.J. boot over the D.O.J. outer race, and then use boot band (1) to secure the boot.
(3) Place boot band (2) at the specified distance in order to adjust the amount of air inside the D.O.J. boot, and then tighten the boot band (2).

Standard value (A): 80 ± 3 mm (3.1 ± 0.1 in.)

TORQUE TUBE

N03KA- -

REMOVAL AND INSTALLATION

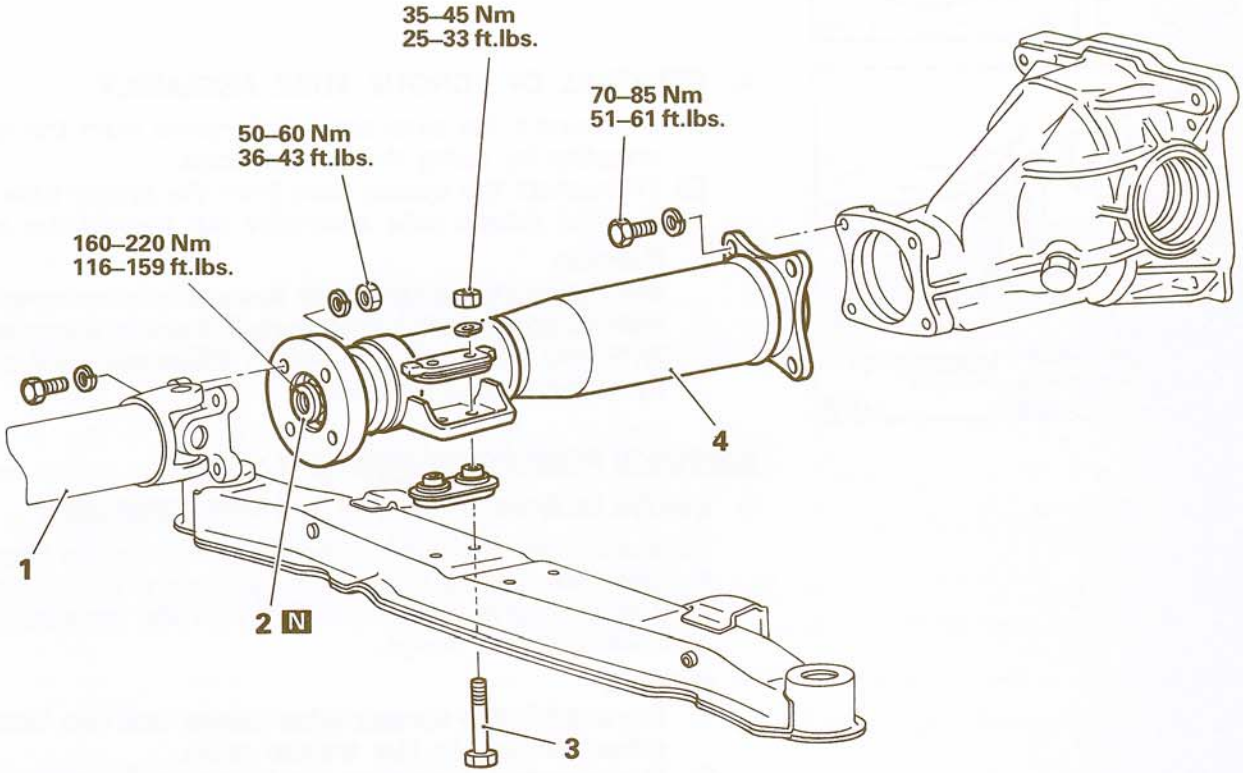

Removal steps

- 1. Propeller shaft
- ◆◆ Measurement of companion flange runout
- ◆◆ 2. Companion flange mounting nut (Self-locking nut)
- ◆◆ 3. Torque tube assembly to front support bolt
- ◆◆ ◆◆ 4. Torque tube assembly

NOTE
(1) Reverse the removal procedures to reinstall.
(2) ◆◆: Refer to "Service Points of Removal".
(3) ◆◆: Refer to "Service Points of Installation".
(4) N: Non-reusable parts

11Y678

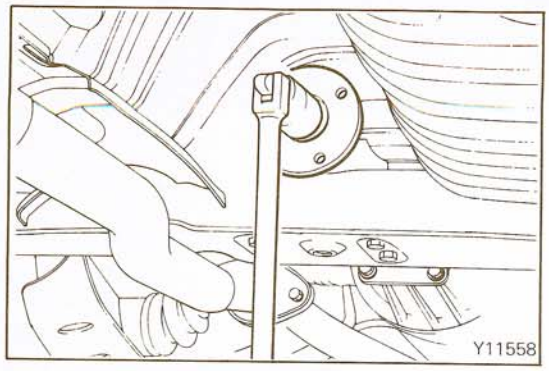

SERVICE POINTS OF REMOVAL N03KBAA

2. REMOVAL OF COMPANION FLANGE MOUNTING NUT

Hold the extension shaft by applying the parking brake, and loosen the companion flange mounting nut.

NOTE
The nut should only be loosened, not removed.

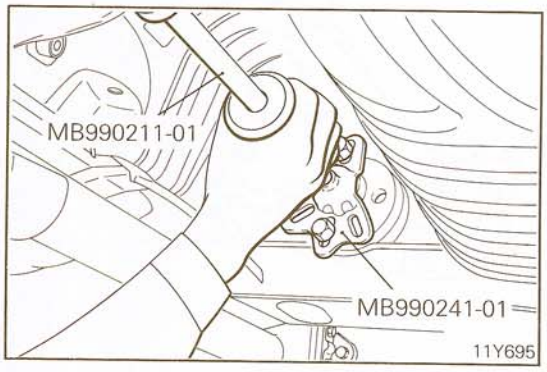

4. REMOVAL OF TORQUE TUBE ASSEMBLY

(1) Disconnect the extension shaft spline from the spline coupling by using the special tools.
(2) Disconnect the special tools from the torque tube, and pull the torque tube assembly out toward the rear.

Caution
Whenever the torque tube assembly is removed, be sure to disassemble and install them in accordance with the specified procedure. Otherwise the damaged bearing will result.

SERVICE POINTS OF INSTALLATION N03KCAB

4. INSTALLATION OF TORQUE TUBE ASSEMBLY

Drive the extension shaft in the differential spline coupling by using the special tools until the surface of the torque tube flange comes fully in contact with the surface of the differential carrier flange.

Caution
1. **Do not hit the torque tube flange and the bracket when driving in the torque tube.**
2. **If a clearance between the torque tube flange and the differential carrier flange exists, and the torque tube and the differential carrier are connected to each other, the ball bearing may be pre-loaded and seizured.**

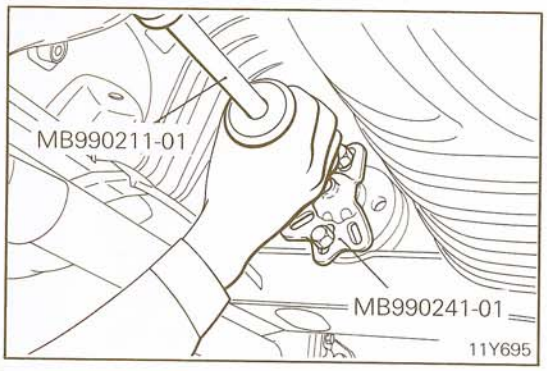

If there is clearance between the torque tube and differential carrier flange, proceed as follows:
(1) Remove the torque tube assembly.
(2) Disassemble the torque tube assembly. (Refer to P.3-32.)
(3) Apply the specified grease to the pocket and the spline part of the differential side of the extension shaft. (Refer to P.3-33.)

Specified grease: Multipurpose grease SAE J310, NLGI No. 2

(4) Insert the extension shaft into the torque tube.
(5) Drive the extension shaft into the differential spline coupling.
(6) Install the torque tube onto the differential carrier and front support.

(7) Drive the bearing into the extension shaft by using the special tool. (Refer to P.3-33.)

NOTE
Continue driving the bearing in until the flange surface of the special tool comes in contact with the edge of the torque tube.

(8) Install the snap ring by using snap ring pliers to secure the bearing in place.
(9) Install the companion flange by properly aligning the mating marks.

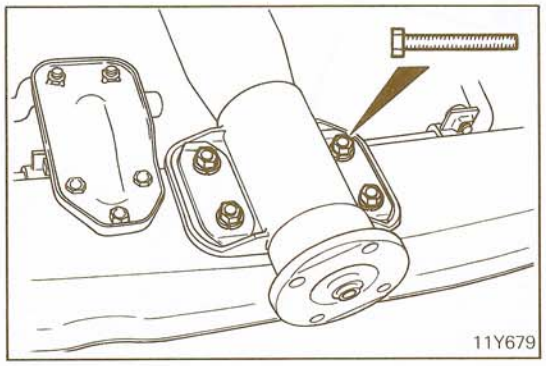

3. APPLICATION OF OIL TO TORQUE TUBE ASSEMBLY TO FRONT SUPPORT BOLT

Apply oil to the bolt on its entire surface before it is installed.

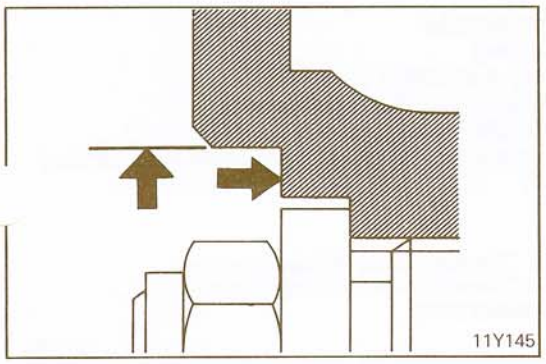

- **MEASUREMENT OF COMPANION FLANGE RUNOUT**

(1) Hold the extension shaft by applying the parking brake, and tighten the companion flange mounting nut.
(2) Measure companion flange runout with a dial indicator.
(3) If the companion flange runout exceeds the standard value, change the phase of the companion flange and extension shaft and measure the runout once again.

Standard value: 0.1 mm (0.004 in.)

TORQUE TUBE

N03KD- -

DISASSEMBLY AND REASSEMBLY

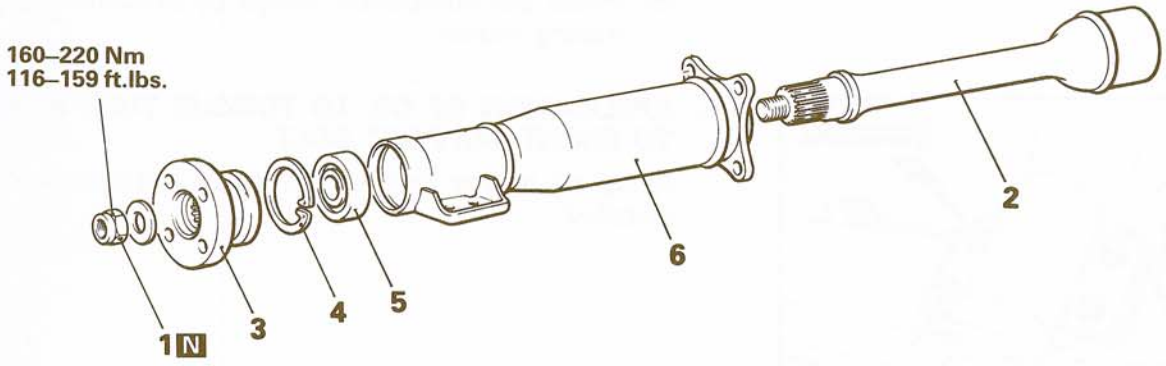

Disassembly steps

1. Companion flange mounting nut (Self-locking nut)
2. Extension shaft
3. Companion flange
4. Snap ring
5. Bearing
6. Torque tube

Reassembly steps

6. Torque tube
5. Bearing
2. Extension shaft
4. Snap ring
3. Companion flange
1. Companion flange mounting nut (Self-locking nut)

NOTE
(1) ◆◆: Refer to "Service Points of Disassembly".
(2) ◆◆: Refer to "Service Points of Reassembly".
(3) N: Non-reusable parts.

11Y154

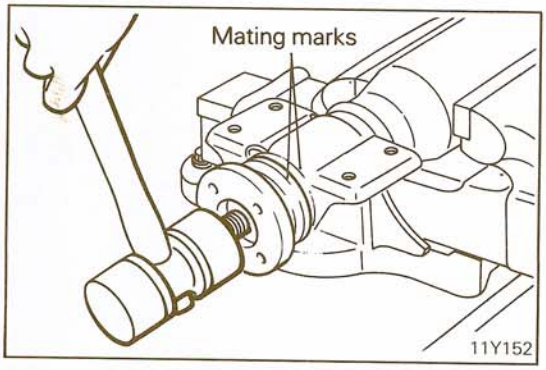

SERVICE POINTS OF DISASSEMBLY

N03KEAA

2. REMOVAL OF EXTENSION SHAFT / 3. COMPANION FLANGE

(1) Make the mating marks to the extension shaft and companion flange.
(2) Drive out the extension shaft from the torque tube with a plastic hammer.

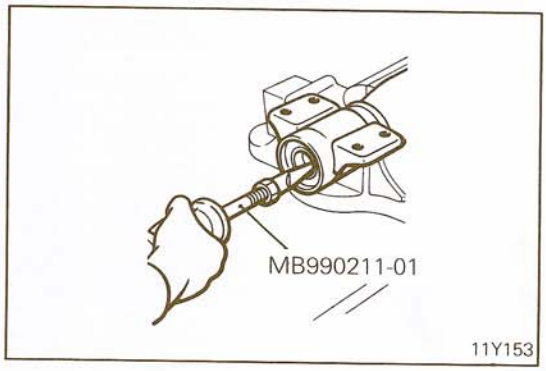

5. REMOVAL OF BEARING

Pull out the bearing from the torque tube by using the special tool.

STB Revision

INSPECTION

N03KFAA

- Check bearing for looseness and rotation.
- Check torque tube for cracks.
- Check extension shaft for bend, wear and damage.

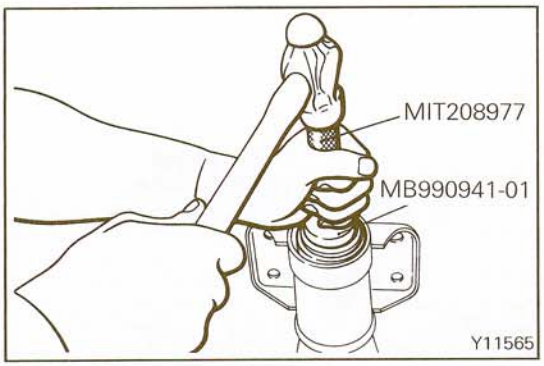

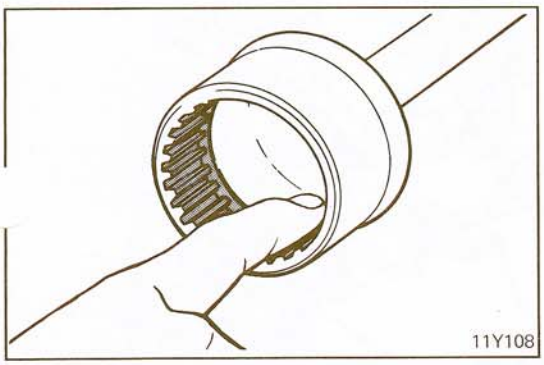

SERVICE POINTS OF REASSEMBLY

N03KGAB

5. INSTALLATION OF BEARING

Drive the bearing into the extension shaft by using the special tool.

NOTE
Continue driving the bearing in until the flange surface of the special tool comes in contact with the edge of the torque tube.

2. APPLICATION OF GREASE TO EXTENSION SHAFT

Apply the specified grease to the pocket and the spline part of the differential side of the extension shaft.

Specified grease: Multipurpose grease SAE J310, NLGI No. 2

3. INSTALLATION OF COMPANION FLANGE

Install the companion flange with mating marks properly aligned.

1. INSTALLATION OF COMPANION FLANGE MOUNTING NUT

Temporarily tighten the companion flange by using the companion flange mounting nuts.

NOTE
After mounted to the vehicle, tighten the companion flange mounting nut.

DIFFERENTIAL CARRIER

N03JA--

REMOVAL AND INSTALLATION

Pre-removal Operation
- Draining Gear Oil

Post-installation Operation
- Filling Gear Oil

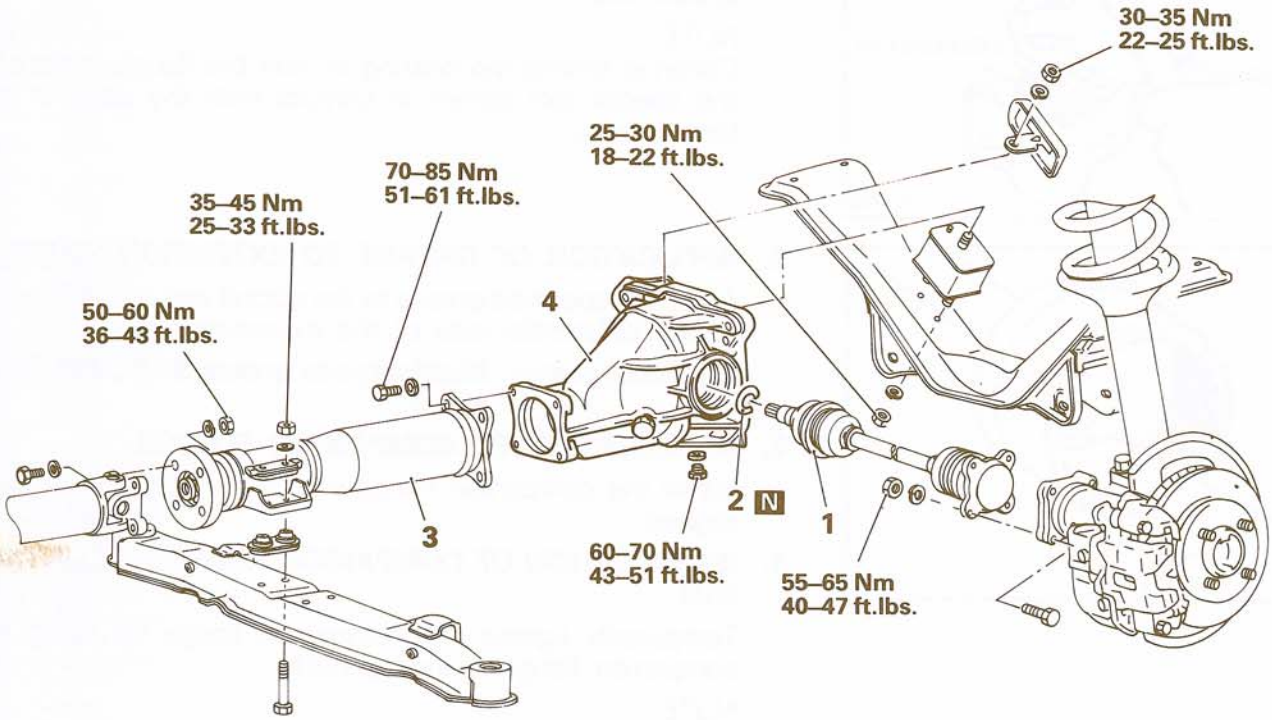

Removal steps

1. Drive shaft
2. Circlip
3. Torque tube
- ◆◆ 4. Differential carrier assembly

NOTE
(1) Reverse the removal procedures to reinstall.
(2) ◆◆: Refer to "Service Points of Removal".
(3) N: Non-reusable parts

11Y680

STB Revision

SERVICE POINT OF REMOVAL N03IBAC

4. DIFFERENTIAL CARRIER ASSEMBLY

Dismount the differential carrier from the rear support insulators by raising the differential carrier with a jack.

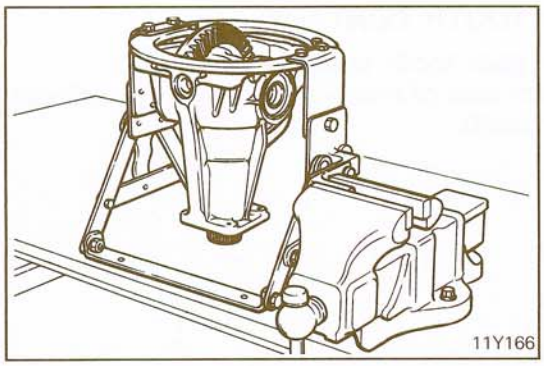

INSPECTION BEFORE DISASSEMBLY N03IEAA

Secure the working base in a vice and then install the removed differential carrier assembly.

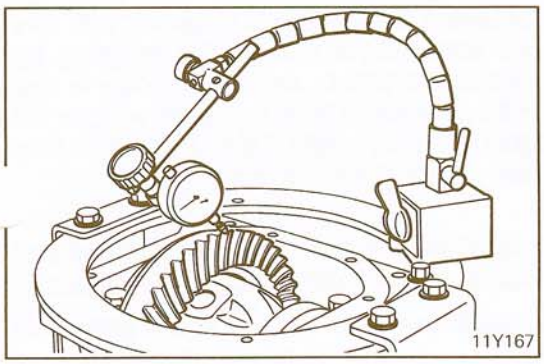

FINAL DRIVE GEAR BACKLASH

With the drive pinion locked in place, measure the final drive gear backlash with a dial indicator on the drive gear.

NOTE
Measure at four points or more on the circumference of the drive gear.

Standard value:
Vehicles with intercooler
0.13 – 0.18 mm (0.005 – 0.007 in.)
Vehicles without intercooler
0.11 – 0.16 mm (0.004 – 0.006 in.)

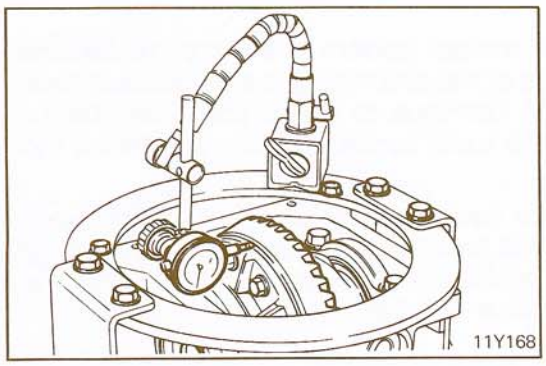

DRIVE GEAR RUNOUT

Measure the drive gear runout at the shoulder on the reverse side of the drive gear.

Limit: 0.05 mm (0.002 in.)

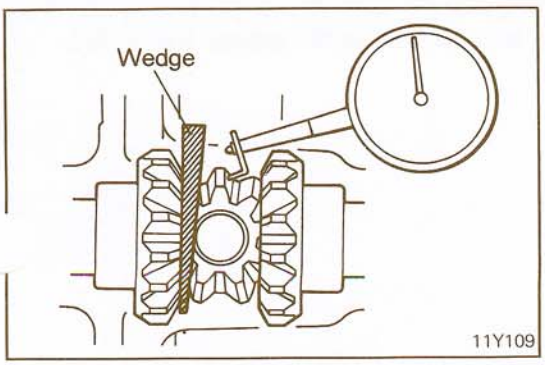

DIFFERENTIAL GEAR BACKLASH (CONVENTIONAL DIFFERENTIAL)

While locking the side gear with the wedge, measure the differential gear backlash with a dial indicator on the pinion gear.

Standard value: 0 – 0.076 mm (0 – 0.0030 in.)
Limit: 0.2 mm (0.0079 in.)

STB Revision

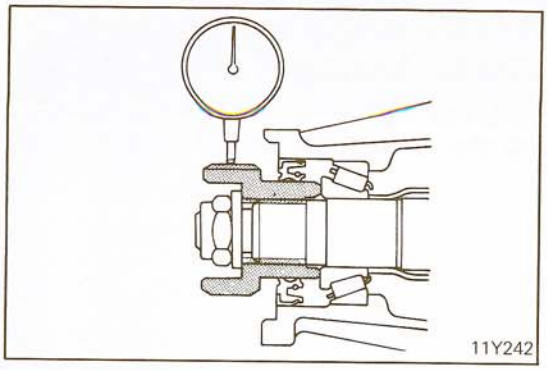

SPLINE COUPLING RUNOUT

Measure the spline coupling runout with a dial indicator.

Standard value: 0.1 mm (0.004 in.)

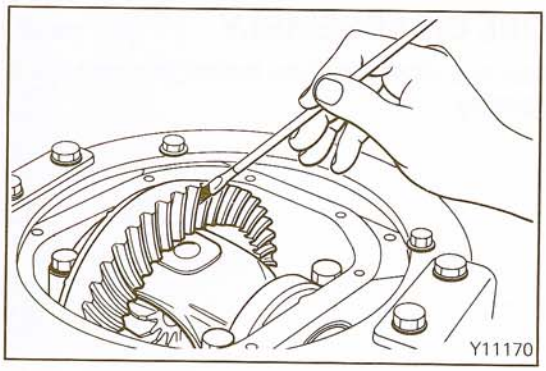

FINAL DRIVE GEAR TOOTH CONTACT

Check the final drive gear tooth contact as follows:

(1) Apply a thin, uniform coat of machine blue to both surfaces of the drive gear teeth.

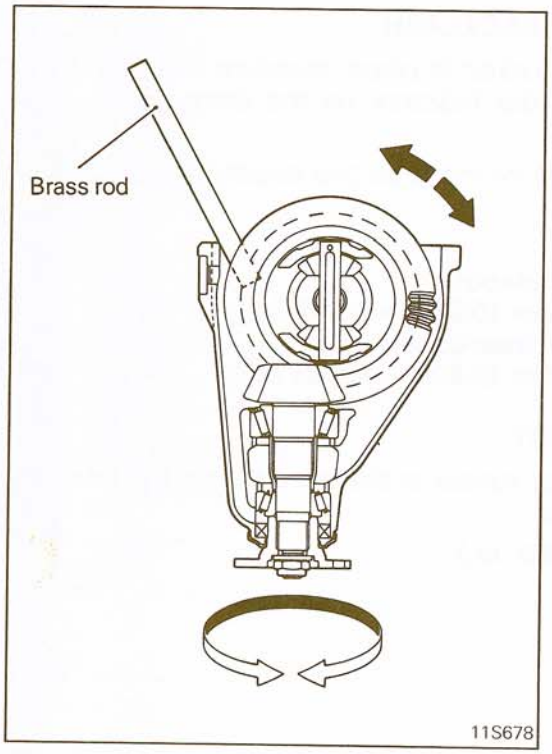

(2) Insert a brass rod between the differential carrier and the differential case, and then rotate the spline coupling by hand (once in the normal direction, and then once in the reverse direction) while applying a load to the drive gear so that the rotating torque [approximately 2.5 to 3.0 Nm (1.8 to 2.2 ft.lbs.)] is applied to the drive pinion.

Caution
If the drive gear is rotated too much, the tooth contact pattern will become unclear and difficult to check.

(3) Check the tooth contact condition of the drive gear and drive pinion.

NOTE
Checking the tooth contact pattern is the way to confirm that the adjustments of the pinion height and backlash have been done properly. Continue to adjust the pinion height and backlash until the tooth contact pattern resembles the standard pattern.

If, after adjustments have been made, the correct tooth contact pattern cannot be obtained, it means that the drive gear and the drive pinion have become worn beyond the allowable limit; replace the gear set.

Caution
If either the drive gear or the drive pinion is to be replaced, be sure to replace both gears as a set.

Standard tooth contact pattern

1 Toe
2 Drive-side
3 Heel
4 Coast-side

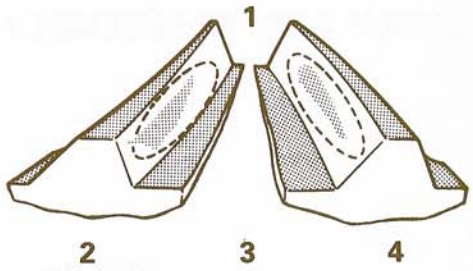

Problem	Solution
Tooth contact pattern resulting from excessive pinion height 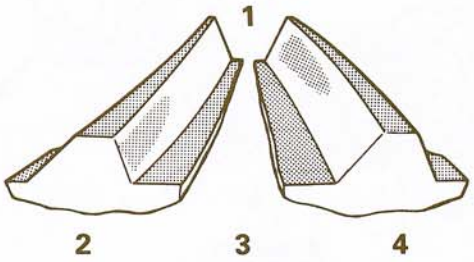	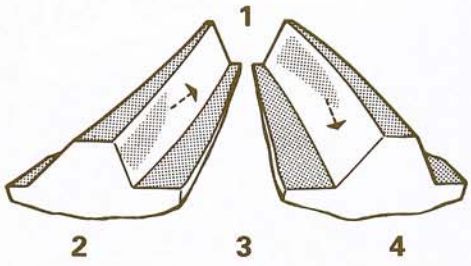
The drive pinion is positioned too far from the center of the drive gear.	Increase the thickness of the pinion height adjusting shim, and position the drive pinion closer to the center of the drive gear. Also, for backlash adjustment, position the drive gear farther from the drive pinion.
Tooth contact pattern resulting from insufficient pinion height 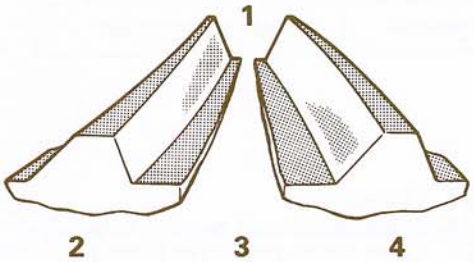	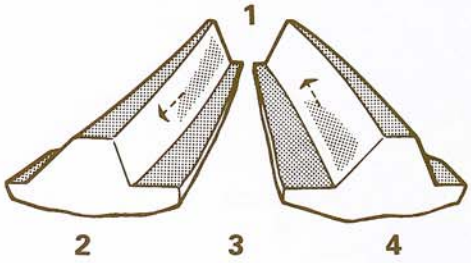
The drive pinion is positioned too close to the center of the drive gear.	Decrease the thickness of the pinion height adjusting shim, and position the drive pinion farther from the center of the drive gear. Also, for backlash adjustment, position the drive gear closer to the drive pinion.

11S642

DIFFERENTIAL CARRIER (Conventional Differential)

N03IU--

DISASSEMBLY AND REASSEMBLY

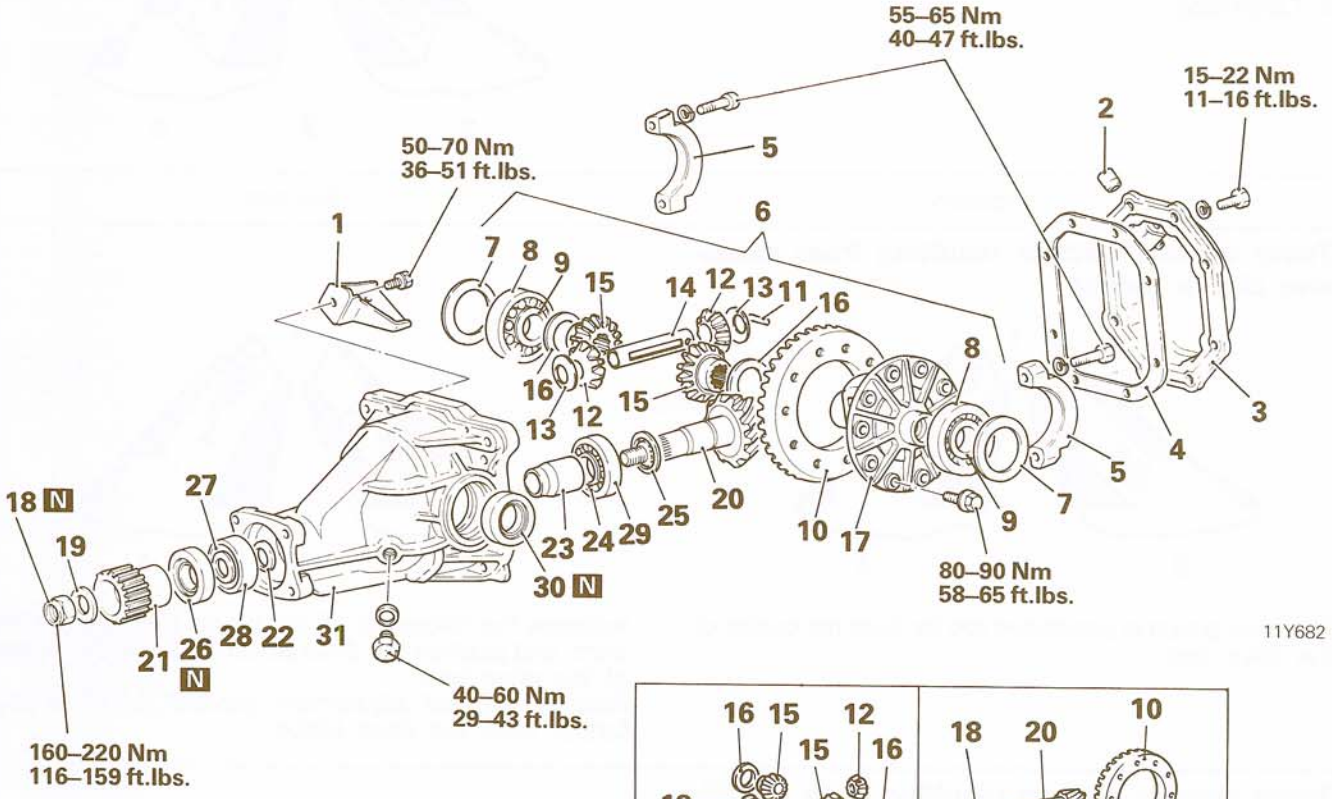

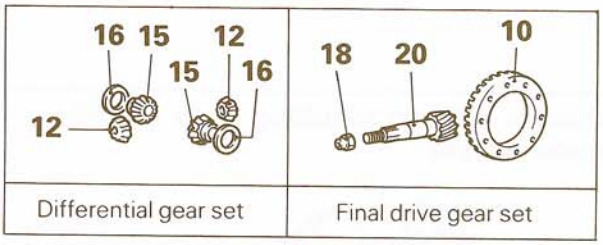

Disassembly steps

1. Rear supports
2. Vent plug
3. Cover
4. Gasket
5. Bearing cap
6. Differential case assembly
   - Final drive gear backlash adjustment
7. Side bearing adjusting spacer
8. Side bearing outer race
9. Side bearing inner race
10. Drive gear
11. Lock pin
12. Pinion gear
13. Pinion washer
14. Pinion shaft
15. Side gear
16. Side gear thrust spacer
17. Differential case
    - Differential gear backlash adjustment
18. Spline coupling mounting nut (Self-locking nut)
19. Washer
20. Drive pinion
24. Drive pinion rear bearing inner race
25. Drive pinion rear shim (for pinion height adjustment)
    - Pinion height adjustment
23. Drive pinion spacer
21. Spline coupling
26. Oil seal
27. Drive pinion front bearing inner race
22. Drive pinion front shim (for preload adjustment)
    - Drive pinion preload adjustment
28. Drive pinion front bearing outer race
29. Drive pinion rear bearing outer race
30. Oil seal
31. Gear carrier

NOTE
(1) Reverse the disassembly procedures to reassemble.
(2) ◆◆: Refer to "Service Points of Disassembly".
(3) ◆◆: Refer to "Service Points of Reassembly".
(4) N: Non-reusable parts

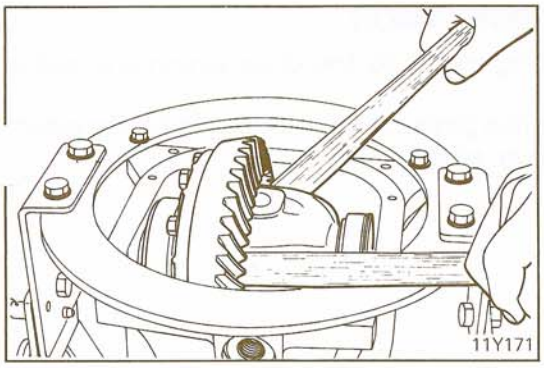

SERVICE POINTS OF DISASSEMBLY N03IGBA

6. REMOVAL OF DIFFERENTIAL CASE ASSEMBLY

Take out the differential case assembly with a hammer handle.

NOTE
Keep the right and left side bearings and side bearing adjusting spacers separate, so that they do not become mixed at the time of reassembly.

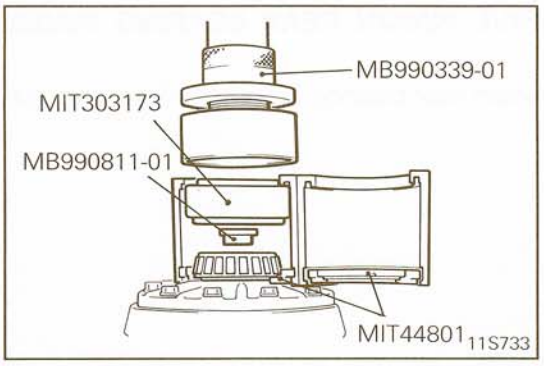

9. REMOVAL OF SIDE BEARING INNER RACE

Pull out the side bearing inner races by using the special tools.

NOTE
Attach the prongs of the special tool to the inner race of the side bearing through the openings in the differential case.

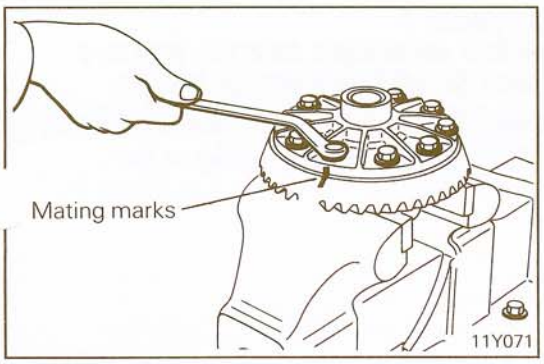

10. REMOVAL OF DRIVE GEAR

(1) Make the mating marks to the differential case and the drive gear.
(2) Loosen the drive gear attaching bolts in diagonal sequence to remove the drive gear.

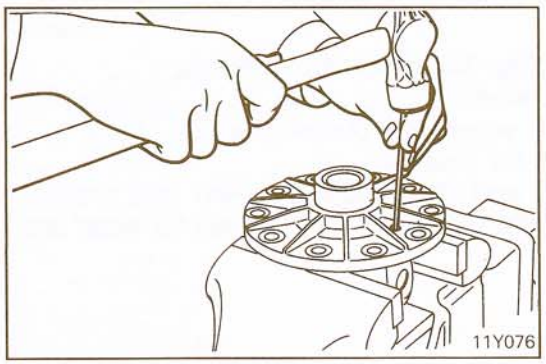

11. DRIVING OUT LOCK PIN

Drive out the lock pin with a punch.

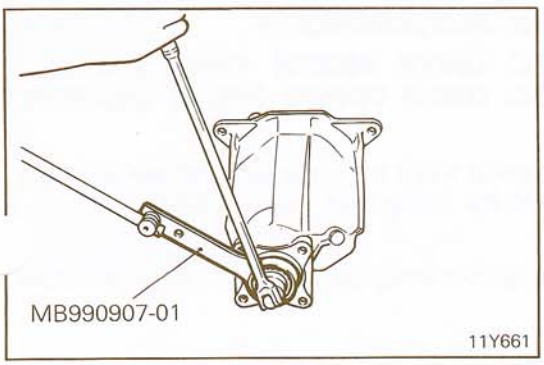

18. REMOVAL OF SPLINE COUPLING MOUNTING NUT

Use the special tools to hold the spline coupling and remove the spline coupling mounting nut.

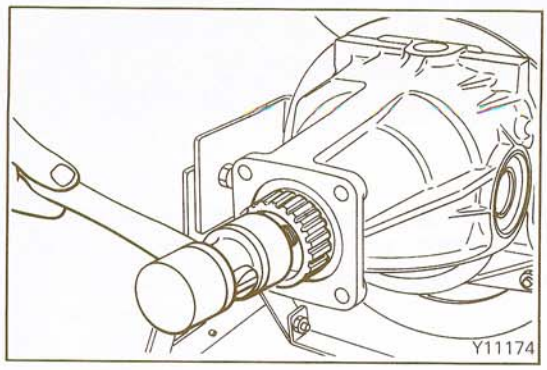

20. REMOVAL OF DRIVE PINION

(1) Make the mating marks to the drive pinion and spline coupling.
(2) Drive out the drive pinion together with the drive pinion spacer and drive pinion front shims.

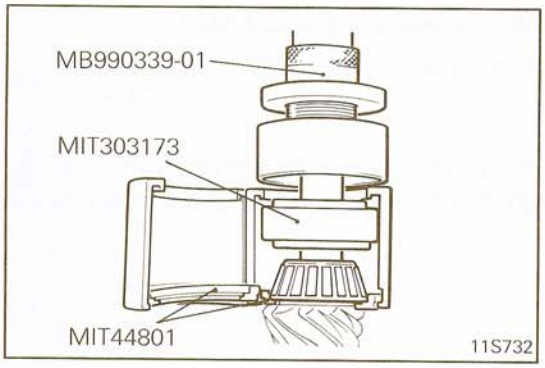

24. REMOVAL OF DRIVE PINION REAR BEARING INNER RACE

Pull out the drive pinion rear bearing inner race by using the special tools.

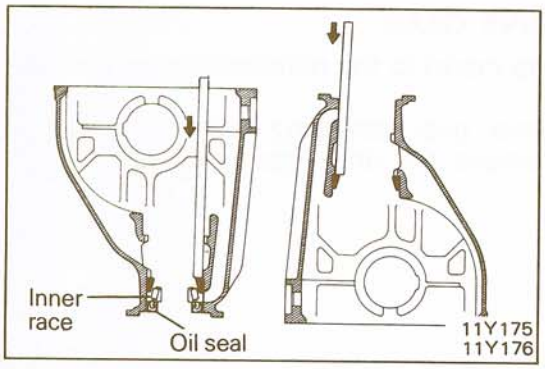

26. REMOVAL OF OIL SEAL /
28. DRIVE PINION FRONT BEARING OUTER RACE /
29. DRIVE PINION REAR BEARING OUTER RACE

Drive out the oil seal, drive pinion front and rear bearing outer races from the gear carrier by using a bar.

INSPECTION

N03IHBA

- Check spline coupling for wear and damage.
- Check oil seal for wear.
- Check bearings for wear and discolouration.
- Check gear carrier for cracks.
- Check drive pinion and drive gear for wear and cracks.
- Check side gear, pinion gear and pinion shaft for wear and seizure.

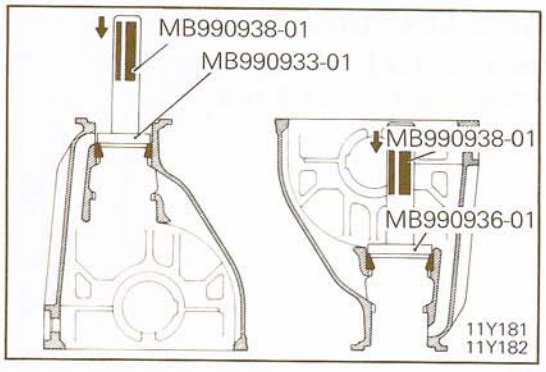

SERVICE POINTS OF REASSEMBLY

N03IJBB

29. INSTALLATION OF DRIVE PINION REAR BEARING OUTER RACE / 28. DRIVE PINION FRONT BEARING OUTER RACE

Press-fit the drive pinion front and rear bearing outer races into the gear carrier by using the special tools.

Caution
Perform press-fitting carefully so as not to tilt the outer race.

STB Revision

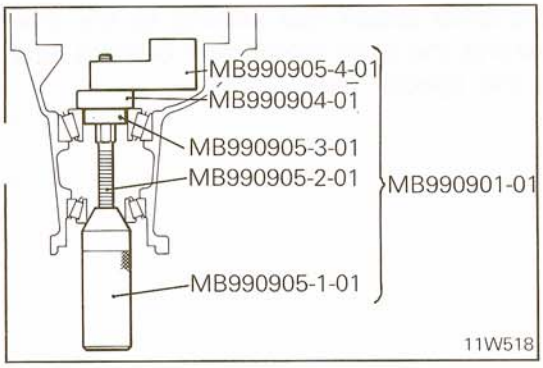

- **ADJUSTMENT OF PINION HEIGHT**

Adjust the drive pinion height by the following procedure:

(1) Install special tools and drive pinion front and rear bearing inner races to the gear carrier in the sequence shown in the illustration.

NOTE
Apply a thin coat of the specified grease to the mating face of the washer of the special tool.

Specified grease: Multipurpose grease SAE J310, NLGI No. 2

(2) Tighten the nut of the special tool until the standard value of drive pinion preload is obtained.

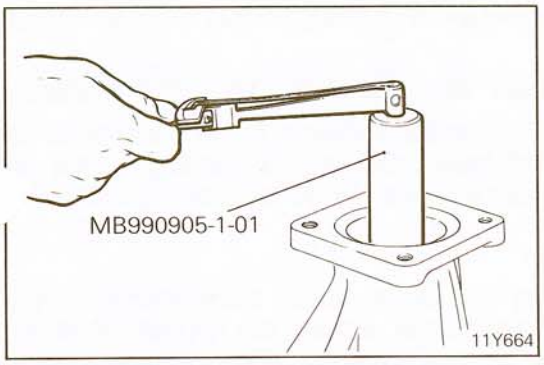

(3) Measure the drive pinion rotating torque (without the oil seal)

Standard value: 15 – 25 Ncm (1.3 – 2.2 in.lbs.)

NOTE
Gradually tighten the nut of the special tool while checking the drive pinion preload.

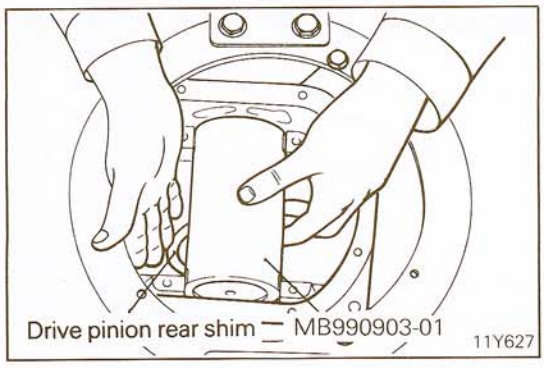

(4) Position the special tool in the side bearing seat of the gear carrier, and then select a drive pinion rear shim of a thickness which corresponds to the gap between the special tools.

NOTE
Be sure to clean the side bearing seat thoroughly. When positioning the special tool, be sure that the cut-out sections of the special tool are in the position shown in the illustration, and also confirm that the special tool is in close contact with the side bearing seat.
When selecting the drive pinion rear shims, keep the number of shims to a minimum.

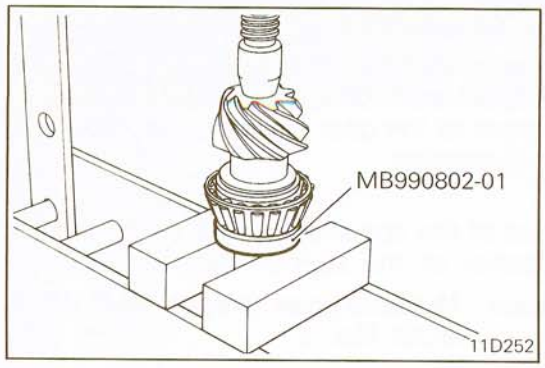

(5) Fit the selected drive pinion rear shim(s) to the drive pinion, and press-fit the drive pinion rear bearing inner race by using the special tool.

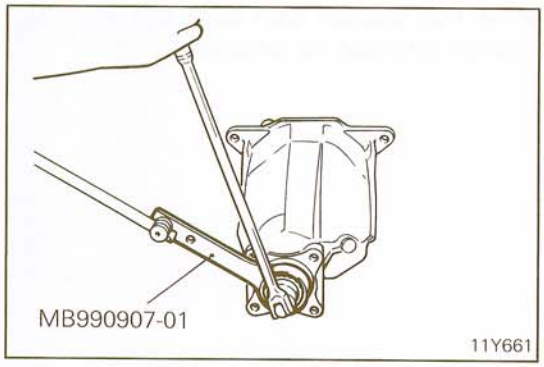

- **ADJUSTMENT OF DRIVE PINION PRELOAD**

Without Oil Seal

Adjust the drive pinion turning torque by using the following procedure:

(1) Fit the drive pinion front shim(s) between the drive pinion spacer and the drive pinion front bearing inner race.

(2) Tighten the spline coupling by using the special tools.

NOTE
Do not install oil seal.

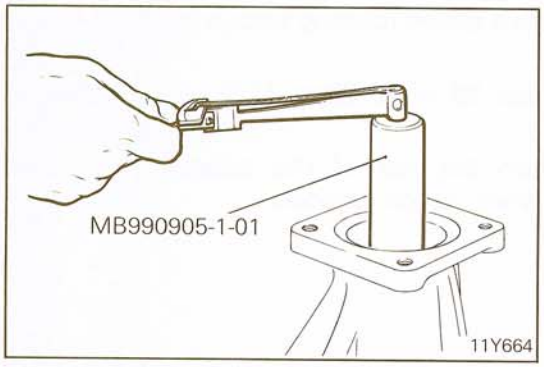

(3) Measure the drive pinion turning torque (without the oil seal).

Standard value: 15 – 25 Ncm (1.3 – 2.2 in.lbs.)

(4) If the drive pinion turning torque is not within the range of the standard value, adjust the turning torque by replacing the drive pinion front shim(s) or the drive pinion spacer.

NOTE
When selecting the drive pinion front shims, if the number of shims is large, reduce the number of shims to a minimum by selecting the drive pinion spacers.

(5) Remove the spline coupling and drive pinion once again.

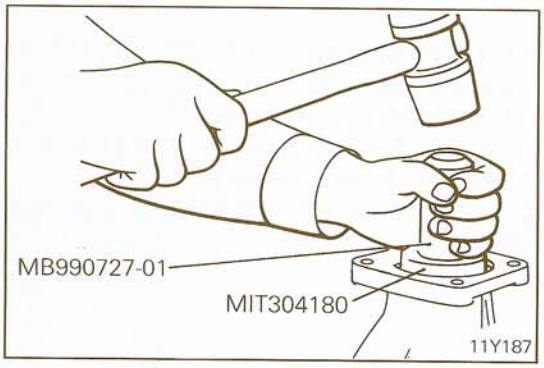

(6) Place the front bearing inner race in the gear carrier.

(7) Drive the oil seal into the gear carrier front lip by using the special tool.

(8) Apply specified grease to the oil seal lip.

Specified grease: Multipurpose grease SAE J310, NLGI No. 2

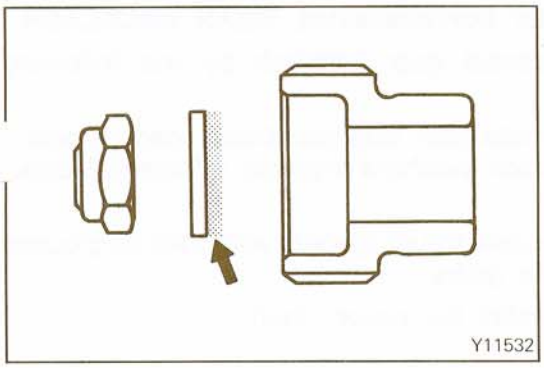

With Oil Seal

(1) Apply a thin coat of specified grease to the spline coupling contacting surface of the washer before installing drive pinion assembly.

Specified grease: Multipurpose grease SAE J310, NLGI No. 2

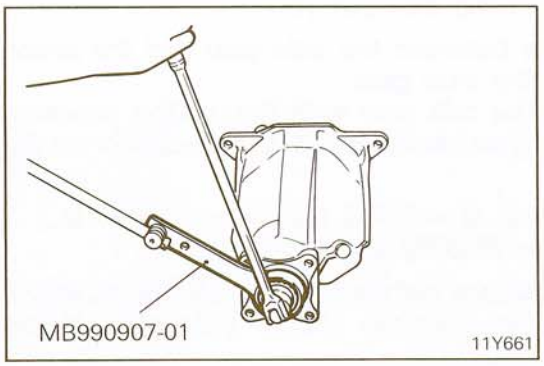

(2) Install the drive pinion assembly and spline coupling with mating marks properly aligned, and tighten the spline coupling self-locking nut to the specified torque by using the special tools.

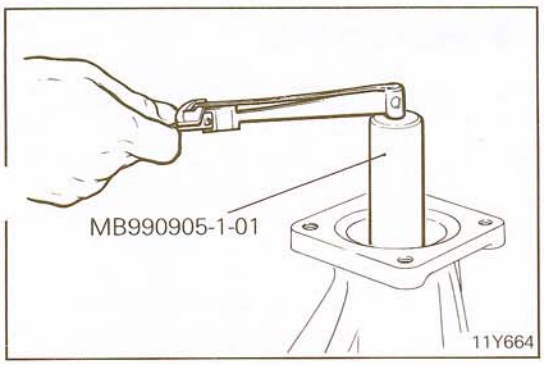

(3) Measure the drive pinion turning torque (with oil seal) by using the special tools to verify that the drive pinion turning torque complies with the standard value.

Standard value: 35 – 45 Ncm (3.0 – 3.9 in.lbs.)

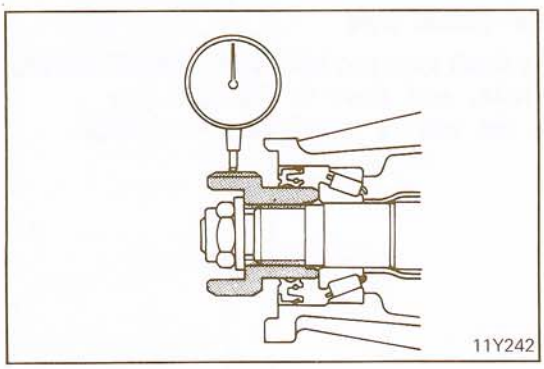

(4) Measure the spline coupling runout.

Standard value: 0.1 mm (0.004 in.)

(5) If the spline coupling runout exceeds the standard value, change the phase of the spline coupling and drive pinion after disassembling differential carrier and measure the runout once again.

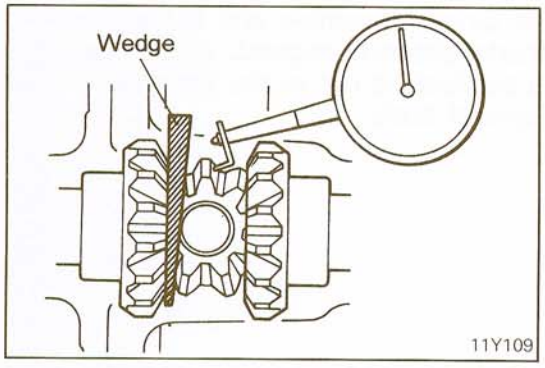

- **ADJUSTMENT OF DIFFERENTIAL GEAR BACKLASH**

Adjust the differential gear backlash by the following procedure:

(1) Assemble the side gear, side gear thrust spacers, pinion gears, and pinion washers into the differential case.

NOTE
Install the side gear thrust spacers with their oil grooves facing the side gears.

(2) Temporarily install the pinion shaft.

NOTE
Do not drive in the lock pin yet.

(3) Insert a wedge between the side gear and the pinion shaft to lock the side gear.
(4) While locking the side gear with the wedge, measure the differential gear backlash with a dial indicator on the pinion gear.

Standard value: 0 – 0.076 mm (0 – 0.0030 in.)
Limit: 0.2 mm (0.0079 in.)

(5) If the differential gear backlash exceeds the limit, adjust the backlash by installing thicker side gear thrust spacers.
(6) Measure the differential gear backlash once again, and confirm that it is within the limit.

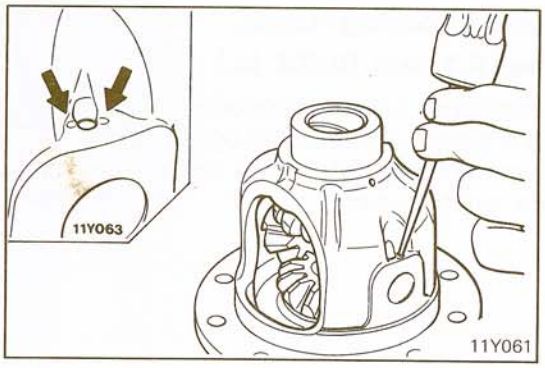

11. INSTALLATION OF LOCK PIN

(1) Align the pinion shaft lock pin hole with the differential case lock pin hole, and drive in the lock pin.
(2) Stake the lock pin with a punch at two points.

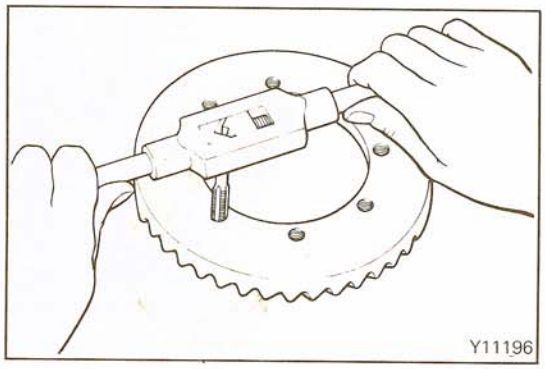

10. INSTALLATION OF DRIVE GEAR

(1) Clean the drive gear attaching bolts.
(2) Remove the adhesive adhered to the threaded holes of the drive gear by turning the tap (M10 x 1.25), and then clean the threaded holes by applying compressed air.

STB Revision

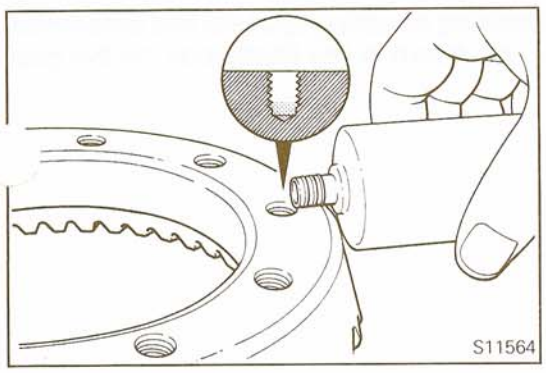

(3) Apply the specified adhesive to the threaded holes of the drive gear.

Specified adhesive: 3M Adhesive STUD LOCKING 4170 or equivalent

(4) Install the drive gear onto the differential case with the mating marks properly aligned. Be sure to tighten the bolts in a diagonal sequence.

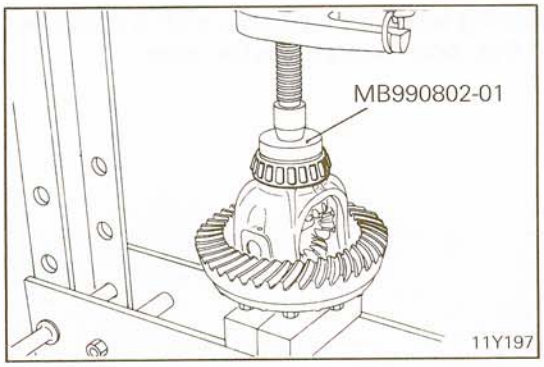

9. PRESS-FIT OF SIDE BEARING INNER RACE

Press-fit the side bearing inner races to the differential case by using the special tool.

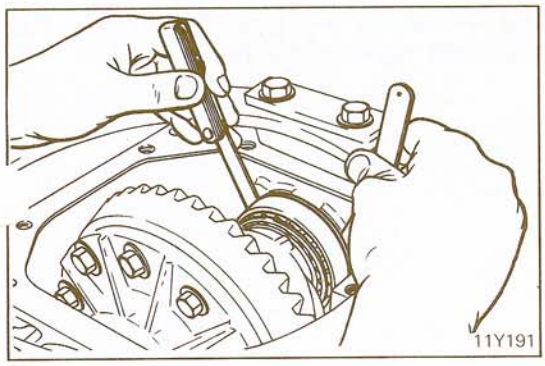

• ADJUSTMENT OF FINAL DRIVE GEAR BACKLASH

Adjust the final drive gear backlash by the following procedure:

(1) Install the side bearing adjusting spacers, which are thinner than those removed, to both the pinion gear and the drive gear sides of the differential case assembly, and then mount the differential case assembly into the gear carrier.

NOTE
Select side bearing adjusting spacers with the same thickness for both the drive pinion side and the drive gear side.

(2) Push the differential case assembly to one side, and measure the clearance between the gear carrier and the side bearing adjusting spacer with a feeler gauge.

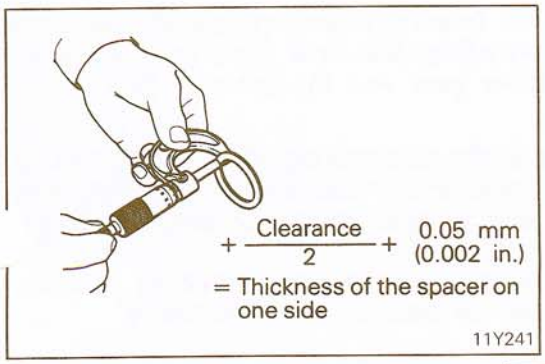

(3) Measure the thickness of the side bearing adjusting spacers on one side, select two pairs of spacers which correspond to that thickness plus one half of the clearance plug 0.05 mm (0.002 in.), and then install one pair each to the drive pinion side and the drive gear side.

NOTE
Be sure that there is no clearance between the gear carrier and the side bearing adjusting spacer.

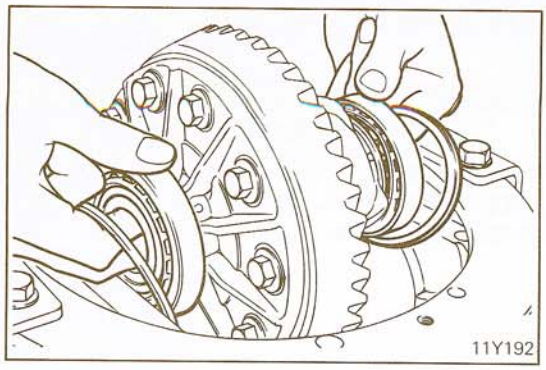

(4) Install the side bearing adjusting spacers and differential case assembly, as shown in the illustration, to the gear carrier.

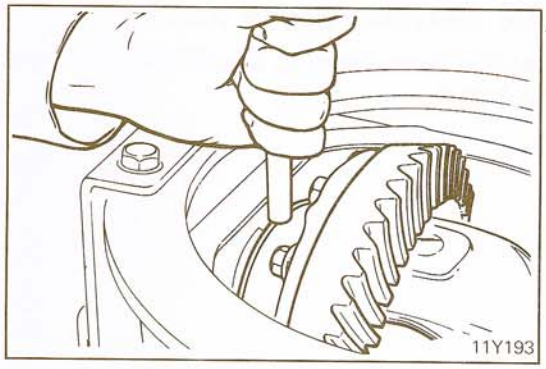

(5) Tap the side bearing adjusting spacers with a brass bar to fit them to the side bearing outer race.

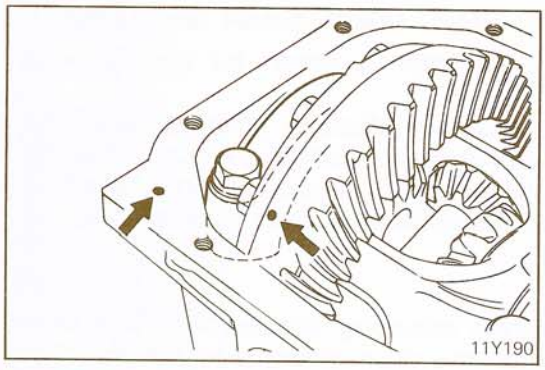

(6) Align the mating marks on the gear carrier and the bearing cap, and then tighten the bearing cap.

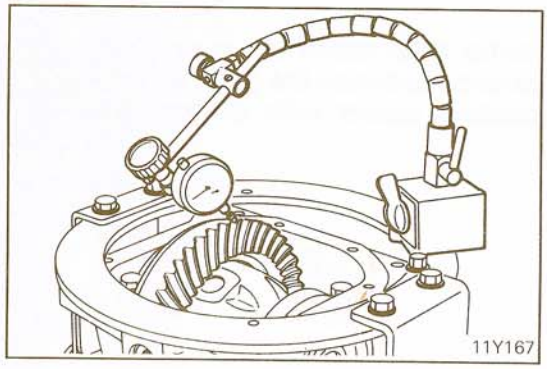

(7) Measure the final drive gear backlash.
Standard value: 0.11 – 0.16 mm (0.004 – 0.006 in.)

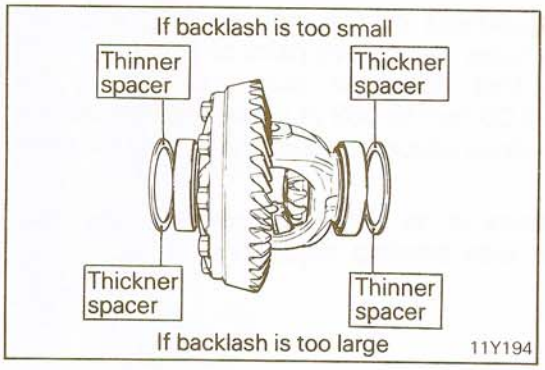

(8) Change the side bearing adjusting spacers as illustrated, and then adjust the final drive gear backlash between the drive gear and the drive pinion.

NOTE
Be sure to change the side bearing adjusting spacers on the drive pinion side and on the drive gear side so that the total thickness is equal to that obtained from the calculation in item (3).
When selecting the side bearing adjusting spacers, keep the number of spacers to a minimum.

STB Revision

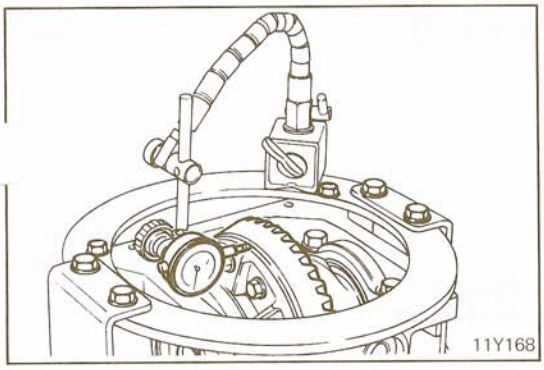

(9) Check the drive gear and drive pinion for tooth contact. If poor contact is evident, make adjustment. (Refer to P.3-37.)

(10) Re-measure the backlash to verify that the backlash complies with the standard value.

NOTE
There is a correlation between the backlash and tooth contact of the final drive gear. Coordinate their adjustment, while checking both, until a point of compromise is found. If correct adjustment cannot be made by only moving the drive gear sideways, adjustment of the drive pinion height is required.

(11) Measure the drive gear runout.

Limit: 0.05 mm (0.002 in.)

(12) If the drive gear runout exceeds the limit, reinstall by changing the phase of the drive gear and differential case, and remeasure.

4. INSTALLATION OF GASKET

Apply specified sealant to both sides of the gasket, and then install the cover.

Specified sealant: 3M ART Part No. 8663, 8661 or equivalent

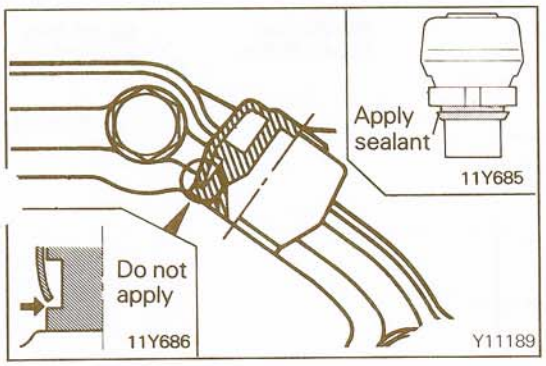

2. INSTALLATION OF VENT PLUG

When installing vent plug, apply specified sealant to the mating surfaces of the vent plug and the cover.

Specified sealant: 3M ART Part No. 8663 or equivalent

Caution
Do not apply sealant to the part shown in the illustration.

DIFFERENTIAL CARRIER (Limited Slip Differential)

N03IV- -

DISASSEMBLY AND REASSEMBLY

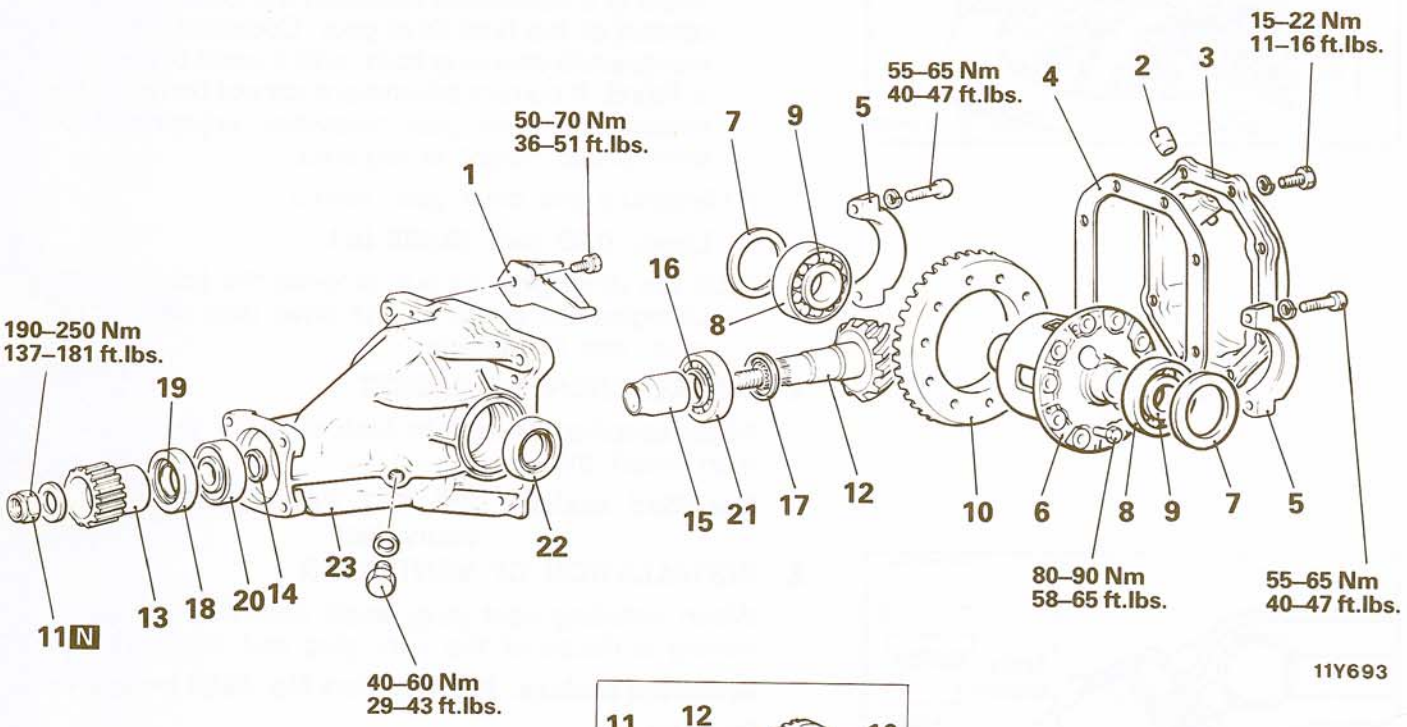

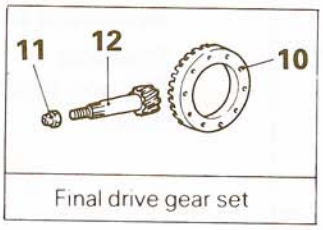

Final drive gear set

Disassembly steps

1. Rear supports
2. Vent plug
3. Cover
4. Gasket
5. Bearing cap
6. Differential case assembly
   Final drive gear backlash adjustment
7. Side bearing adjusting spacer
8. Side bearing outer race
9. Side bearing inner race
10. Drive gear
11. Spline coupling mounting nut (Self-locking nut)
12. Drive pinion
13. Spline coupling
14. Drive pinion front shim (for preload adjustment)
15. Drive pinion spacer
16. Drive pinion rear bearing inner race
17. Drive pinion rear shim (for pinion height adjustment)
    Pinion height adjustment
    Drive pinion preload adjustment
18. Oil seal
19. Drive pinion front bearing inner race
20. Drive pinion front bearing outer race
21. Drive pinion rear bearing outer race
22. Oil seal
23. Gear carrier

NOTE
(1) Reverse the disassembly procedures to reassemble.
(2) : Refer to "Service Points of Disassembly".
(3) : Refer to "Service Points of Reassembly".
(4) N: Non-reusable parts

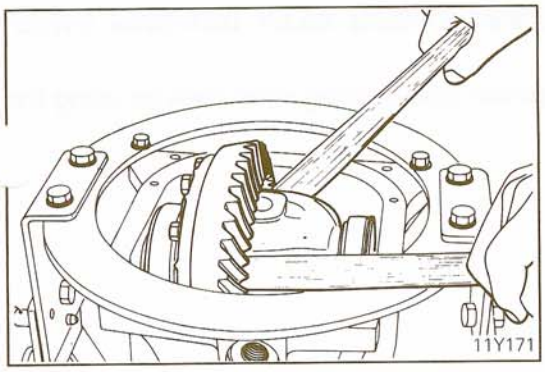

SERVICE POINTS OF DISASSEMBLY N03ILBA

6. REMOVAL OF DIFFERENTIAL CASE ASSEMBLY

Take out the differential case assembly with a hammer handle.

NOTE
Keep the right and left side bearings and side bearing adjusting spacers separate, so that they do not become mixed at the time of reassembly.

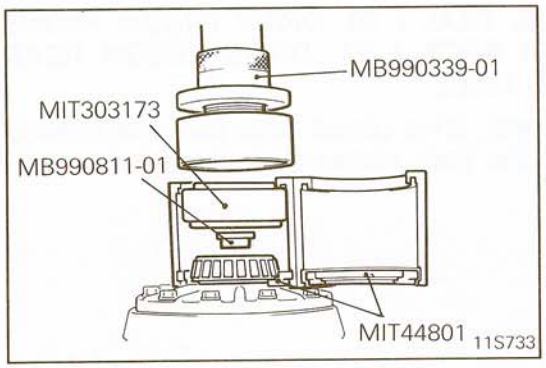

9. REMOVAL OF SIDE BEARING INNER RACE

Pull out the side bearing inner races by using the special tools.

NOTE
Attach the prongs of the special tool to the inner race of the side bearing through the openings in the differential case.

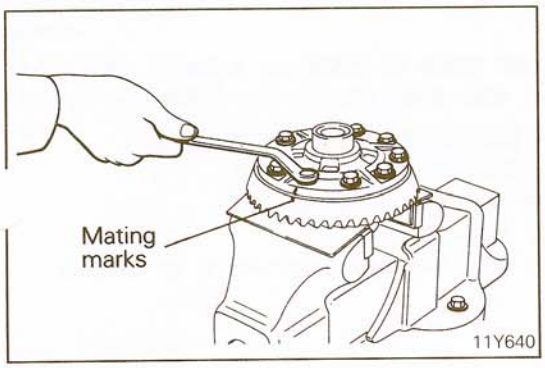

10. REMOVAL OF DRIVE GEAR

(1) Make the mating marks to the differential case and the drive gear.
(2) Loosen the drive gear attaching bolts in diagonal sequence to remove the drive gear.

NOTE
An anti-looseness agent has been used on the bolts. If they cannot be loosened, heat the area to approximately 150°C (302°F) with a propane torch, and then loosen them.

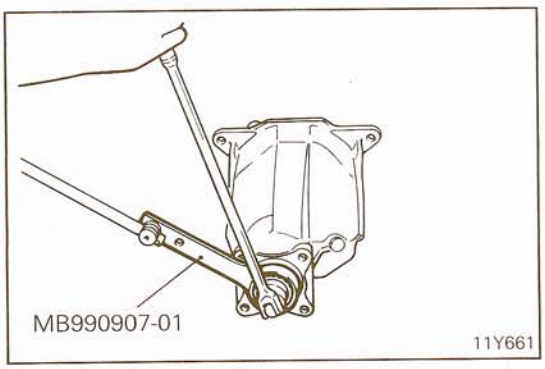

11. REMOVAL OF SPLINE COUPLING MOUNTING NUT

Use the special tools to hold the spline coupling and remove the spline coupling mounting nut.

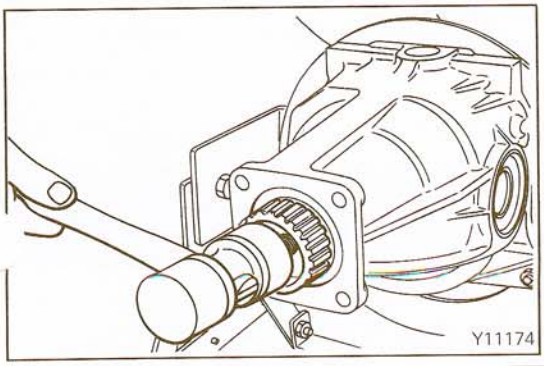

12. REMOVAL OF DRIVE PINION

(1) Make the mating marks to the drive pinion and spline coupling.
(2) Drive out the drive pinion together with the drive pinion spacer and drive pinion front shims.

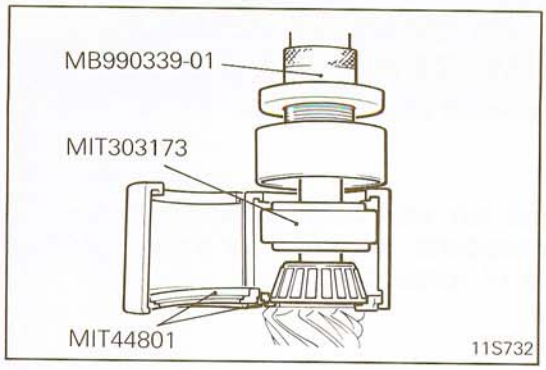

16. REMOVAL OF DRIVE PINION REAR BEARING INNER RACE

Pull out the drive pinion rear bearing inner race by using the special tools.

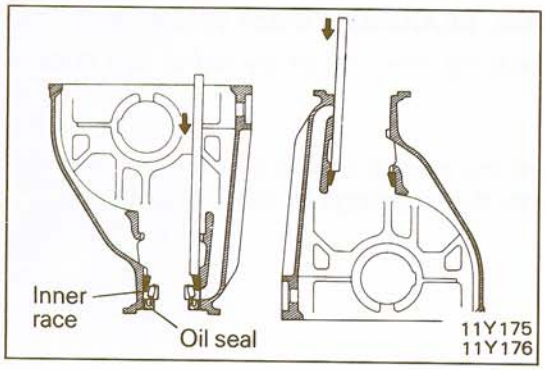

18. REMOVAL OF OIL SEAL / 20. DRIVE PINION FRONT BEARING OUTER RACE / 21. DRIVE PINION REAR BEARING OUTER RACE

Drive out the oil seal, drive pinion front and rear bearing outer races from the gear carrier by using a bar.

INSPECTION

N03IMBA

Wash the disassembled parts in cleaning solvent, dry them using compressed air, and then check the following areas:

- Check companion flange for wear or damage.
- Check oil seal for wear or deterioration.
- Check bearings for wear or discoloration.
- Check gear carrier for cracks.
- Check drive pinion and ring gear for wear or cracks.

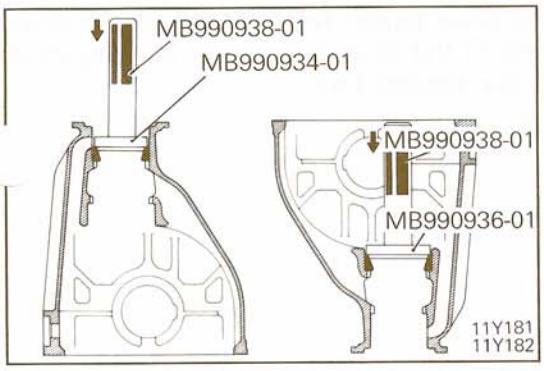

SERVICE POINTS OF REASSEMBLY

N03INBB

21. INSTALLATION OF DRIVE PINION REAR BEARING OUTER RACE / 20. DRIVE PINION FRONT BEARING OUTER RACE

Press-fit the drive pinion front and rear bearing outer races into the gear carrier by using the special tools.

Caution
Perform press-fitting carefully so as not to tilt the outer race.

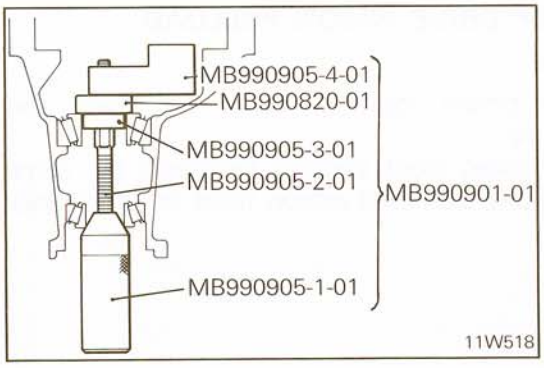

• ADJUSTMENT OF PINION HEIGHT

Adjust the drive pinion height by the following procedure:

(1) Install special tools and drive pinion front and rear bearing inner races to the gear carrier in the sequence shown in the illustration.

NOTE
Apply a thin coat of the specified grease to the mating face of the washer of the special tool.

Specified grease: Multipurpose grease SAE J310, NLGI No. 2

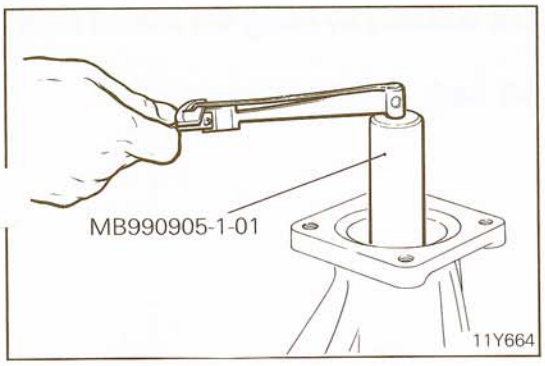

(2) Tighten the nut of the special tool until the standard value of drive pinion preload is obtained.

(3) Measure the drive pinion rotating torque (without the oil seal).

Standard value: 15 – 25 Ncm (1.3 – 2.2 in.lbs.)

NOTE
Gradually tighten the nut of the special tool while checking the drive pinion rotating torque.

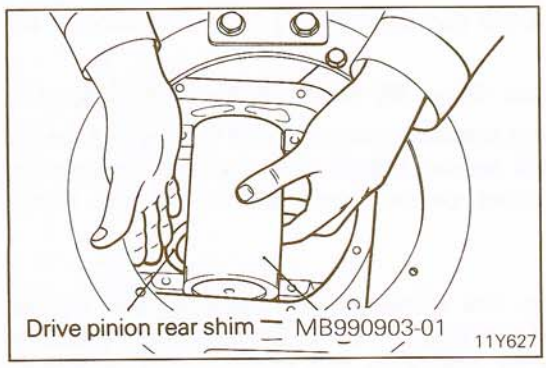

(4) Position the special tool in the side bearing seat of the gear carrier, and then select a drive pinion rear shim of a thickness which corresponds to the gap between the special tools.

NOTE
Be sure to clean the side bearing seat thoroughly. When positioning the special tool, be sure that the cut-out sections of the special tool are in the position shown in the illustration, and also confirm that the special tool is in close contact with the side bearing seat.
When selecting the drive pinion rear shims, keep the number of shims to a minimum.

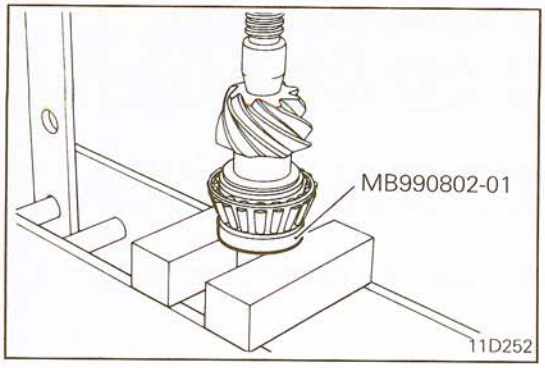

(5) Fit the selected drive pinion rear shim(s) to the drive pinion, and press-fit the drive pinion rear bearing inner race by using the special tool.

- **ADJUSTMENT OF DRIVE PINION PRELOAD**

Without Oil Seal

Adjust the drive pinion rotating torque by using the following procedure:

(1) Fit the drive pinion front shim(s) between the drive pinion spacer and the drive pinion front bearing inner race.

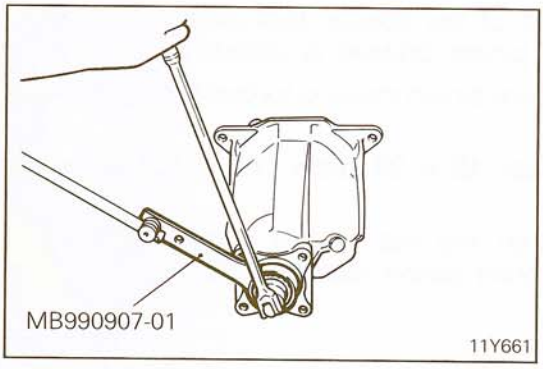

(2) Tighten the spline coupling by using the special tools.

NOTE
Do not install oil seal.

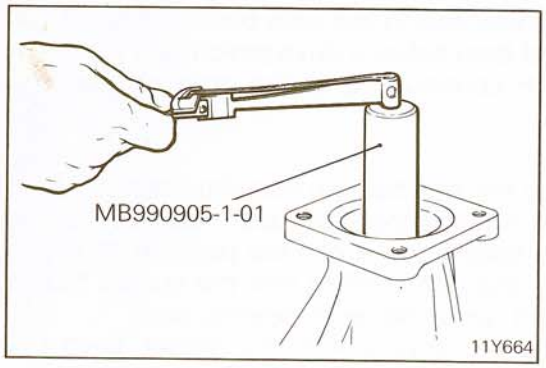

(3) Measure the drive pinion rotating torque (without oil seal).

Standard value: 15 – 25 Ncm (1.3 – 2.2 in.lbs.)

(4) If the drive pinion rotating torque is not within the range of the standard value, adjust the turning torque by replacing the drive pinion front shim(s) or the drive pinion spacer.

NOTE
When selecting the drive pinion front shims, if the number of shims is large, reduce the number of shims to a minimum by selecting the drive pinion spacers.

(5) Remove the spline coupling and drive pinion once again.

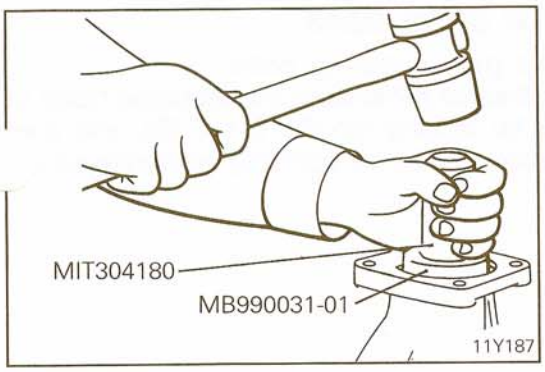

(6) Place the front bearing inner race in the gear carrier.
(7) Drive the oil seal into the gear carrier front lip by using the special tool.
(8) Apply specified grease to the oil seal lip.

Specified grease: Multipurpose grease SAE J310, NLGI No. 2

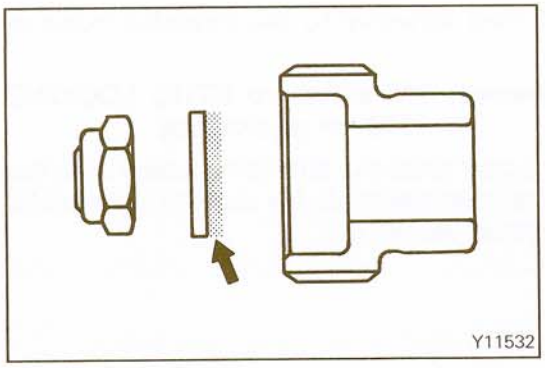

With Oil Seal

(1) Apply a thin coat of specified grease to the spline coupling contacting surface of the washer before installing drive pinion assembly.

Specified grease: Multipurpose grease SAE J310, NLGI No. 2

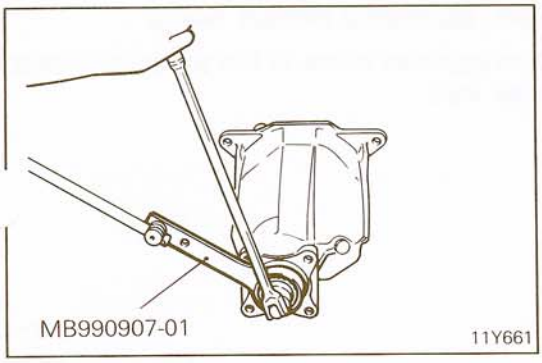

(2) Install the drive pinion assembly and spline coupling with mating marks properly aligned, and tighten the spline coupling mounting nut by using the special tools.

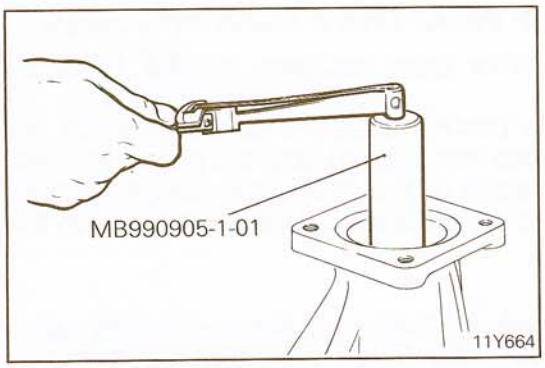

(3) Measure the drive pinion rotating torque (with oil seal) to verify that the drive pinion rotating torque complies with the standard value.

Standard value: 40 – 50 Ncm (3.5 – 4.3 in.lbs.)

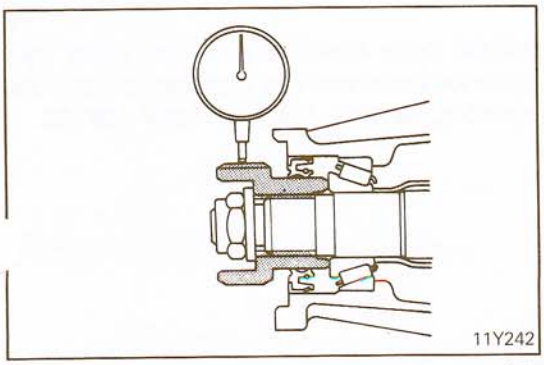

(4) Measure the spline coupling runout.

Standard value: 0.1 mm (0.004 in.)

If the spline coupling runout exceeds the standard value, change the phase of the spline coupling and drive pinion after disassembling the differential carrier and measure the runout once again.

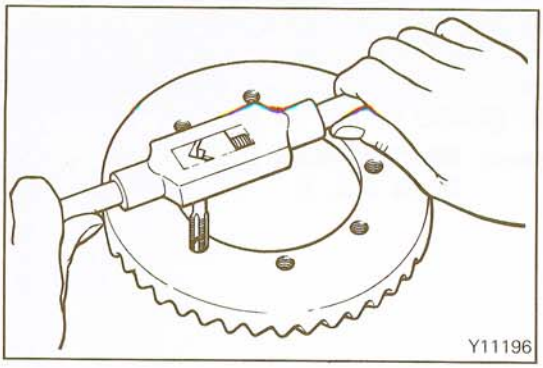

10. INSTALLATION OF DRIVE GEAR

(1) Clean the drive gear attaching bolts.
(2) Remove the adhesive adhered to the threaded holes of the drive gear by turning tap (M10 x 1.25), and then clean the threaded holes by applying compressed a

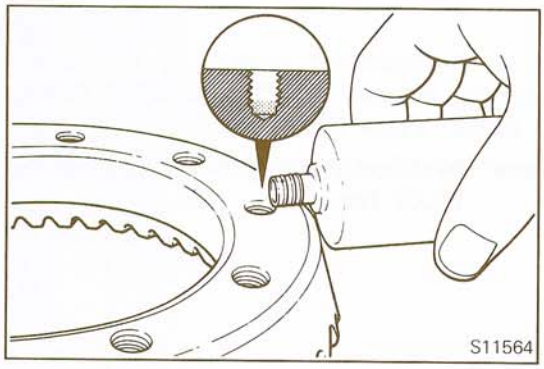

(3) Apply the specified adhesive to the threaded holes of the drive gear.

Specified adhesive: 3M adhesive STUD LOCKING 4170 or equivalent

(4) Install the drive gear onto the differential case with the mating marks properly aligned. Be sure to tighten the bolts in a diagonal sequence.

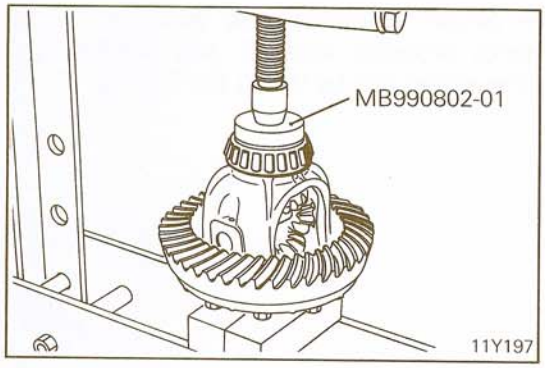

9. PRESS-FIT OF SIDE BEARING INNER RACE

Press-fit the side bearing inner races to the differential case by using the special tool.

• ADJUSTMENT OF FINAL DRIVE GEAR BACKLASH

Adjust the final drive gear backlash by the following procedure:

(1) Install the side bearing adjusting spacers, which are thinner than those removed, to both the pinion gear and the drive gear sides of the differential case assembly, and then mount the differential case assembly into the gear carrier.

NOTE
Select side bearing adjusting spacers with the same thickness for both the drive pinion side and the drive gear side.

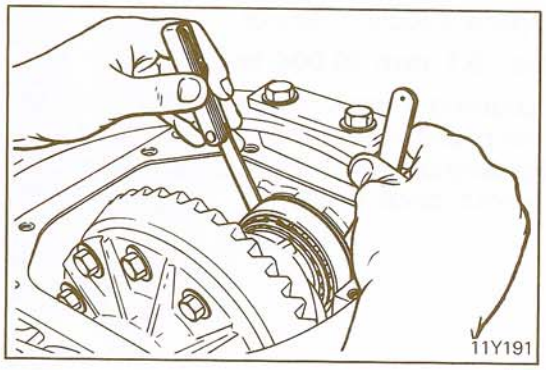

(2) Push the differential case assembly to one side, and measure the clearance between the gear carrier and the side bearing adjusting spacer with a feeler gauge.

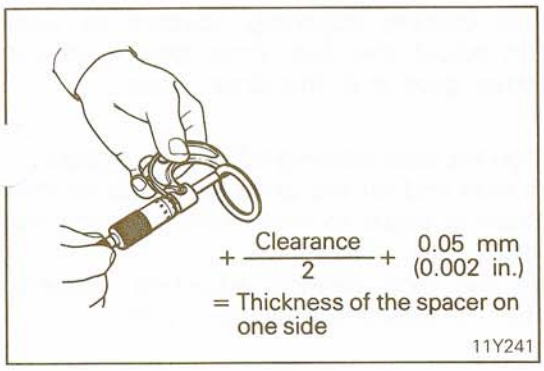

(3) Measure the thickness of the side bearing adjusting spacers on one side, select two pairs of spacers which correspond to that thickness plus one half of the clearance plus 0.05 mm (0.002 in.), and then install one pair each to the drive pinion side and the drive gear side.

NOTE
Be sure that there is no clearance between the gear carrier and the side bearing adjusting spacer.

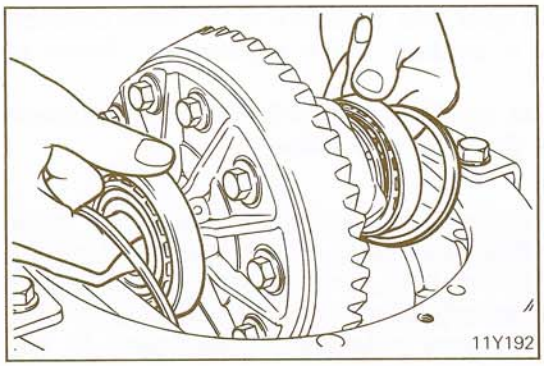

(4) Install the side bearing adjusting spacers and differential case assembly, as shown in the illustration, to the gear carrier.

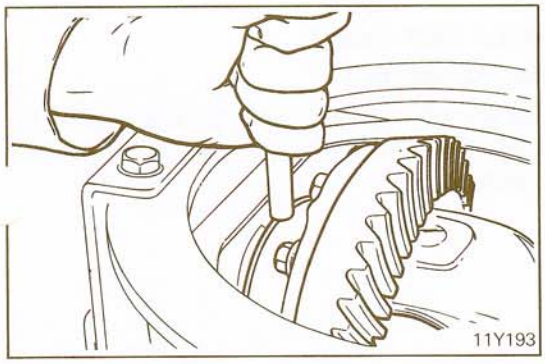

(5) Tap the side bearing adjusting spacers with a brass bar to fit them to the side bearing outer race.

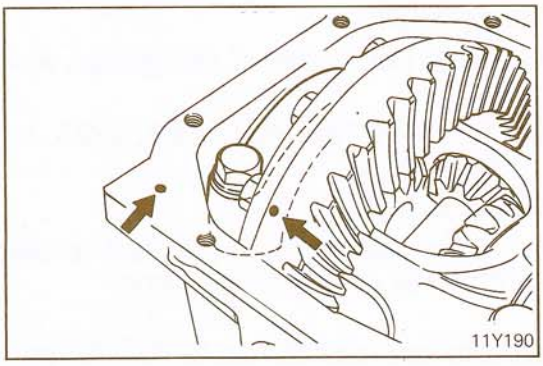

(6) Align the mating marks on the gear carrier and the bearing cap, and then tighten the bearing cap.

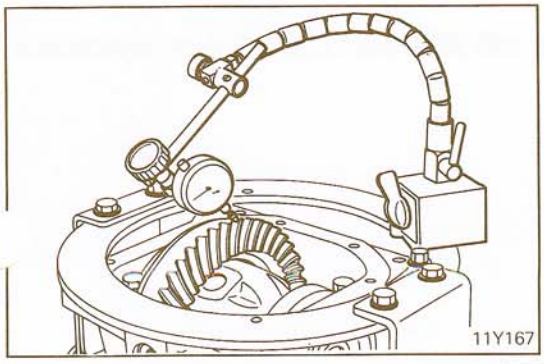

(7) Measure the final drive gear backlash.
Standard value: 0.13 – 0.18 mm (0.005 – 0.007 in.)

STB Revision

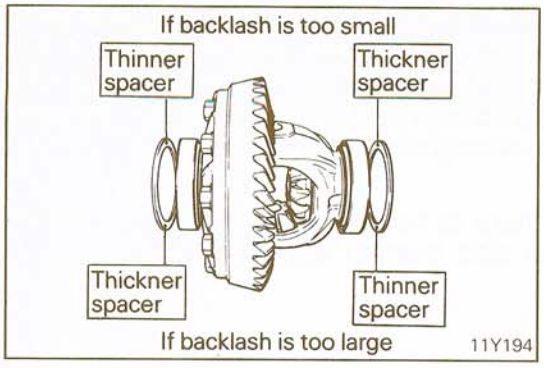

(8) Change the side bearing adjusting spacers as illustrated, and then adjust the final drive gear backlash between the drive gear and the drive pinion.

NOTE
Be sure to change the side bearing adjusting spacers the drive pinion side and on the drive gear side so that the total thickness is equal to that obtained from the calculation in item (3).
When selecting the side bearing adjusting spacers, keep the number of spacers to a minimum.

(9) Check the drive gear and drive pinion for tooth contact. If poor contact is evident, make adjustment. (Refer to P.3-37.)

(10) Re-measure the backlash to verify that the backlash complies with the standard value.

NOTE
There is a correlation between the backlash and tooth contact of the final drive gear. Coordinate their adjustment, while checking both, until a point of compromise is found. If correct adjustment cannot be made by only moving the drive gear sideways, adjustment of the drive pinion height is required.

(11) Measure the drive gear runout.

Limit: 0.05 mm (0.002 in.)

If the drive gear runout exceeds the limit, reinstall by changing the phase of the drive gear and differential case, and re-measure.

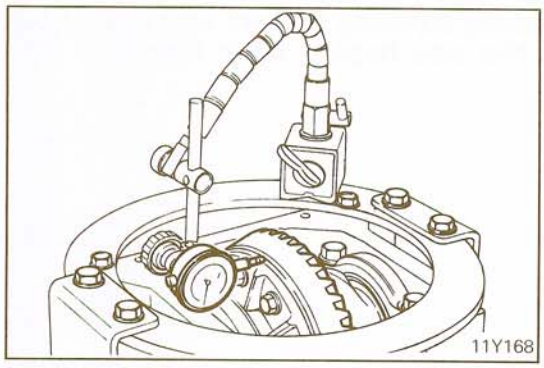

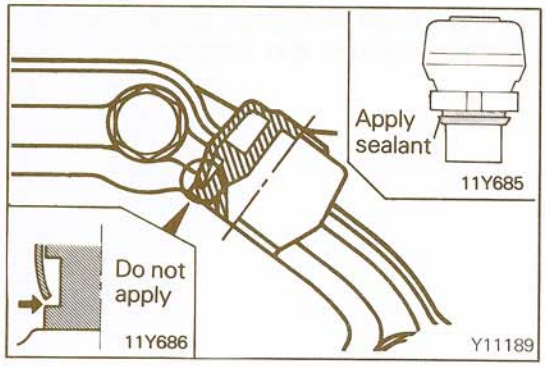

4. INSTALLATION OF GASKET

Apply specified sealant to both sides of the gasket, and then install the cover.

Specified sealant: 3M ART Part No. 8663, 8661 or equivalent

2. INSTALLATION OF VENT PLUG

When installing vent plug, apply specified sealant to the mating surfaces of the vent plug and the cover.

Caution
Do not apply sealant to the part shown in the illustration.

Specified sealant: 3M ART Part No. 8663 or equivalent

DIFFERENTIAL CARRIER (Limited Slip Differential)

N03IW- -

OVERHAUL

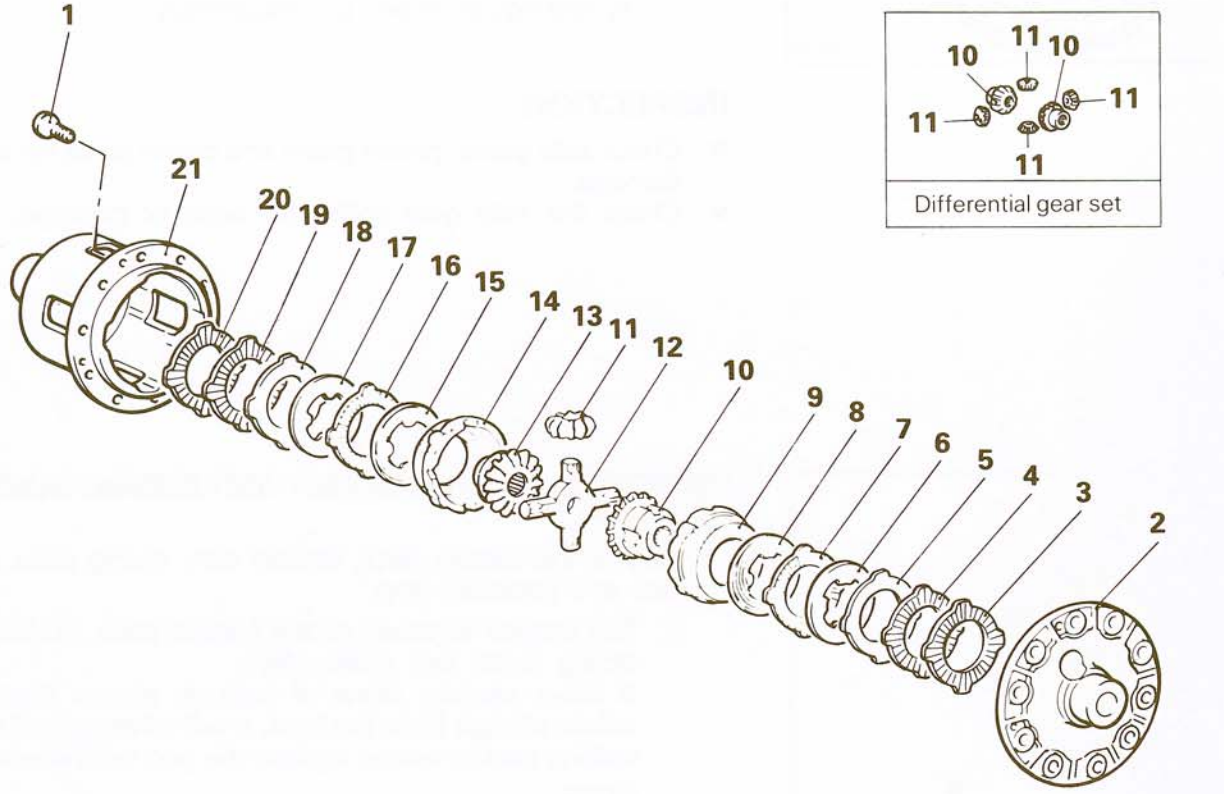

Disassembly steps

- ◆◆ Adjustment of clutch plate preload
- ◆◆ 1. Screw
- 2. Differential case (A)
- 3. Spring plate
- 4. Spring disc
- 5. Friction plate
- 6. Friction disc
- 7. Friction plate
- 8. Friction disc
- 9. Pressure ring
- 10. Side gear
- 11. Differential pinion gear
- 12. Differential pinion shaft
- 13. Side gear
- 14. Pressure ring
- 15. Friction disc
- 16. Friction plate
- 17. Friction disc
- 18. Friction plate
- 19. Spring disc
- 20. Spring plate
- ◆◆ Adjustment of clutch plate friction force
- 21. Differential case (B)

NOTE
(1) Reverse the disassembly procedures to reassemble.
(2) ◆◆: Refer to "Service Points of Disassembly".
(3) ◆◆: Refer to "Service Points of Reassembly".

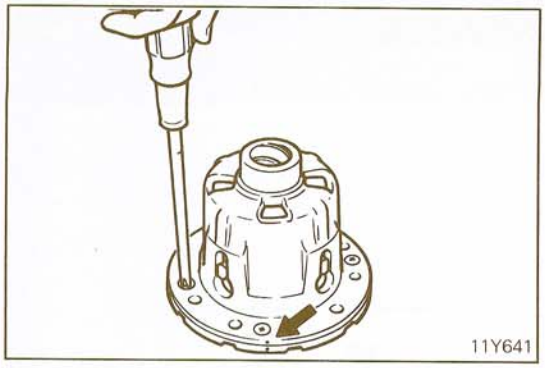

SERVICE POINTS OF DISASSEMBLY N03IPBA

1. REMOVAL OF SCREW

(1) Loosen screws of the differential cases (A) and (B) uniformly a little at a time.
(2) Separate differential case (A) from differential case (B).
(3) Remove the components from differential case (B).

NOTE
Keep the right and left parts separate in order to be able to distinguish them for reassembly.

INSPECTION N03IQBA

- Check side gears, pinion gears and pinion shaft for wear or damage.
- Check the side gear spline for wear or damage.

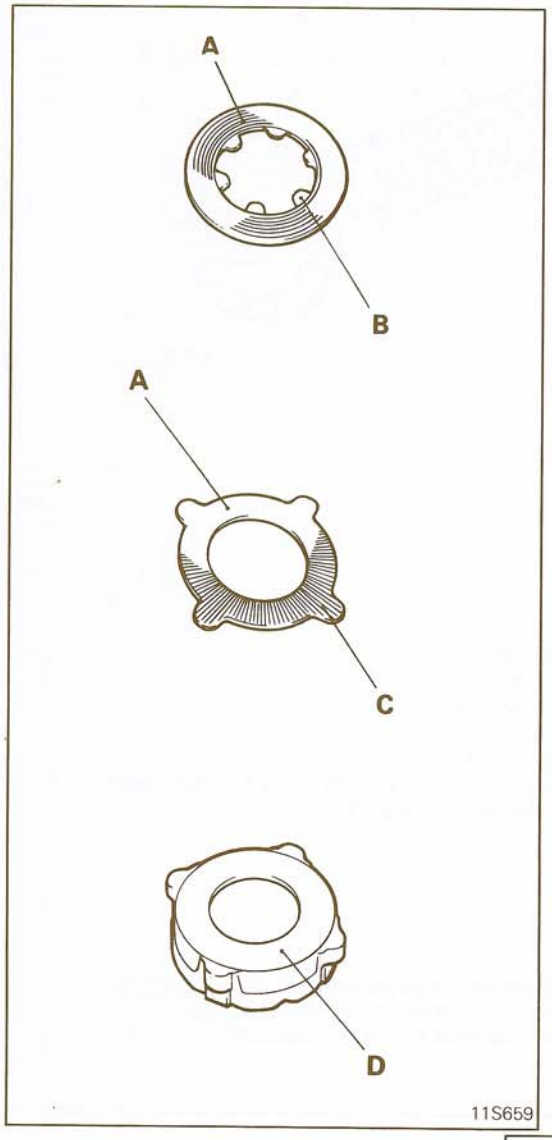

INSPECTION OF THE CONTACT AND SLIDING SURFACES OF PARTS

(1) Inspect the friction plate, friction disc, spring plate, spring disc and pressure ring.

A. The friction surfaces of the friction plate, friction disc spring plate, and spring disc.
If there are any signs of seizure, severe friction, or colour change from the heat, it will adversely affect the locking performance; replace the part with a new one.

NOTE
The strong contact on the inner circumference of the friction surfaces is because of the spring plate and the spring disc; this wear is not abnormal.

B. The six projections on the inner circumference of the friction disc.
If there are nicks and dents, it will cause abnormalities in the clutch pressure.
Repair the parts by using an oil stone; if the parts cannot be repaired, replace them.

C. The four projections on the outer circumference of the friction disc.
If there are nicks and dents, it will cause abnormalities in the clutch pressure.
Repair the parts by using an oil stone; if the parts cannot be repaired, replace them.

D. The friction surface of the friction disc of the pressure ring.
If there are nicks or scratches, repair the part by first grinding with an oil stone and then polishing with rubbing compound on a surface plate.

NOTE
The strong contact on the inner circumference of the friction surface is because of the spring plate and the spring disc; this wear is not abnormal.

STB Revision

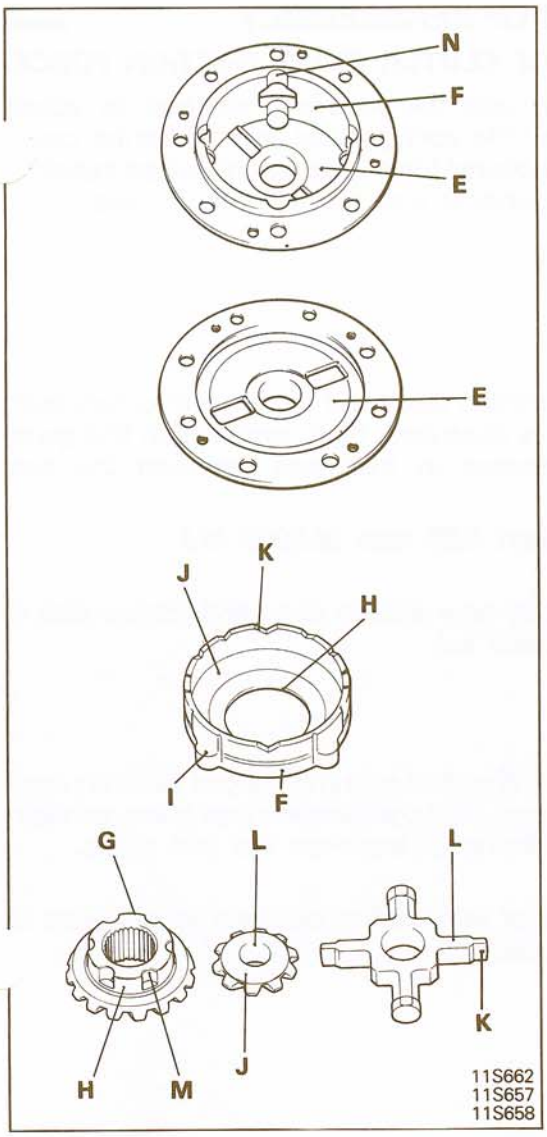

(2) Inspect the contact and sliding surfaces listed below, and repair any nicks and burrs by using an oil stone.

E. The spring contacting surface of the differential case.
F. The contact surfaces of the outer circumference of the pressure ring and the inner circumference of the differential case.
G. The sliding surface of the thrust washer.
H. The sliding surfaces of the hole in the pressure ring and the outer circumference of the side gear.
I. The projection on the outer circumference of the pressure ring.
J. The spherical surface of the differential pinion gear and the inner diameter of the pressure ring.
K. The V-shaped groove in the pressure ring, and the V-shaped part in the pinion shaft.
L. The outer diameter of the pinion shaft and the hole in the differential pinion gear.
M. The outer circumference groove of the side gear.
N. The inner circumference groove of the differential case.

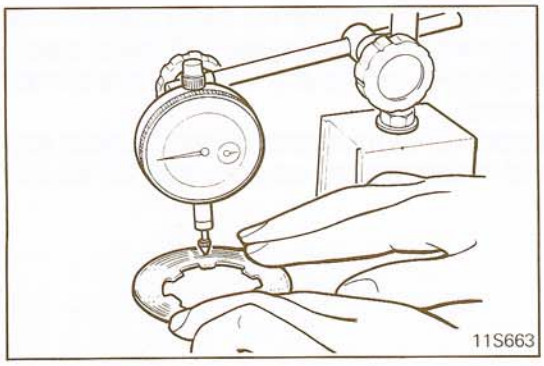

INSPECTION FOR WARPING OF THE FRICTION PLATE AND FRICTION DISC

Using a dial indicator, measure the amount of warping (the flatness) of the friction plate and the friction disc on a surface plate by turning the friction plate or disc.

Limit: 0.08 mm (0.0031 in.)

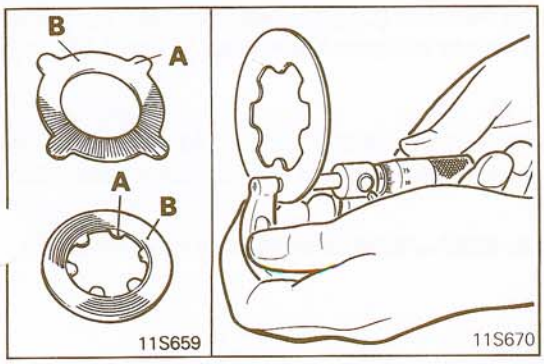

INSPECTION FOR WEAR OF THE FRICTION PLATE AND FRICTION DISC

(1) In order to measure the wear, measure the thickness of the friction surfaces and projections of the friction disc and plate, and then find the difference.

Limit: 0.1 mm (0.0039 in.)

NOTE
Make the measurement at several different points.

(2) If the parts are worn beyond the allowable limit, replace them with new parts.

SERVICE POINTS OF REASSEMBLY

N03IRBB

• ADJUSTMENT OF CLUTCH PLATE FRICTION FORCE

Before assembly, use the following method to adjust clearance between the spring plates and differential case (for clutch plate frictional force adjustment) when installing the internal components into the differential case.

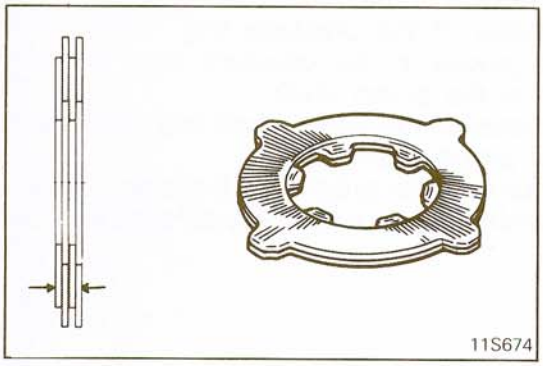

(1) Stack up the friction discs and friction plates two each on each side as illustrated. Find combination that gives standard difference in thickness between the two sides.

Standard value: 0.05 mm (0.0020 in.)

NOTE
The thickness of new friction plate and friction disc is 1.70 mm (0.0669 in.).

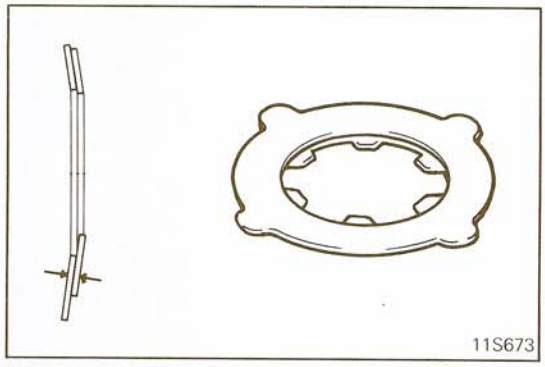

(2) Stack up spring disc and spring plate one each on each side as illustrated. Find combination that gives smallest difference in thickness between the two sides.

NOTE
The thickness of new spring disc and spring plate is 1.70 mm (0.0669 in.).

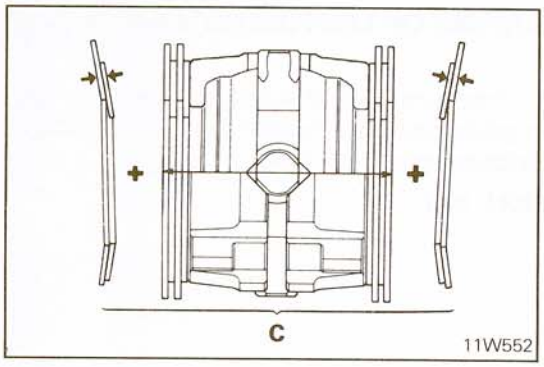

(3) Assemble the pressure ring internal parts (differential pinion shaft, differential pinion gear and side gear), friction discs and friction plates and measure the overall width as illustrated.
(4) Determine the sum (C) of thickness of spring discs and spring plates and measurement taken in step (3) above.

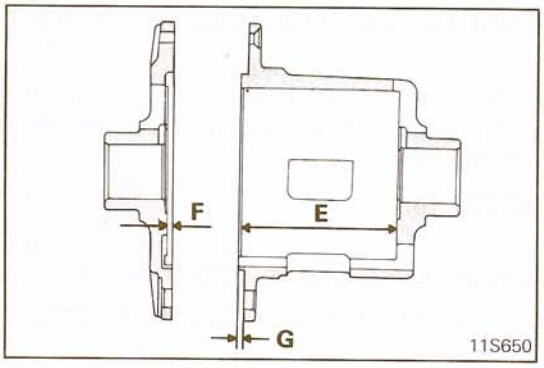

(5) Determine the dimension (D) between contact surfaces of spring plates when differential cases (A) and (B) are combined.
D = E + F – G
(6) Adjust the spring disc thickness so that the spring plate to differential case clearance (D – E) becomes the standard value.

Standard value: 0.06 – 0.20 mm (0.0024 – 0.0079 in.)

STB Revision

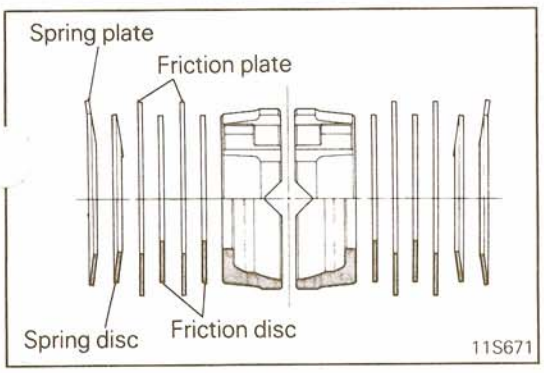

(7) Place parts in the differential case (B) in the illustrated direction.

NOTE

(a) Before assembly, apply the specified gear oil to each component being especially careful to coat all contact surfaces and sliding surfaces.

Specified gear oil:
MITSUBISHI Genuine gear oil Part No. 8149630EX or equivalent

(b) Be careful not to insert the friction plates and friction discs in the incorrect order and to install the spring plates and spring discs in incorrect direction.

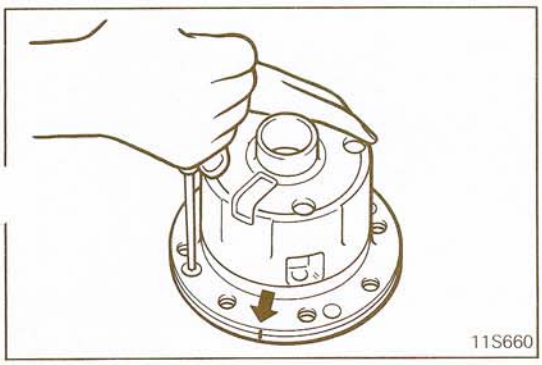

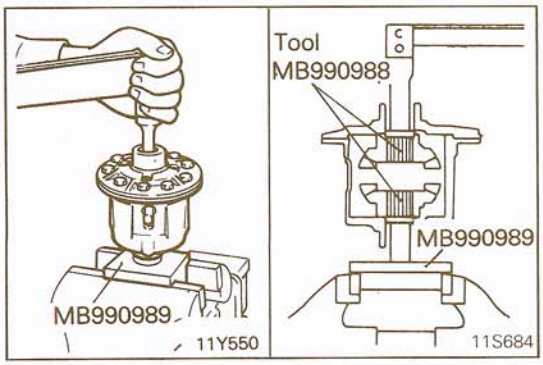

- **ADJUSTMENT OF CLUTCH PLATE PRELOAD**

(1) Align mating marks (same numeral on each case) on differential case (A) and differential case (B).

(2) Tighten screws with a screwdriver in several steps until the cases are brought into close contact.

NOTE

If end faces of cases (A) and (B) do not come into close contact when screws are tightened, incorrect engagement of preload spring and outer clutch plate or spring plate with groove is suspected. Assemble again.

(3) After assembly, in order to check the frictional force of the clutch plate, use the special tools to measure the starting torque.

NOTE

Slightly rotate the unit before measuring the torque.

Standard value:
When a new clutch plate is used
50 – 80 Nm (36 – 58 ft.lbs.)
When an old clutch plate is used
35 – 80 Nm (25 – 58 ft.lbs.)

BRAKES
SERVICE AND PARKING

CONTENTS

BRAKE BOOSTER **43**

BRAKE LINE **45**

BRAKE MASTER CYLINDER **38**

BRAKE PEDAL **35**

FRONT DISC BRAKES **47**

GENERAL INFORMATION **2**

PARKING BRAKE CABLE **68**

PARKING BRAKE LEVER **66**

REAR BRAKE LOCK-UP CONTROL SYSTEM **58**

REAR DISC BRAKES **52**

SERVICE ADJUSTMENT PROCEDURES **24**

- Bleeding 29
- Brake Booster Operating Tests 25
- Brake Fluid Level Sensor Check 25
- Brake Pedal Inspection and Adjustment 24
- Checking Parking Brake Lever Stroke 34
- Checking Parking Brake Switch 34
- G-sensor Installation Levelness Check 29
- Modulator Operating Test 28
- Pad Assembly Inspection and Replacement 29
- Proportioning Valve Function Test 27
- Rear Brake Lock-up Control System Function Check 27

SPECIAL TOOLS **18**

SPECIFICATIONS **14**

- General Specifications 14
- Lubricants 17
- Sealants and Adhesives 17
- Service Specifications 15
- Torque Specifications 16

TROUBLESHOOTING **19**

- Brake Drag
- Groaning, Clicking or Rattling Noise When Brakes Are Not Applied
- Increased Pedal Stroke (Reduced Pedal to Floorboard Clearance)
- Insufficient Braking Power
- Insufficient Parking Brake Function
- Rear Brake Lock-up Control System
- Scraping or Grinding Noise When Brakes Are Applied
- Squealing Noise When Brakes Are Not Applied
- Squealing, Groaning or Chattering Noise When Brakes Are Applied
- Vehicle Pulls to One Side When Brakes Are Applied

CAUTION
When servicing brake assemblies or components, do not create dust by sanding, grinding or by cleaning brake parts with a dry brush or with compressed air. A WATER DAMPENED CLOTH SHOULD BE USED. Many brake components contain asbestos fibers which can become air-borne if dust is created during service operations. Breathing dust which contains asbestos fibers can cause serious bodily harm.

GENERAL INFORMATION

N05BA--

The service brakes on all four wheels (front and rear) are disc brakes (ventilated type) that feature outstanding braking effect and heat dissipation.
A brake booster is also added to reduce the force required for braking.
A proportioning valve is provided for improved stability during braking.

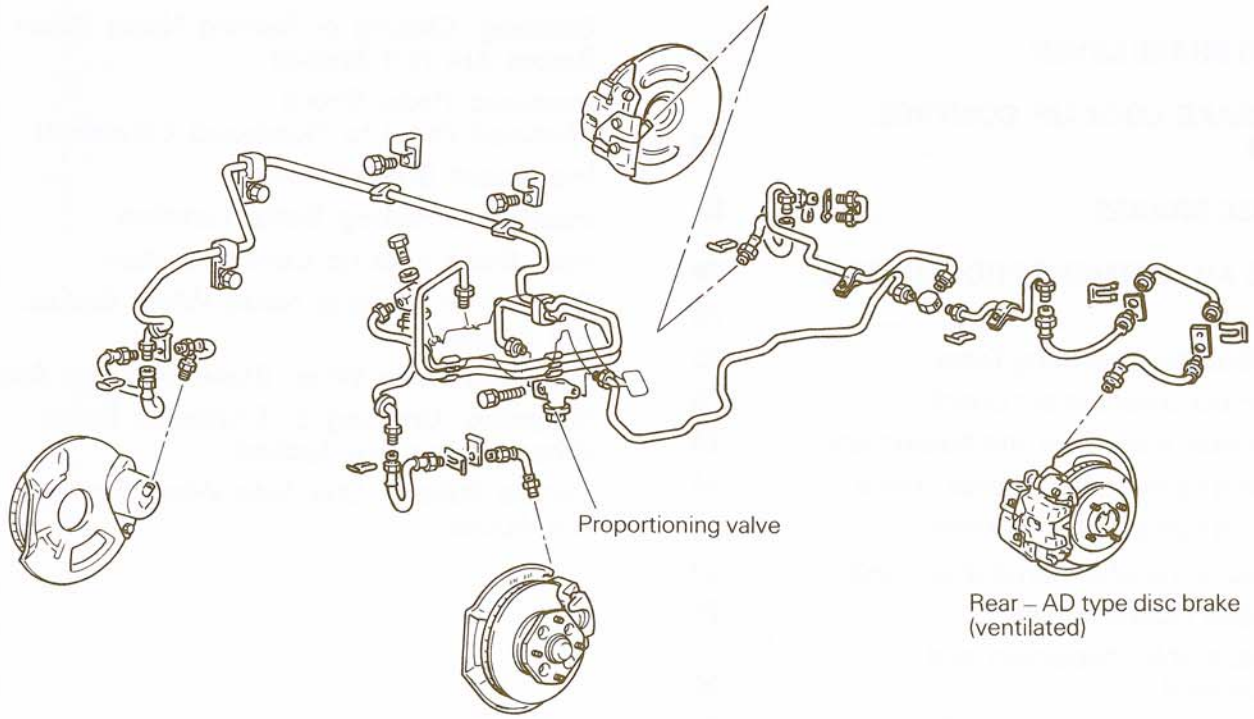

14Y767

The parking brake is a mechanical brake acting on rear wheels. The parking brake lever is installed offset toward the driver's seat so that it is easy to manipulate. The brake cable arrangement is V-type. The parking brake lever stroke is adjustable by means of the equalizer installed beneath the floor console.

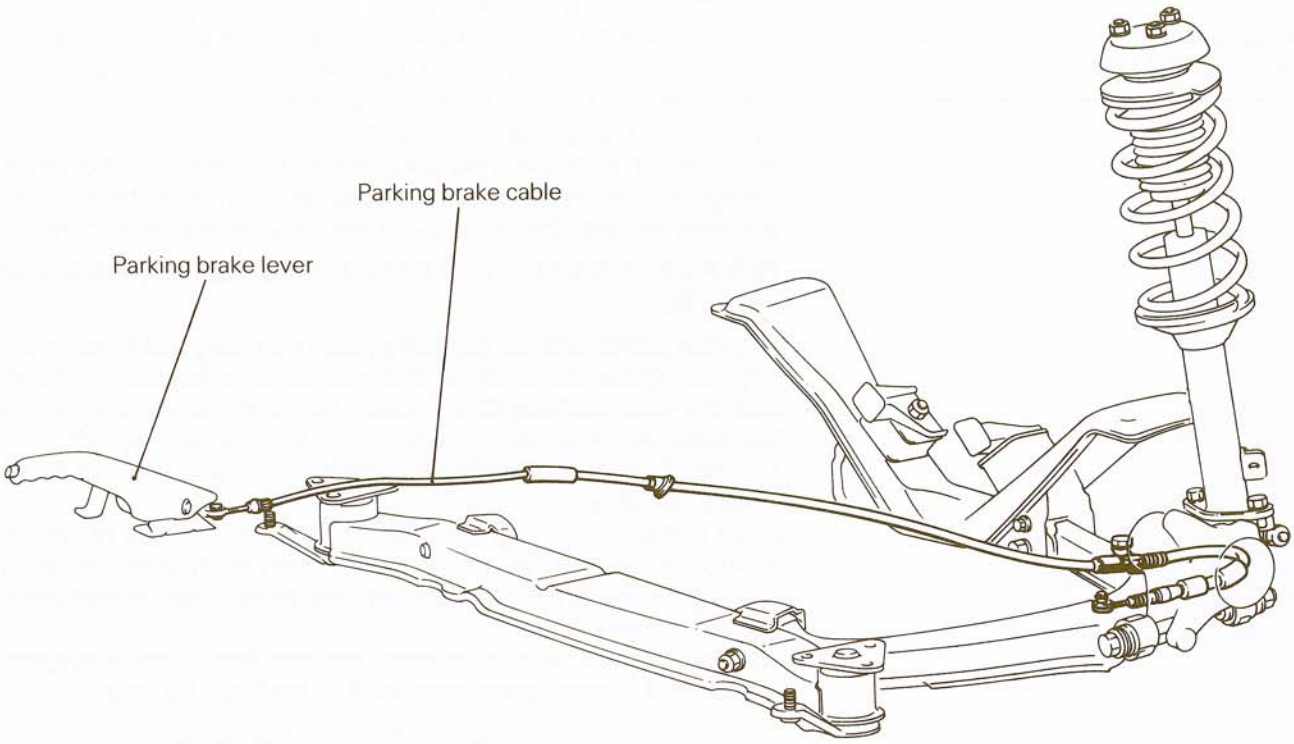

14Y509

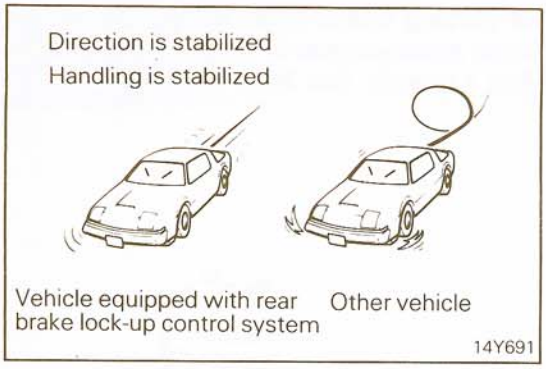

REAR BRAKE LOCK-UP CONTROL SYSTEM

SUMMARY

This system is an automatic brake control system designed to achieve maximum braking efficiency for quick stops on wet icy road surfaces, and to reduce the possibility of the vehicle skidding. If the wheels become locked when the brakes are applied suddenly while driving on roads slippery with snow or rain, the braking efficiency will be drastically reduced, and in addition, the driver could possibly lose complete control of the vehicle. The rear brake lock-up control system is designed to reduce the possibility of these dangerous conditions occurring by automatically maintaining optimum control of braking in accordance with the road conditions. This system, however, is designed for rear wheel control only. If the front wheels become locked, the brakes will not be automatically controlled.

THE PRINCIPLES OF THE REAR BRAKE LOCK-UP CONTROL SYSTEM

The rear brake lock-up control system is designed to control the physical characteristics of the relationship between the tires and the road surface (the friction factor between the tires and the road surface and the slipping rate of the tires*).
The illustration shows the basic curves of μ versus s** and of lateral stability.
From the illustration, it can clearly be seen that, by maintaining control in the area of μ max (the maximum friction factor), the braking distance can be reduced, and in addition, lateral stability can be maintained.
This rear brake lock-up control system has been designed to implement these principles in the braking function.

$$\text{* Slipping rate (s)} = \frac{\text{Speed of the vehicle} - \text{The speed of the wheels}}{\text{Speed of the vehicle}}$$

** The curve of μ versus s is determined by the relationship between the road surface friction factor and the slipping rate.

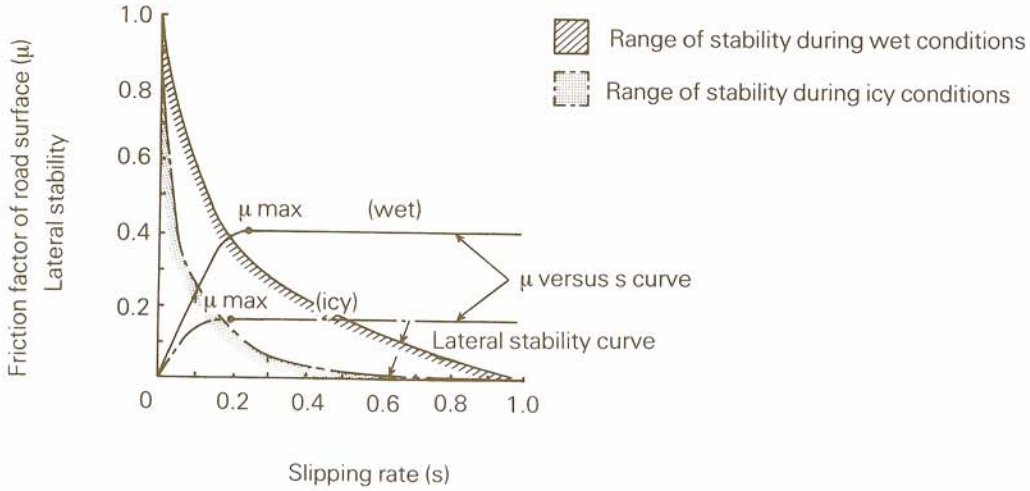

14Y697

COMPONENTS

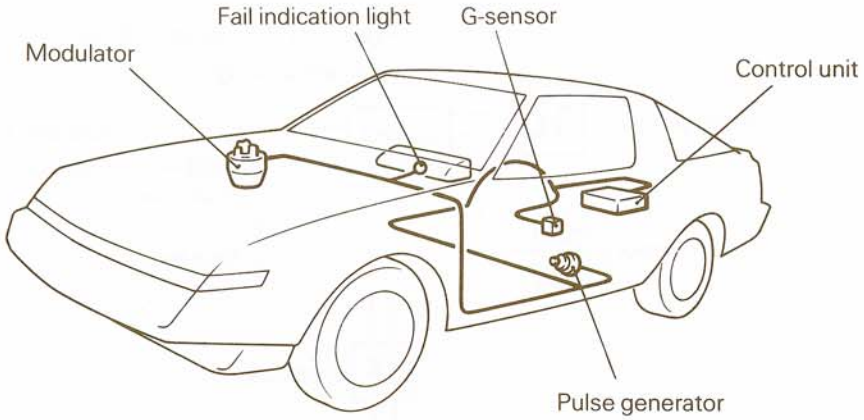

14Y692

The rear brake lock-up control system is composed of the following five units:

PULSE GENERATOR

Generates a rotation pulse in accordance with the speed of the rear wheels.

G-SENSOR

Generates a voltage in accordance with the reduction of the vehicle speed.

CONTROL UNIT

Controls each of the signals.

MODULATOR

Controls the pressure of the brake fluid.

FAIL INDICATION LIGHT

Illuminates in the event of a malfunction of the control unit.

DIAGRAM OF THE FLUID PRESSURE AND VACUUM CIRCUITS

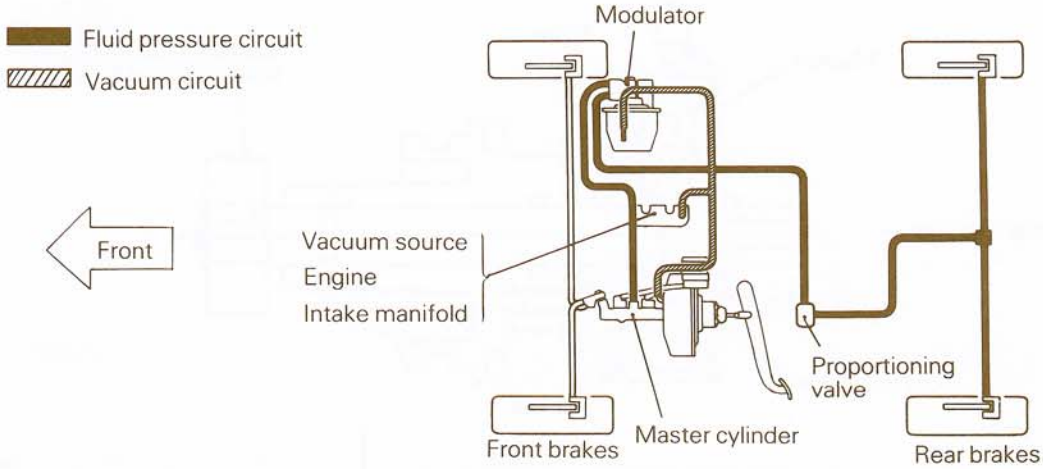

14Y694

ELECTRIC CIRCUIT DIAGRAM

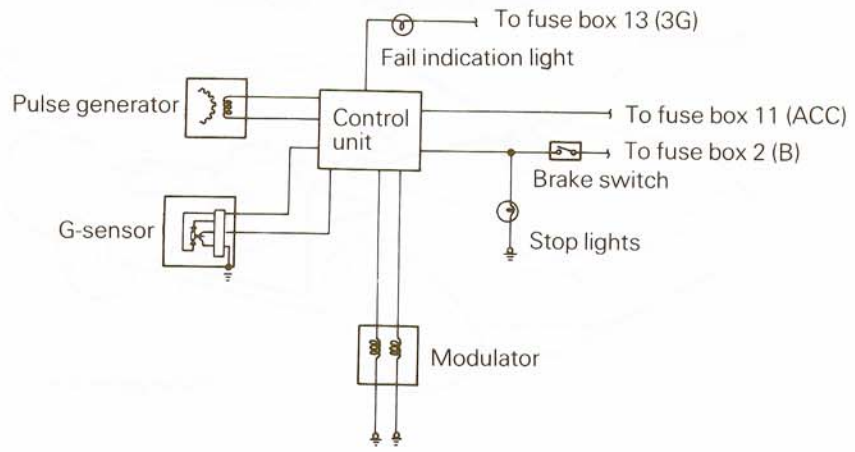

14Y706

OPERATION DESCRIPTION

Pulse Generator (Detection of the Speed of the Wheels)

The pulse generator is composed of a permanent magnet, a coil and a rotor. It is installed at the speedometer exit port of the transmission. The rotor is rotated by the speedometer drive gear. The magnetic flux generated from the permanent magn varies according to the rotation of the rotor, and an AC voltage is generated in the coil (Electromagnetic induction action). The AC voltage is proportionate to the rotating speed of the rotor, and the frequency varies. Accordingly, the speed of the wheels is detected by using the frequency variations of the AC voltage generated by the pulse generator.
The frequency of the generated voltage is the average value of the speeds of the left and right wheels.

Construction of the pulse generator

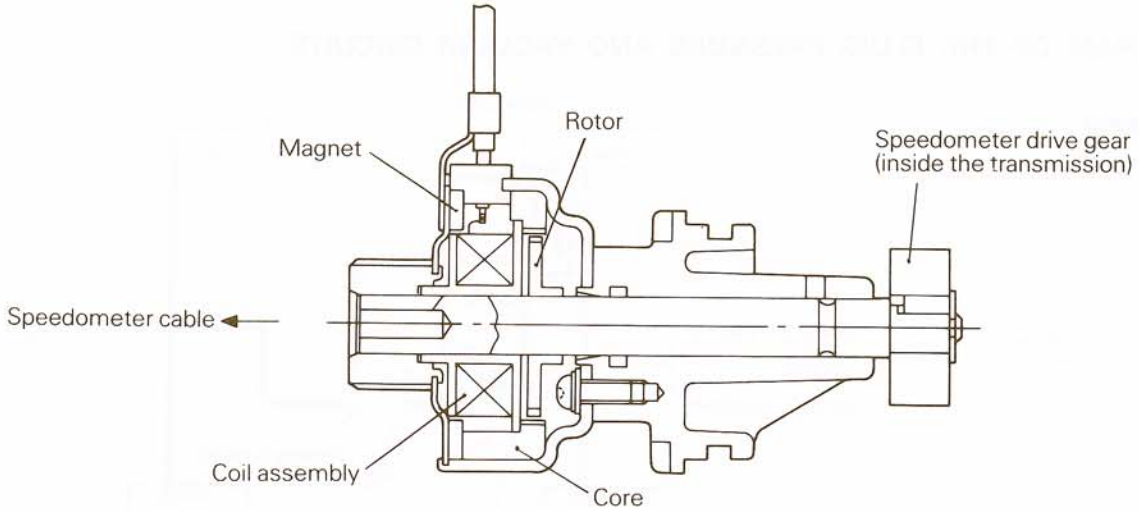

14Y709

STB Revision

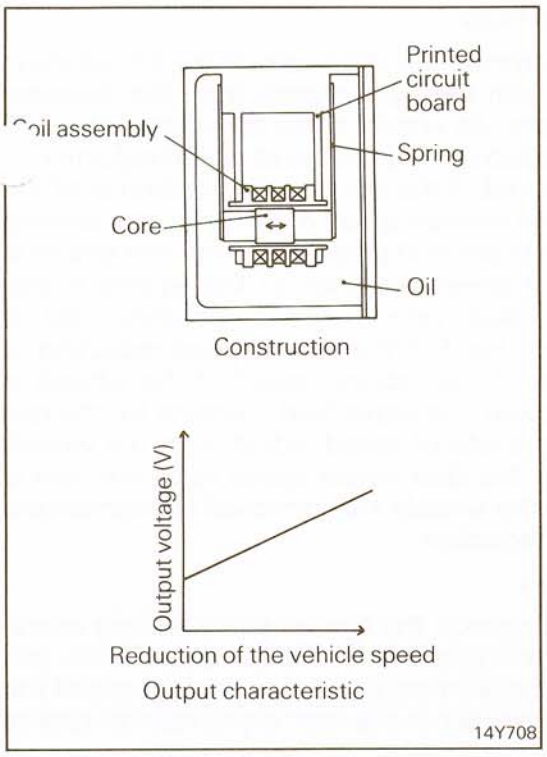

G-Sensor (Detection of the Reduction of the Vehicle Speed)

The G-sensor is composed of a differential transformer, a control circuit (in the form of a printed circuit board), etc. It is installed on the floor of the baggage compartment.
The core within the differential transformer is usually stationary at the center of the coil; however, when a reduction in speed is applied, the core moves and a voltage corresponding to the amount of displacement of the core is generated. In other words, the extent of the reduction in the vehicle speed is detected.

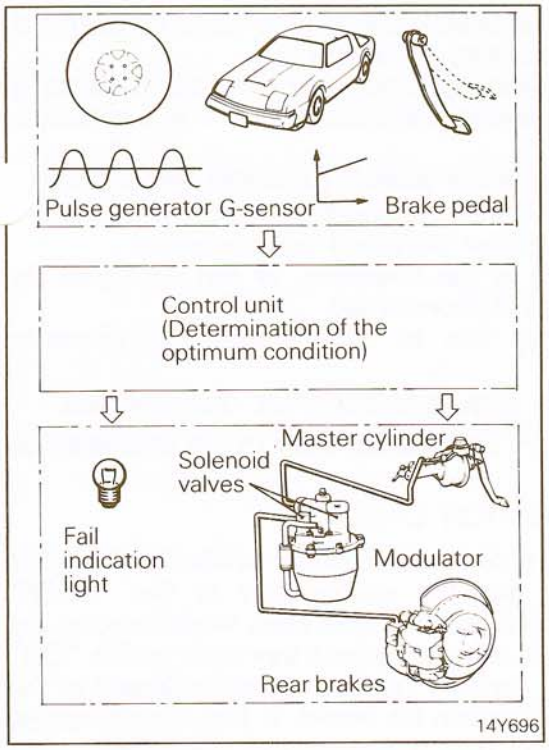

Control Unit (Signal Control)

The control unit is installed inside the baggage compartment. It receives the signals from the pulse generator, the G-sensor, and the brake switch (which is also used as the stop light switch), and transmits the bake fluid pressure control signal to the modulator. If there is a malfunction in either the control unit or the modulator (the solenoid valve section), or in the event of an open circuit, the condition is detected. The brake system is returned to conventional operation, and the fail indication light illuminates to warn the driver of the existence of a malfunction. In addition, if an open circuit occurs in the wiring of the control unit power supply, the G-sensor, the inside of the pulse generator, or the brake switch (input wiring), or if all the stop light bulbs burn out, the brake system is returned to conventional operation, and the fail indication light illuminates in the same way to warn the driver.
The signal to lower the brake fluid pressure of the rear brakes causes the modulator release valve (the valve used to lower the brake fluid pressure) to operate in the event that the amount of slipping of the tires on the road surface becomes greater than the specified value which is determined in accordance with the speed reduction of the wheels and also in the event that the speed reduction of the wheels becomes greater than the specified value in relationship to the reduction of the vehicle speed. Note that there is no lock-up control of the rear brakes when the speed of the vehicle is approximately 8 km/h (5 mph) or less.

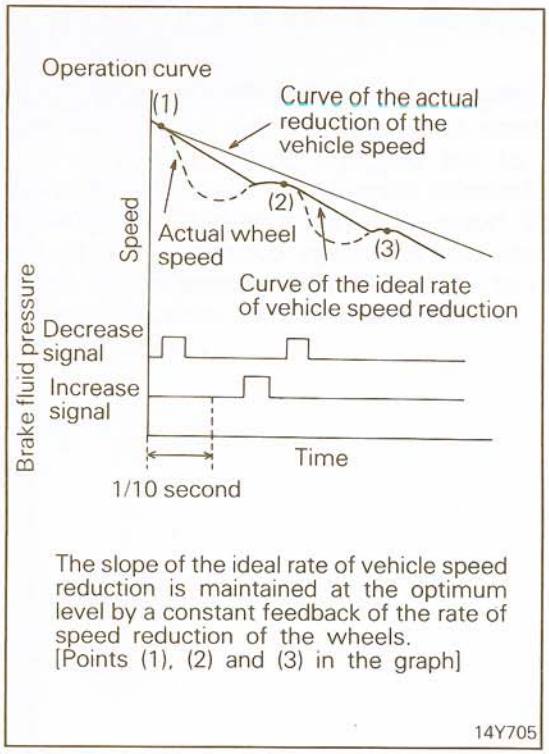

The slope of the ideal rate of vehicle speed reduction is maintained at the optimum level by a constant feedback of the rate of speed reduction of the wheels.
[Points (1), (2) and (3) in the graph]

14Y705

OUTLINE OF OPERATION

The control unit determines the ideal vehicle speed reduction curve in accordance with the input signals from the G-sensor and the pulse generator. As shown in the operation curve, the ideal vehicle speed reduction and the actual speed reduction the wheels are compared. If the actual speed reduction of the wheels is greater (if the rotation speed of the wheels is slowing down too rapidly), the brake fluid pressure for the rear brakes is decreased, the rate of speed reduction of the wheels is also decreased, and the ideal vehicle speed reduction rate is restored. On the other hand, if the actual speed reduction of the wheels is smaller (if the rotation speed of the wheels is slowing down too slowly), the brake fluid pressure for the rear brakes is increased, the rate of speed reduction of the wheels is also increased, and the ideal wheel speed reduction rate is restored. In this way, the wheels are controlled to maintain the ideal rate of speed reduction.

FAIL-SAFE FUNCTION

The fail-safe function causes the control unit to cease operation, the brake system to return to conventional operation, and the fail indication light to illuminate in the event that any of the following malfunctions occur in the rear brake lock-up control system:

1. The wiring of the solenoid valve used for vacuum control of the modulator becomes disconnected.
2. The wiring of the solenoid valve used for vacuum control of the modulator operates continuously for five seconds or longer.
3. The wiring of the brake switch becomes disconnecte
4. A problem occurs inside the pulse generator, or the wiri of the pulse generator becomes disconnected.
5. A problem occurs in the G-sensor, or the wiring of the G-sensor becomes disconnected.
6. The power supply line of the control unit becomes disconnected.
7. The wiring of the stop light becomes disconnected.

If the fail indication light illuminates, refer to the troubleshooting section.

CONTROL UNIT FUNCTION CHECK

Run the engine for five seconds or longer while the vehicle is not in motion. Next, set the ignition key to the "LOCK" position, depress the brake pedal, and then, while keeping the brake pedal depressed, set the ignition key back to the "ON" position. At this time, confirm that the operation sound of the modulator solenoid valve can be heard. If this sound can be heard, then the control unit is functioning normally.
In other words, self-diagnosis of the control unit is done by causing the release solenoid valve to operate.

Modulator (Vacuum-servo Type Brake Fluid Pressure Control)

The modulator receives the control signal (electrical signal) from the control unit, and controls the brake fluid pressure for the rear brakes.
The modulator is composed of a brake fluid pressure control section to control the brake fluid pressure for the rear brakes, a vacuum drive section to drive the brake fluid pressure control section, and a solenoid valve to control the vacuum of the vacuum drive section.

OPERATION DESCRIPTION

Non-operating Condition

When the solenoid valves (the release solenoid valve and the build-up solenoid valve) are not in the operating condition, the pressures in compartments A and B become equal because of the opening of release seat B. For this reason, the brake fluid plunger is pressed to the right through the vacuum piston by the main spring, the check valve opens, and continuity exists for the master cylinder and the rear brake circuit.

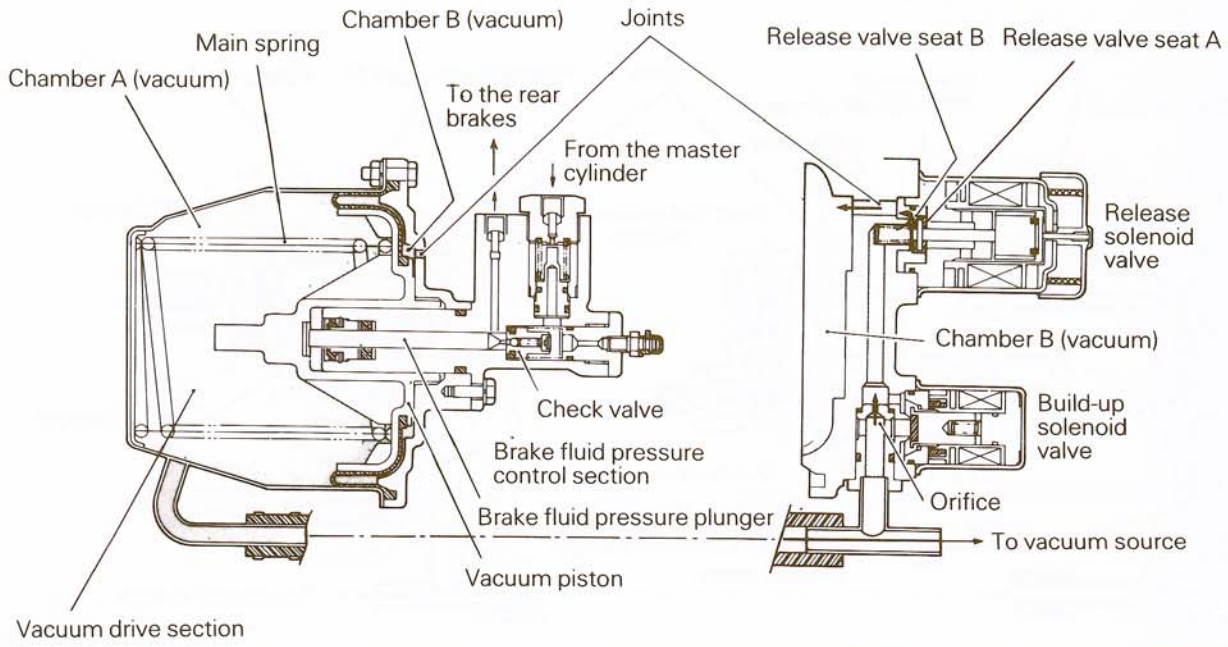

During Operation

1. Reduction of the brake fluid pressure for the rear brakes
If the signal for reduction of the brake fluid pressure is output from the control unit, the electric current will flow to the release solenoid valve, the release plunger will move the left, release valve seat A will open, and, simultaneously, release valve seat B will close. Air will flow into chamber B through the air filter, to the air intake port, and to release valve seat A. When chamber B reaches atmospheric pressure, the pressure difference between chamber A (vacuum condition) and chamber B will cause the vacuum piston to move to the left, compressing the main spring. The brake fluid pressure plunger will move to the left simultaneously with the vacuum piston and close the check valve. When the check valve is closed, the flow of brake fluid from the master cylinder to the rear brakes is disrupted, and, at the same time, the brake fluid pressure is decreased because of the increase in the capacity of brake fluid in chamber C.

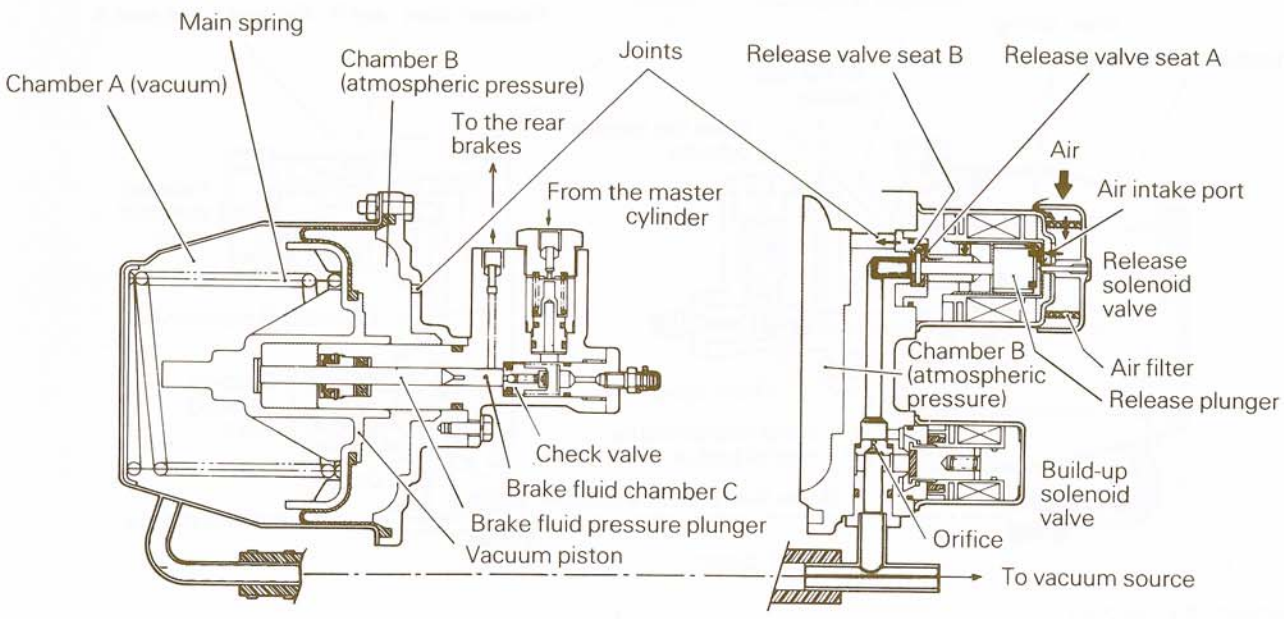

2. Slow restoration of the brake fluid pressure for the rear brakes to a normal level
   Once the brake fluid pressure to the rear brakes has been reduced, the brake fluid pressure reduction signal will cease to be output, the release solenoid valve will return to its non-operating condition, and the air intake to chamber B will be stopped. Because the atmospheric pressure of chamber B passes through the orifice, the pressure in chamber B will gradually change from atmospheric pressure to a vacuum, and, as a result, the pressure difference between chamber A and chamber B will gradually disappear. The brake fluid plunger will be pressed back to the right by the force of the main spring, the condition will be the same as when not operating, and the normal level of brake fluid pressure will be supplied to the rear brakes.
3. Quick restoration of the brake fluid pressure for the rear brakes to normal level
   The electric current will flow to the build-up solenoid valve, the build-up plunger will move to the right, and the build-up valve seat will open. Because the pressure reduction of chamber B is done through both the orifice and the build-up valve seat, the pressure of chamber A and chamber B will quickly equalize.

   NOTE
   If the brake fluid pressure is reduced too much and the level of wheel speed reduction becomes significantly lower than the desired level, the build-up solenoid valve will operate to rapidly achieve the desired level of speed reduction.

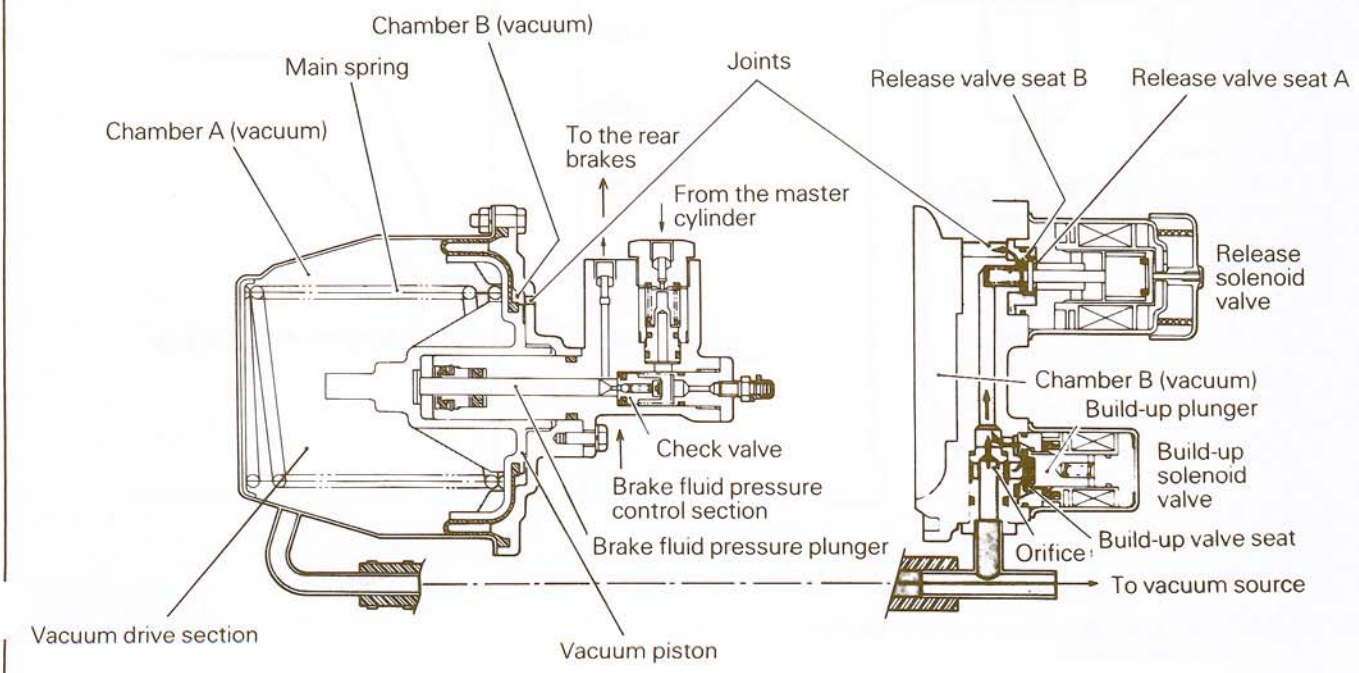

14Y699

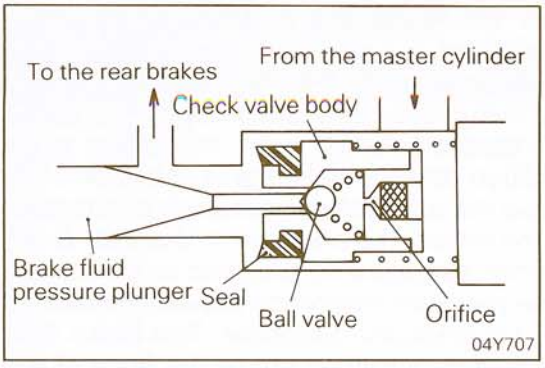

CHECK VALVE FUNCTIONS

1. When the brake fluid pressure for the rear brakes is to be decreased, the brake fluid pressure plunger moves to the left. At this time, the check valve body also moves to the left, the brake fluid line is closed by the seal and ball valve and the rear brake fluid pressure is decreased.
2. When the brake fluid pressure for the rear brakes is to be restored to normal, a sudden increase in the brake fluid pressure is avoided as follows: The brake fluid pressure plunger moves to the right, pushig on the ball valve which opens the brake fluid line, allowing the brake fluid from the master cylinder to pass through the orifice and gradually flow to the rear brakes.

CHOKE VALVE FUNCTION

Extreme increase in the master cylinder brake fluid pressure will occur when the brake pedal is operated suddenly during quick stops etc. The choke valve prevents sudden increase in the rear brake fluid pressure to allow the system to correctly perform the control function even during sudden braking. The brake fluid flows freely to the rear brakes until the brake fluid pressure of the master cylinder reaches 4,903 kPa (711 psi), as shown in the graph.

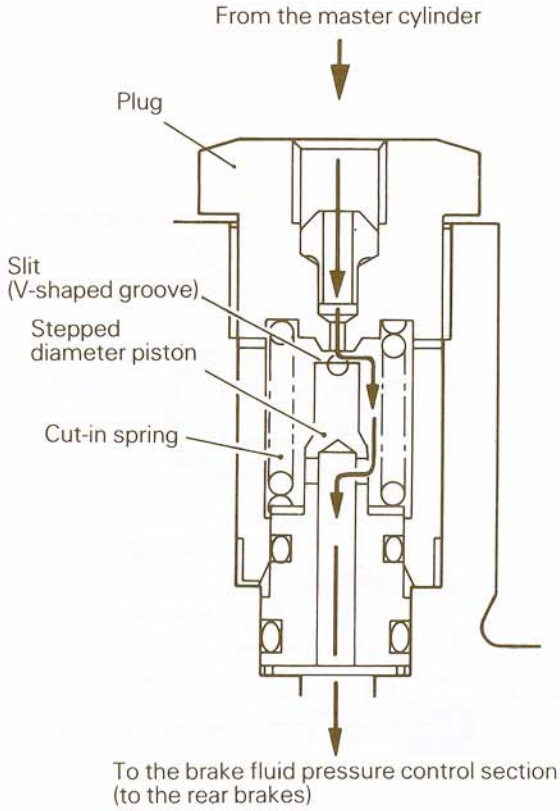

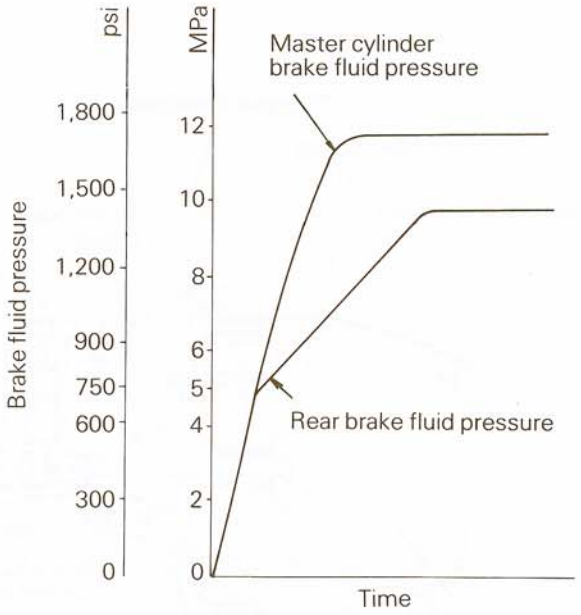

14Y701
14Y703

STB Revision

When the brake fluid pressure reaches 4,903 kPa (711 psi), the stepped diameter piston will press the cut-in spring upward, and contact the plug. The brake fluid will pass only through the V-shaped groove, thus limiting the rate of increase of the brake fluid pressure to the rear brakes.

Fail Indication Light

If any malfunction occurs in the rear brake lock-up control system, a signal from the control unit will cause the fail indication light to illuminate to warn the driver of the malfunction. In addition, the light will illuminate for approximately three seconds when the ignition key is set to the "ON" position in order to provide confirmation that the light is connected and functioning properly.
If the light does not illuminate, there is a malfunction of the light or the light circuit.
If the light remains on, there is a malfunction of the rear brake lock-up control system.

Notes Regarding Handling

1. Because there is such a large number of transistor circuits, the system could be easily and instantly damaged if a terminal is improperly contacted during a check for a malfunction; handle with care.
2. Do not open the cover of the control unit to inspect the internal parts. The unit might easily be damaged if a part is mistakenly touched, or if dust or other foreign particles enter the unit.
3. The connections of the battery MUST NEVER be reversed. During replacement of the battery, be sure to set the ignition key to the "LOCK" position, and connect the new battery carefully so that there are no mistakes.
4. During removal and installation, be careful not to expose any of the components to any violent shaking or impacts. Special care must be observed in the handling of the G-sensor; however, all of the other components of the rear brake lock-up control system should also be handled with care.
5. When checking the system with a circuit tester, be careful not to mistakenly touch an adjacent terminal, or to connect the tester to the wrong terminal. If this occurs, the system could be easily and instantly damaged.
6. If the system is being checked during rainy weather, be careful not to allow water to get into any of the components.
7. The G-sensor is filled with a special oil. If it is opened, it can no longer be used.

SPECIFICATIONS

N05CA- -

GENERAL SPECIFICATIONS

Items	Specifications
Master cylinder	
Type	Tandem type
I.D. mm (in.)	23.81 (0.94)
Brake booster	
Type	Vacuum type
Effective dia. of power cylinder mm (in.)	230 (9.0)
Boosting ratio [Brake pedal depressing force]	4.63 [at 240 N (55 lbs.)]
Front brakes	
Type	FS17 type disc
Disc O.D. mm (in.)	
Vehicles without an intercooler	255 (10.04)
Vehicles with an intercooler	276 (10.87)
Pad thickness mm (in.)	10.0 (0.39)
Cylinder I.D. mm (in.)	57.2 (2.25)
Clearance adjustment	Automatic
Rear brakes	
Type	AD type disc
Disc O.D. mm (in.)	
Vehicles without an intercooler	247 (9.72)
Vehicles with an intercooler	266 (10.47)
Pad thickness mm (in.)	8.5 (0.33)
Cylinder I.D mm (in.)	41.3 (1.63)
Clearance adjustment	Automatic
Proportioning valve	
Split point MPa (psi)	
Vehicles without rear brake lock-up control system	2.90 – 3.29 (420 – 476)
Vehicles with rear brake lock-up control system	3.58 – 4.27 (519 – 619)
Rear brake lock-up control system	
Modulator	
Type	Vacuum booster type
Pulse generator	
Type	Magnet coil type
Parking brake	
Type	Mechanical brake acting on rear wheels
Brake lever type	Lever type
Cable arrangement	V-type

SERVICE SPECIFICATIONS

N05CB--

Items	Specifications
tandard value	
Brake pedal height mm (in.)	177 – 183 (7.0 – 7.2)
Stop light switch outer case to pedal arm clearance mm (in.)	0.5 – 1.0 (0.02 – 0.04)
Brake pedal free play mm (in.)	10 – 15 (0.4 – 0.6)
Brake pedal to toeboard clearance mm (in.)	80 (3.1) or more
Booster push rod to master cylinder piston clearance mm (in.)	0.7 – 1.1 (0.028 – 0.043)
Brake drag force (tangential force of wheel mounting bolts) N (lbs.) [Brake dragging torque Nm (ft.lbs.)]	70 (15.4) or less [4 (3) or less]
Modulator resistance Ω	
Release solenoid valve side	3.8 – 4.8
Build-up solenoid valve side	4.5 – 5.5
Pulse generator resistance Ω	600 – 800
G-sensor installation levelness	Within ±1°
G-sensor output voltage V	
At 0° inclination	1.1 – 1.5
At 90° inclination	4.6 – 5.0
Modulator fluid pressure kPa (psi)	
Split point fluid pressure	4,903 (711)
Set master cylinder fluid pressure	11,768 (1,707)
Max. cut fluid pressure	9,807 (1,422)
Brake booster operating test	
Air-tightness test with no load kPa (mmHg)	3.0 (25)
Air-tightness test under load kPa (mmHg)	3.0 (25)
Booster function test MPa (psi)	
At 100 N (22 lbs.) foot force	2.5 – 4.0 (355 – 570)
AT 300 N (66 lbs.) foot force	6.0 – 8.0 (850 – 1,140)
Non-boosting function test MPa (psi)	
At 100 N (22 lbs.) foot force	0.2 (28) or less
At 300 N (66 lbs.) foot force	1.5 (213) or less
Proportioning valve split point MPa (psi)	
Vehicles without rear brake lock-up control system	2.90 – 3.29 (420 – 476)
Vehicles with rear brake lock-up control system	3.58 – 4.27 (519 – 619)
Output pressure at proportioning valve input pressure of 5.88 MPa (853 psi) – Vehicles without rear brake lock-up control system MPa (psi)	3.79 – 4.18 (549 – 606)
Output pressure at proportioning valve input pressure of 6.86 MPa (996 psi) – Vehicles with rear brake lock-up control system MPa (psi)	4.80 – 5.48 (696 – 795)
Parking brake lever stroke clicks	4 – 5
Limit	
Master cylinder to piston clearance mm (in.)	0.15 (0.006)
Brake pad thickness mm (in.)	1.0 (0.04)
Brake disc thickness mm (in.)	
Front	22.4 (0.88)
Rear	16.4 (0.65)
Brake disc runout mm (in.)	0.15 (0.006)

STB Revision

TORQUE SPECIFICATIONS

N05CC- -

Items	Nm	ft.lbs.
Brake pedal to pedal support	25 – 35	18 – 25
Brake booster to pedal support	8 – 12	6 – 9
Reservoir band	2.5 – 4.0	1.8 – 2.9
Check valve case	40 – 50	29 – 36
Check valve cap	25 – 35	18 – 25
Piston stopper	1.5 – 3.0	1.1 – 2.2
Master cylinder to brake booster	8 – 12	6 – 9
Fitting	15 – 18	11 – 13
Master cylinder to brake line connector	25 – 35	17 – 25
Brake line flare nut	13 – 17	9 – 12
Proportioning valve to body	5.5 – 8.5	4.0 – 6.0
Combination valve to body	8 – 12	6 – 9
Front disc brake hub to disc	35 – 40	25 – 29
Front disc brake dust cover	8 – 12	6 – 9
Front brake to knuckle	80 – 100	58 – 72
Slide pin	85 – 95	61 – 69
Rear axle housing to caliper support	40 – 50	29 – 36
Parking brake bracket to caliper body	40 – 55	29 – 40
Guide pin and lock pin	50 – 60	36 – 43
Bleeder screw	7 – 9	5 – 7
Bleeder cap	20 – 30	14 – 22
Hydraulic cylinder mounting bolts	5 – 10	4 – 7
Valve cap	30 – 40	22 – 29
Pulse generator clamp	10 – 13	7 – 9
Steering shaft to gear box	20 – 25	15 – 18
Steering column mounting special bolt	8 – 11	6 – 8
Front hub to disc	35 – 40	25 – 29
Front wheel bearing nut	20 → 0 → 5	14 → 0 → 4
Rear strut to axle housing	50 – 70	36 – 51
Drive shaft to axle housing	55 – 65	40 – 47
Axle shaft to axle housing	260 – 300	188 – 217
Lower arm shaft (bolt)	70 – 80	51 – 58
Lower arm to axle housing	15 – 20	11 – 14

LUBRICANTS

N05CD- -

Items	Specified lubricants	Quantity
rake pedal bushing and spacer	Multipurpose grease SAE J310, NLGI No. 3	As required
Brake fluid	DOT 3	As required
Lip of cylinder (Front brake assembly)	Repair kit grease (pink)	As required
Front brake caliper plug seat surface	Repair kit grease (pink)	As required
Front brake caliper slide pin hole	Repair kit grease (pink)	As required
Front brake slide pin	Repair kit grease (pink)	As required
Front brake bushing inner surface	Repair kit grease (pink)	As required
Opposing surfaces of front brake inner shims and pad side surfaces of inner and outer shims	Repair kit grease	As required
Rear brake dust boot fitting groove	Repair kit grease (orange)	As required
Rear brake contact surface of caliper body and spring washers	Repair kit grease (orange)	As required
Rear brake lever cap inner surface and lip of lever cap	Repair kit grease (orange)	As required
Rear brake guide pin and lock pin	Repair kit grease (pink)	As required
Parking brake lever bearing	Repair kit grease (orange)	As required
Rear brake caliper support guide pin and lock pin boot	Repair kit grease (pink)	As required
Dust seal of modulator	Repair kit grease (silicone grease)	As required
Clevis pin, bushing and ratchet plate	Multipurpose grease SAE J310, NLGI No. 3	As required

EALANTS AND ADHESIVES

N05CE- -

Items	Specified sealants	Quantity
Front brake slide pin bushing lip section	Repair kit adhesive	As required

SPECIAL TOOLS

N05DA--

Tool (Number and name)	Use	Tool (Number and name)	Use
MB990666-01 Rear disc brake connecting link installer 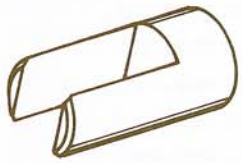	Installation of the spring washer for the rear disc brake automatic adjuster	MB990665-01 Rear disc brake bearing remover and installer 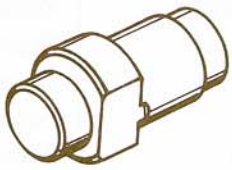	Removal and installatio of the rear disc brake lever assembly bearing

TROUBLESHOOTING

N05EAAE

Symptom	Probable cause	Remedy	Reference page
Vehicle pulls to one side when brakes are applied	Grease or oil on pad or lining surface	Replace	5-29
	Inadequate contact of pad	Correct	–
	Auto adjuster malfunction	Adjust	–
Insufficient braking power	Low or deteriorated brake fluid	Add or refill	–
	Air in brake system	Bleed air	5-29
	Overheated brake rotor due to dragging of pad or lining	Correct	–
	Grease or oil on pad surface	Replace	5-29
	Inadequate contact of pad	Correct	–
	Brake booster malfunction	Correct	5-25
	Auto adjuster malfunction	Adjust	–
	Clogged brake line	Correct	–
	Proportioning valve malfunction	Replace	5-46
Increased pedal stroke (Reduced pedal to floorboard clearance)	Air in brake system	Bleed air	5-29
	Worn pad	Replace	5-29
	Broken vacuum hose	Replace	5-43
	Brake fluid leaks	Correct	5-45
	Auto adjuster malfunction	Adjust	–
	Excessive push rod to master cylinder clearance	Adjust	5-38
	Faulty master cylinder	Replace	5-38
Brake drag	Incomplete release of parking brake	Correct	–
	Incorrect parking brake adjustment	Adjust	–
	Worn brake pedal return spring	Replace	5-35
	Insufficient push rod to master cylinder clearance	Adjust	5-38
	Defective master cylinder piston return spring	Replace	5-40
	Clogged master cylinder return port	Correct	5-40

Symptom	Probable cause	Remedy	Reference page
Insufficient parking brake function	Worn brake pad	Replace	5-32
	Excessive parking brake lever stroke	Adjust the parking brake lever stroke or check the parking brake cable routing	–
	Grease or oil on pad surface	Replace	5-32
	Auto adjuster malfunction	Adjust	–
	Parking brake cable sticking	Replace	–
	Stuck caliper piston	Replace	5-54
Scraping or grinding noise when brakes are applied	Worn brake pad	Replace	5-29
	Caliper to wheel interference	Correct or replace	5-47
	Cracked brake disc	Correct or replace	5-49, 54
Squealing, groaning or chattering noise when brakes are applied	Disc brakes – missing or damaged brake pad anti-squeak shim	Replace	5-30, 49, 50
	Brake discs and pads worn or scored	Correct or replace	5-49, 54
	Improper lining parts	Correct or replace	5-49, 54
	Disc brakes – burred or rusted calipers	Clean or deburr	5-49, 54
	Dirty, greased, contaminated or glazed pad	Clean or replace	5-49, 54
	Incorrect adjustment of brake pedal or booster push-rod	Adjust	5-24, 38
Squealing noise when brakes are not applied	Disc brakes – rusted, stuck	Lubricate or replace	5-49, 54
	Loose or extra parts in brakes	Retighten	–
	Improper positioning of pads in caliper	Correct	5-49, 54
	Improper installation of support mounting to caliper body	Correct	5-49, 54
	Poor return of brake booster or master cylinder	Replace	5-38, 43
	Incorrect adjustment of brake pedal or booster push-rod	Adjust	5-24, 38
Groaning, clicking or rattling noise when brakes are not applied	Stones or foreign material trapped inside wheel covers	Remove stones, etc.	–
	Loose wheel nuts	Retighten	–
	Disc brakes – failure of shim	Replace	5-49, 54
	Disc brakes – loose installation bolt	Retighten	5-49, 54
	Incorrect adjustment of brake pedal or booster push-rod	Adjust	5-24, 38

REAR BRAKE LOCK-UP CONTROL SYSTEM

Inspection items / Symptom	Fuse No. 13	Fuse No. 11	Fuse No. 2	Pulse generator	G-sensor	Stop light switch	Release solenoid valve	Build-up solenoid valve (modulator)	Wiring harness and connector connection	Stop light bulb	Modulator	Control unit
Fail indication light illuminates	①			④	⑤	③	⑥	⑥	⑦	②		⑧
No self-diagnosis		①	①			③	④		⑤	②		⑥
Weak brakes (Braking power is insufficient)				①	②			③			④	⑤
Brakes lock (High tendency to skid)		①	①	④	⑤	③	⑥		⑧	②	⑦	⑨

NOTE
Number in circle indicates inspection sequence.

CIRCUIT DIAGRAM

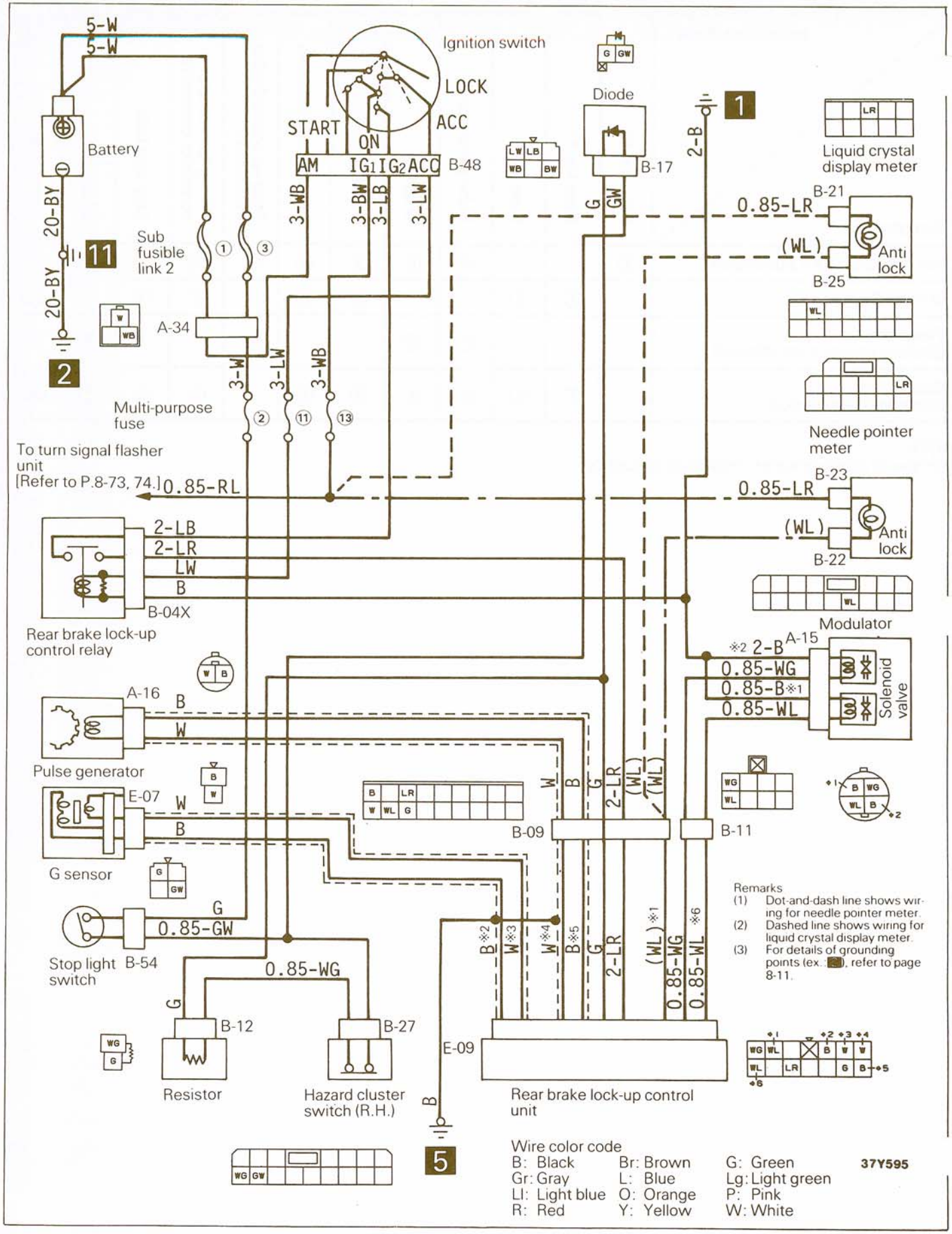

STB Revision

REAR BRAKE LOCK-UP CONTROL SYSTEM – CONTROL SECTION PARTS LAYOUT

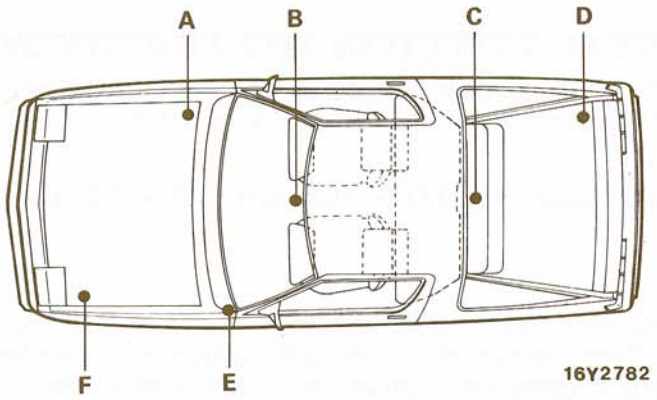

Control section parts list

Part name	Symbol
G-sensor	C
Modulator	A
Pulse generator	B
Rear brake lock-up control relay	E
Rear brake lock-up control unit	D
Resistor	F

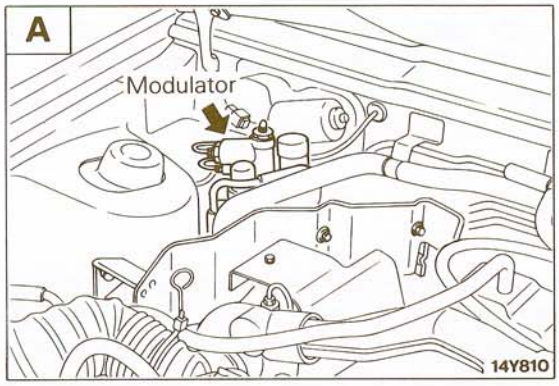

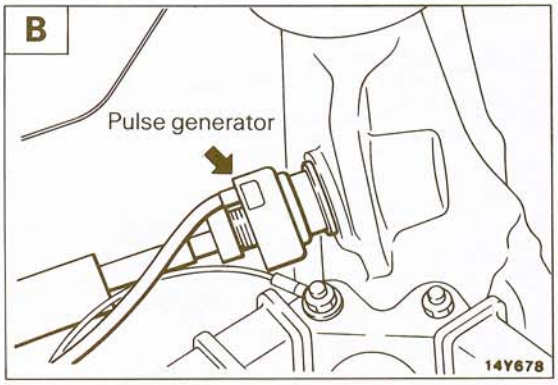

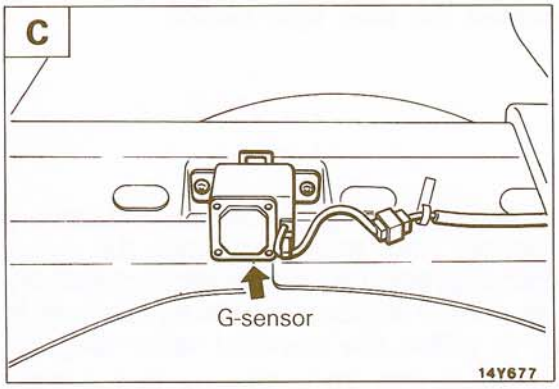

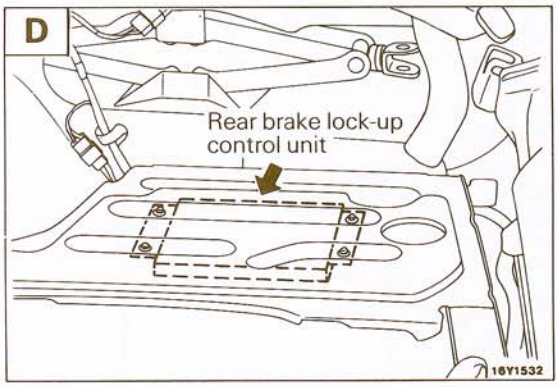

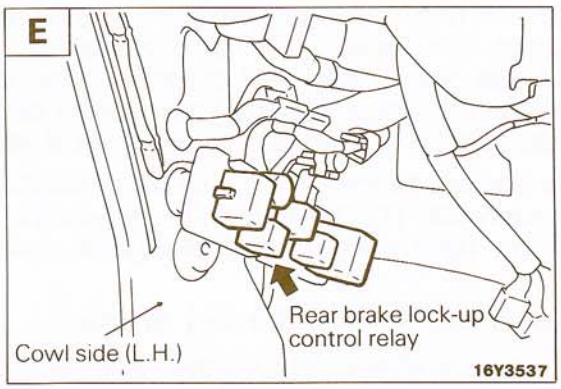

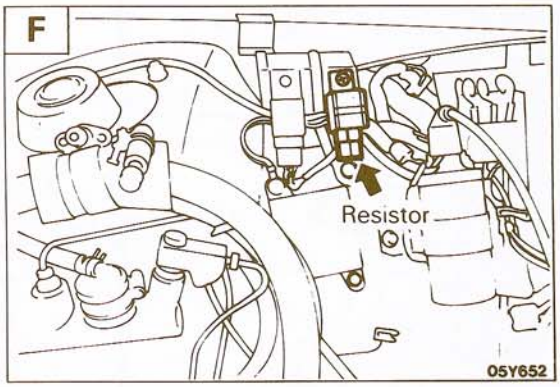

STB Revision

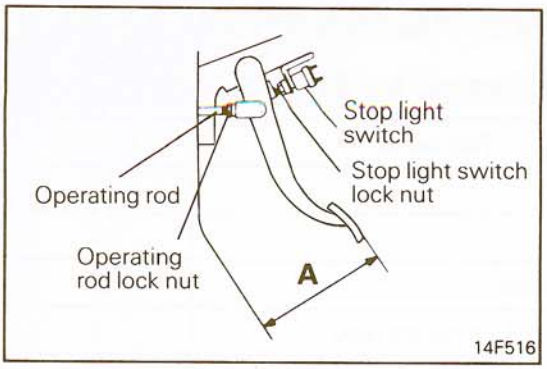

SERVICE ADJUSTMENT PROCEDURES

N05FAAE

BRAKE PEDAL INSPECTION AND ADJUSTMENT

1. Measure the brake pedal height as illustrated. If the brake pedal height is not within the standard value, adjust as follows.

   Standard value (A): 177 – 183 mm (7.0 – 7.2 in.)

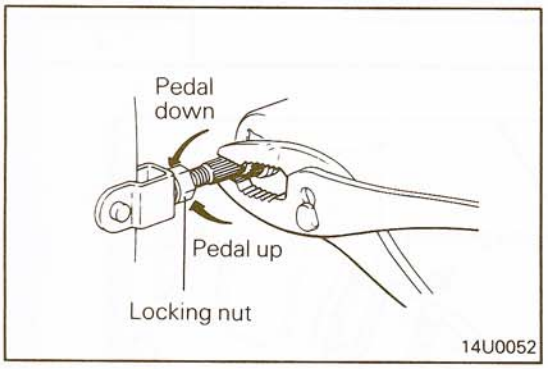

   (1) Disconnect the stop light switch and loosen the lock nut. Then, move the stop light switch to a position where it does not contact the brake pedal arm.
   (2) Adjust the brake pedal height by turning the operating rod with pliers (with the operating rod locking nut loosened), until the correct brake pedal height is obtained.

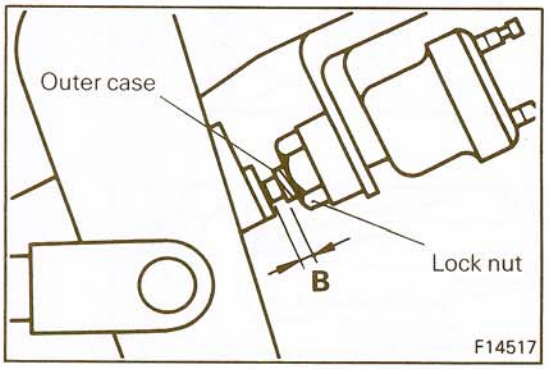

   (3) Adjust the stop light switch until the dimension between the outer case of the stop light switch and the brake pedal arm reaches the standard value, and then lock the switch in place with the locking nut.

   Standard value (B): 0.5 – 1.0 mm (0.02 – 0.04 in.)

   (4) Reconnect the stop light switch.

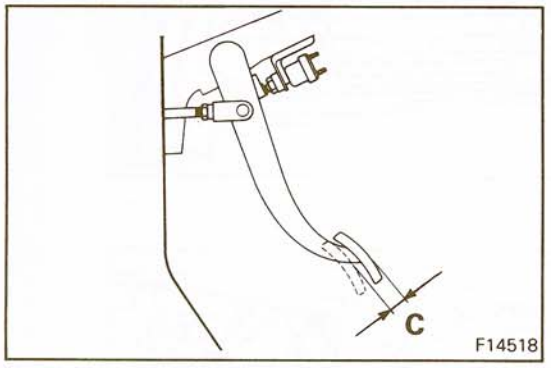

2. While the engine is stopped, depress the brake pedal two or three times. After thus eliminating the vacuum in the brake booster, press the pedal down by hand, and confirm that the amount of movement before resistance is met (the free play) is within the standard value range.

   Standard value (C): 10 – 15 mm (0.4 – 0.6 in.)

   (1) If the free play is less than the standard value, check to make sure that normal clearance is maintained between the stop light switch and the pedal arm.
   (2) If the free play exceeds the standard value, large play between the clevis pin and brake pedal arm is suspected. Check and replace faulty parts if any.

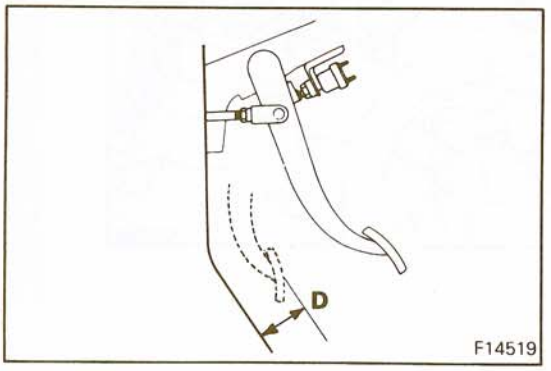

3. Start the engine, depress the brake pedal with a force of approximately 500 N (110 lbs.), and measure the distance between the upper face of the brake pedal and the floor sheet.

   Standard value: 80 mm (3.1 in.) or more

   If the clearance is smaller than the standard value, check f air trapped in the brake line or brake fluid leaks and repair a needed.

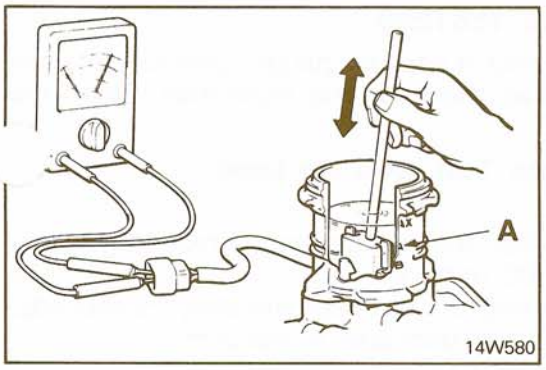

BRAKE FLUID LEVEL SENSOR CHECK N05FBAD

1. Connect an ohmmeter to the brake fluid level sensor connector.
2. Move the float vertically to check continuity. The brake fluid level sensor is okay if it is confirmed that there is no continuity when the float top is above "A" and there is continuity when the float top is below "A".

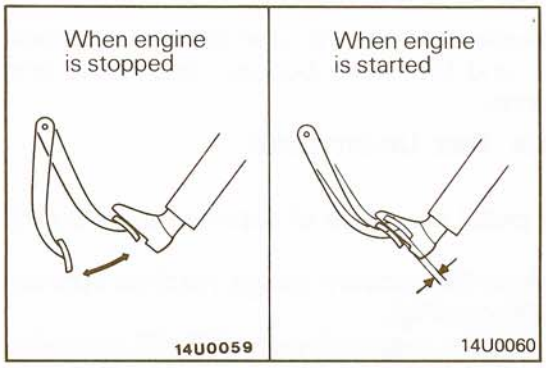

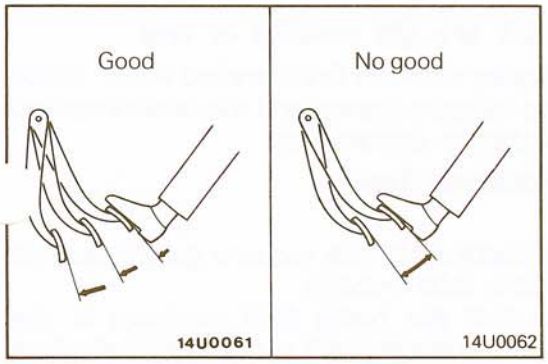

BRAKE BOOSTER OPERATING TESTS N05FCAG

TEST WITHOUT A TESTER

For simple checking of the brake booster operation, carry out the following tests:

1. With the engine stopped, step on the brake pedal several times with the same foot pressure to make sure that the pedal height will not change.
   Then step on the brake pedal and start the engine.
   If the pedal moves downward slightly, the booster is in good condition.
   If there is no change, the booster is defective.
2. Run the engine for one or two minutes, and then stop it. Step on the brake pedal several times with normal pressure.
   If the pedal depress fully the first time but gradually becomes higher when depressed succeeding times, the booster is operating properly.
   If the pedal height remains unchanged, the booster is faulty.
3. With the engine running, step on the brake pedal and then stop the engine. Hold the pedal depressed for 30 seconds. If the pedal height does not change, the booster is in good condition. If the pedal rises, the booster is faulty.

If the above three tests are okay, the booster performance can be determined as good.
If one of the above three tests is not okay at last, the check valve, vacuum hose or booster will be faulty.

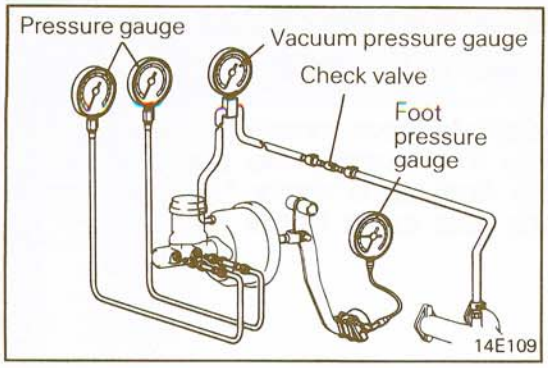

TEST USING SIMPLE TESTERS

Prior to the test, connect a vacuum gauge, pressure gauges and foot force gauge as shown in the illustration. Bleed the system.

Test 1 – Air-tightness Test with No Load

(1) Start the engine.
(2) Stop the engine when the vacuum gauge reaches approximately 63 kPa (500 mmHg).
After stopping the engine, wait approximately 15 seconds, and then measure the decrease in vacuum.

Standard value: 3.0 kPa (25 mmHg) or less

(3) If the vacuum decrease exceeds the standard value, check the vacuum hoses, and the brake booster, and make any necessary corrections.

Test 2 – Air-tightness Test Under Load

(1) Start the engine.
(2) Depress the brake pedal at a force of approximately 200 N (44 lbs.).
Stop the engine when the vacuum gauge reaches approximately 68 kPa (500 mmHg).
(3) After stopping the engine, wait approximately 15 seconds, and then measure the decrease in vacuum.

Standard value: 3.0 kPa (25 mmHg) or less

(4) If the vacuum decrease exceeds the standard value, check the check valve, the vacuum hoses, and the brake booster, and make any necessary corrections.

Test 3 – Boosting Function Test

(1) Start the engine.
(2) Depress the brake pedal when the vacuum gauge reaches approximately 68 kPa (500 mmHg).
(3) Check to be sure that the brake fluid pressure is the standard value when the brake pedal is depressed at a foot force of 100 N (22 lbs.) and 300 N (66 lbs.).

Standard value:
At 100 N (22 lbs.) foot force
2.5 – 4.0 MPa (355 – 570 psi)
At 300 N (66 lbs.) foot force
6.8 – 8.0 MPa (850 – 1,140 psi)

Test 4 – Non-boosting Function Test

(1) Stop the engine.
(2) Depress the brake pedal several times.
(3) Confirm that the vacuum gauge indicates 0 kPa (0 mmHg).
(4) Check to be sure that the brake fluid pressure is the standard value when the brake pedal is depressed at a foot force of 100 N (22 lbs.) and 300 N (66 lbs.).

Standard value:
At 100 N (22 lbs.) foot force
0.2 MPa (28 psi) or less
At 300 N (66 lbs.) foot force
1.5 MPa (213 psi) or less

STB Revision

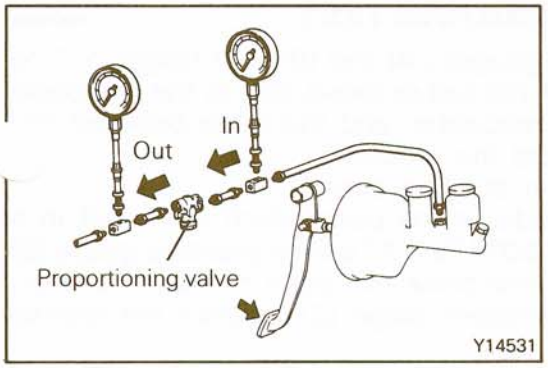

PROPORTIONING VALVE FUNCTION TEST N05FKAD

1. Connect two pressure gauges, one each to the input side and output side of the proportioning valve, as shown in the illustration.
2. With the brake pedal depressed, make the following measurements and check to be sure that the measured values are within the allowable range.
   (1) Output pressure begins to drop relative to input pressure (split point)

   Standard value:
   Vehicles without rear brake lock-up control system
   2.90 – 3.29 MPa (420 – 476 psi)
   Vehicles with rear brake lock-up control system
   3.58 – 4.27 MPa (519 – 619 psi)

   (2) Relationship between input pressure and output pressure

   Standard value:
   Vehicles without rear brake lock-up control system at input pressure of 5.88 MPa (853 psi)
   3.79 – 4.18 MPa (549 – 606 psi)
   Vehicles with rear brake lock-up control system at input pressure of 6.86 MPa (996 psi)
   4.80 – 5.48 MPa (696 – 795 psi)
3. If the measured pressures are not within the standard value, replace the proportioning valve.

REAR BRAKE LOCK-UP CONTROL SYSTEM FUNCTION CHECK N05FFAA

SELF-DIAGNOSIS CHECK

1. Operate the engine for five seconds or longer while the vehicle is not moving, turn the ignition key to the "LOCK" position, and then depress the brake pedal.
2. Turn the ignition key from the "LOCK" position to the "ON" position, and confirm that the sound of the modulator operating can be heard. If the operating sound can be heard, the solenoid valve is functioning properly.

   NOTE
   The sound of the modulator operating should be a dull clicking sound.

FUNCTION CHECK

1. Raise the vehicle on a jack (the rear wheels should be completely off the ground), and then support the vehicle on rigid racks. Block the front wheels.
2. Warm up the engine, see the shift lever to the second gear position, depress the accelerator pedal, and maintain the speedometer reading at approximately 30 km/h (19 mph).
3. Keep the accelerator pedal depressed in the same position, and then depress the brake pedal suddenly.
4. The brakes will attempt to stop the rotation of the rear wheels; however, because the operation of the anti-skid brake system will cut off the supply of brake fluid pressure, the rotation of the rear wheels will be restored. This reduction and increase process should keep repeating itself.

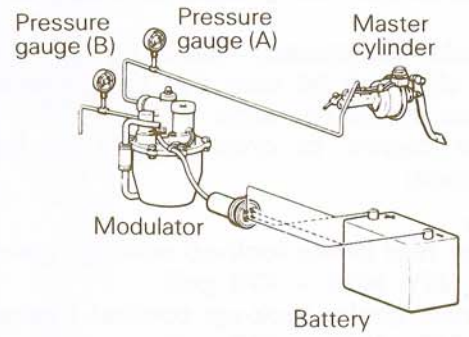

——— Connections during operation of the release solenoid valve

----- Connections during operation of the build-up-solenoid valve

14Y688

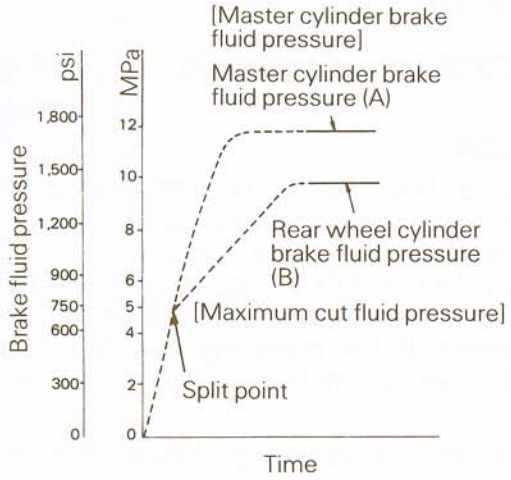

14Y702

MODULATOR OPERATING TEST N05FGAA

1. Connect pressure gauges [(A) and (B) with ranges of 0 to 15,000 kPa (0 to 2,100 psi) or more], one to the rear-brake exit point of the modulator, and the other between the master cylinder and the modulator.
2. Let the engine run at idling speed.
3. Hold the brake pedal at the point which will result in a reading of about 4,900 kPa (710 psi) on pressure gauge (B) connected to the rear-brake exit point of the modulator.
4. While watching pressure gauge (B), operate the release solenoid valve.
   The condition is normal if the reading suddenly drops almost to 0 kPa (0 psi).
5. While maintaining the condition in step 4, operate the build-up solenoid valve.
6. Then, while in the conditon in step 5, stop the operation of the release solenoid valve while watching the pressure gauge.
   If the pressure suddenly rises to about 4,900 kPa (710 psi), the condition is normal.
7. Repeat step 4 and then, with the build-up solenoid valve in the non-operating condition, stop the operation of the release solenoid valve while watching pressure gauge (B). If the pressure rises about one second later to about 4,900 kPa (710 psi), the condition is normal.
8. With both solenoid valves in the non-operating condition, increase the fluid pressure of the master cylinder, and check the relationship with the rear brake fluid pressure.

   NOTE
   Check to be sure that gauge (B) show a reading of 9,8(kPa (1,422 psi) when the brake pedal is depressed unti gauge (A) shows a reading of 11,768 kPa (1,707 psi).
   If these values cannot be satisfied, replace the modulator.

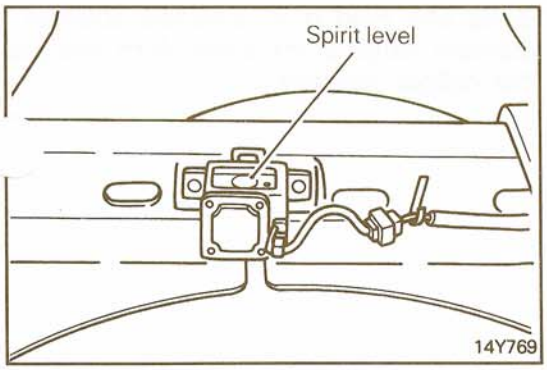

G-SENSOR INSTALLATION LEVELNESS CHECK

N05FHAA

1. Position the unladen vehicle on a level place.
2. Use a spirit level to measure levelness of the G-sensor in lateral and longitudinal directions and check to see that it is within the standard value range.

   Standard value: Within ±1°
3. If it is out of the standard value, use adequate shim to adjust to the standard value.

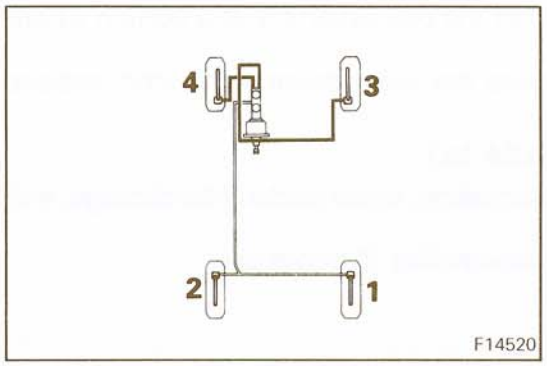

BLEEDING

N05FYAF

1. The brake hydraulic system should be bled whenever the brake tube, brake hose, master cylinder or wheel cylinder has been removed or whenever the brake pedal feels spongy when depressed.
2. Bleed the brake system in the sequence shown in the illustration.

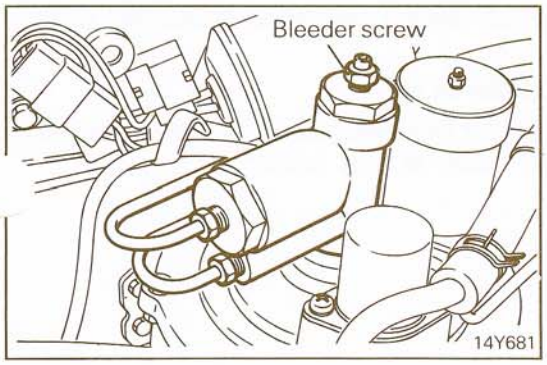

3. On vehicles with a rear brake lock-up control system, purge air from the modulator before purging air from the front wheel cylinders.

   Specified brake fluid: DOT 3

   Caution
   Use the specified brake fluid. Avoid using a mixture of the specified brake fluid and other fluid.
   If brake fluid is exposed to the air, it will absorb moisture; as water is absorbed from the atmosphere, the boiling point of the brake fluid will decrease and the braking performance will be seriously impaired. For this reason, use a hermetically sealed 1 lit. (1.06 U.S.qt., 0.88 Imp.qt.) or 0.5 lit. (0.53 U.S.qt., 0.44 Imp.qt.) brake fluid container.
   Firmly close the cap of the brake fluid container after use.

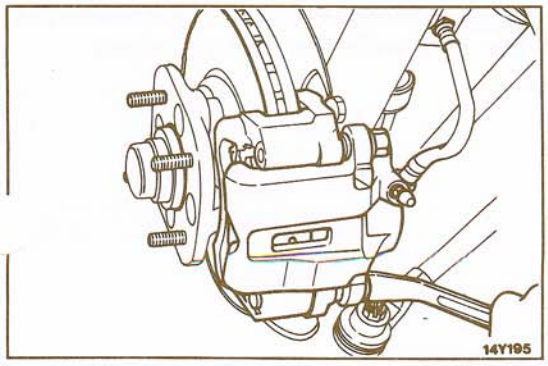

PAD ASSEMBLY INSPECTION AND REPLACEMENT

N05FZAG

FRONT

(1) Remove the lower slide pin.

NOTE
The slide pin is coated with a special grease. Be careful to avoid wiping away this special grease or getting the slide pin dirty.

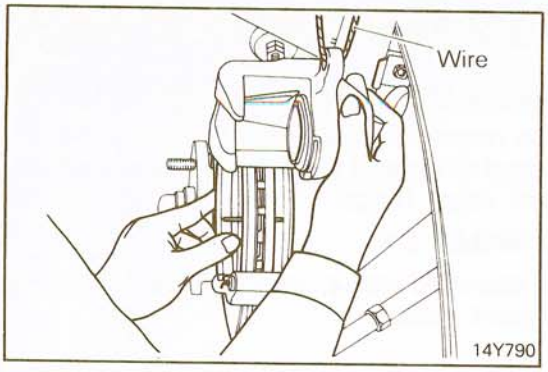

(2) Raise the caliper body and hold it in a raised position.
(3) Remove the pad retainers, outer shim, inner shim and pad assemblies from the caliper support.

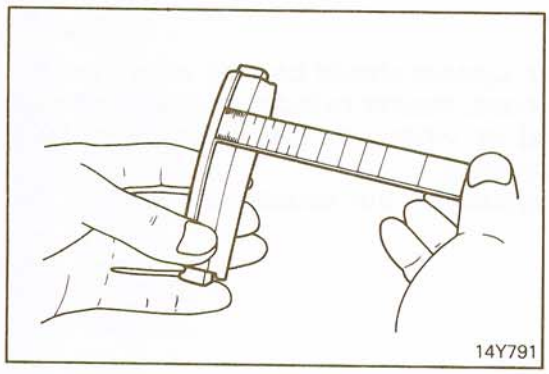

(4) Measure thickness of the pad assembly at a portion where wear is severest.
(5) If the pad assemblies are worn beyond the limit, replace them.

Limit: 1.0 mm (0.04 in.)

(6) Check pads for deformation, metal backing for damage, and oil on the linings.
Replace the pad assemblies if necessary.

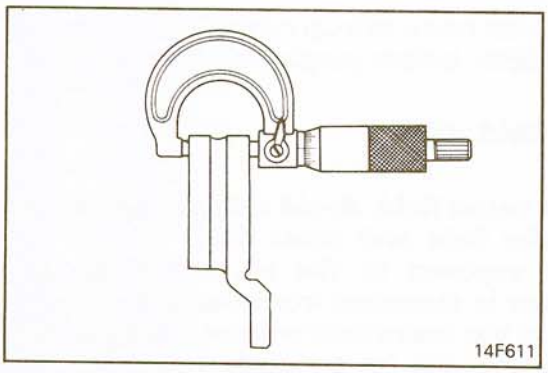

(7) Measure pad assembly sliding section of brake disc at four or more points.

Limit: 22.4 mm (0.88 in.)

(8) Replace the brake disc if the brake disc thickness is smaller than specified limit even at one point.

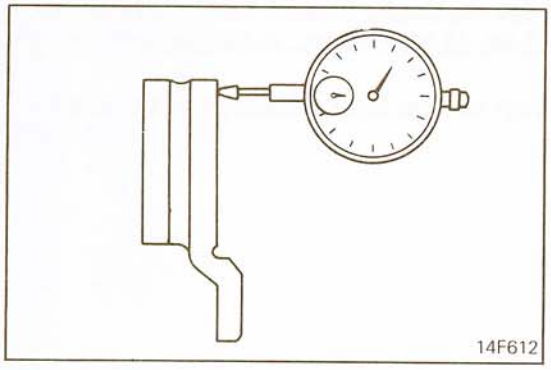

(9) Measure the brake disc runout at its peripheral end face.

Limit: 0.15 mm (0.006 in.)

(10) If the brake disc runout exceeds the limit, change its position on the hub and/or retorque evenly.
(11) Check the runout again. If it cannot be corrected, replace the brake disc. Do not resurface it.

NOTE
Before measurement of brake disc runout, check wheel bearing for play and correct if necessary. Also clean the disc surface to remove dirt and rust before runout measurement.

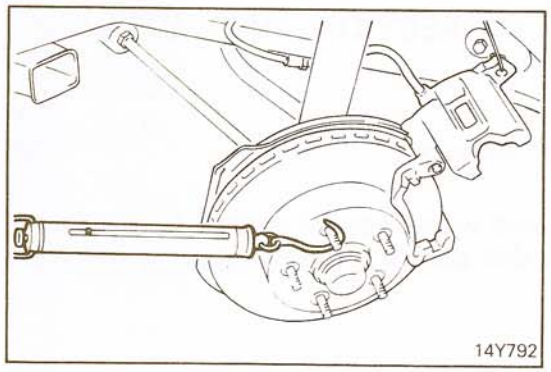

(12) To determine the dragging force of the pad, measure the rotational force of the hub with the pad removed.

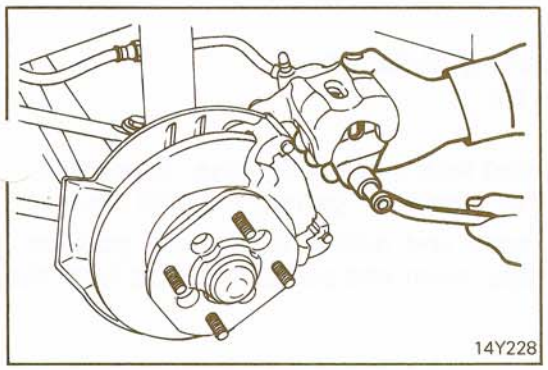

(13)Push in the piston.

NOTE
Be sure that the dust boot does not protrude from the end of the piston.

If the reservoir is full of brake fluid, pushing in of the piston will cause overflow of fluid from the reservoir. Drain somewhat, therefore, before operation.
Before setting the special tool, clean the piston.

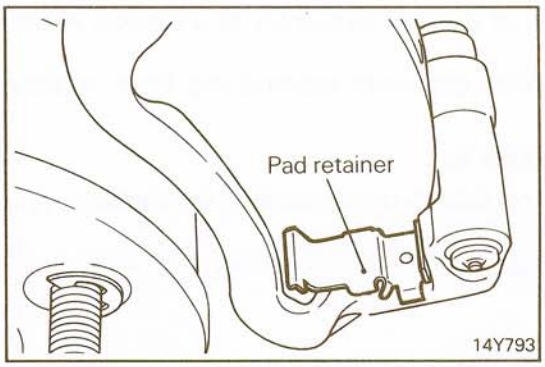

(14)Install the pad retainer to the caliper support.

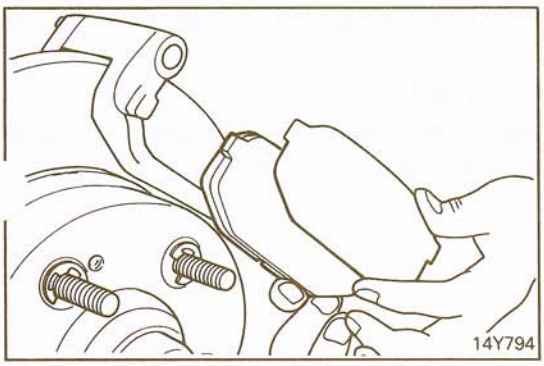

(15)Install the inner and outer shims to the pad assembly.
(16)Install the assemblies to the caliper support.

Caution
The pad assemblies should be replaced as sets (inner and outer) for both the left and right wheels at the same time.

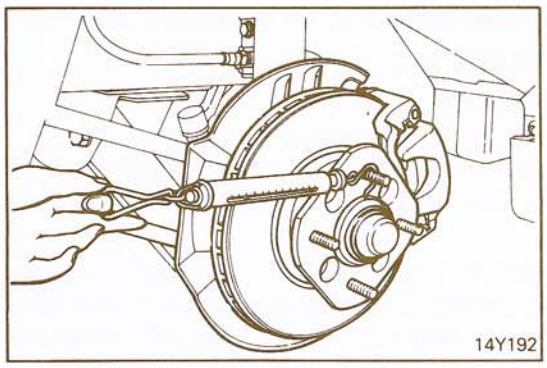

(17)Mount the caliper body to the caliper support.
(18)Measure the brake dragging torque by starting the engine, maintaining the brake pedal in the depressed position for approximately 5 seconds while the vehicle is not moving, and then rotating the disc ten revolutions in the forward direction and using a spring balance to measure the brake drag in the forward direction.

Standard value: 70 N (15.4 lbs.) or less
[Brake dragging torque: 4 Nm (3.0 ft.lbs.) or less]

(19)If the difference between the value measured while the brake pads are mounted and that obtained while they are removed exceeds the standard value, disassemble the caliper assembly, and check for dirt and/or corrosion on the sliding part of the piston, and also for deterioration of the piston seal.

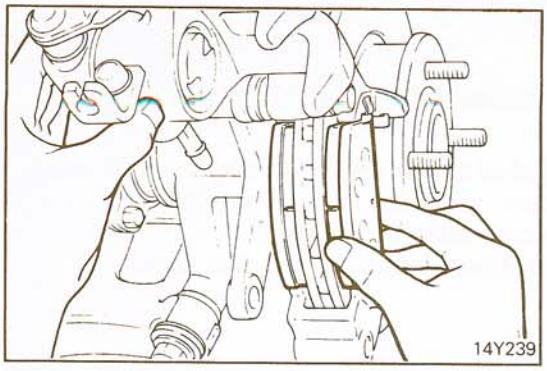

REAR

(1) Disconnect the parking brake cable.
(2) Remove the lock pin.

NOTE
The lock pin is coated with a special grease. Be careful avoid wiping off this grease or getting the lock pin dirty.

(3) Raise the caliper body and hold it in a raised position.
(4) Remove the pad clips, shim and pad assemblies from the caliper support.

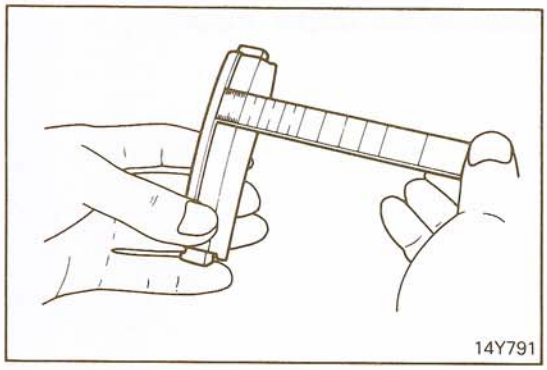

(5) Measure thickness of the pad assembly at a portion where wear is severest.
(6) If the pad assemblies are worn beyond the limit, replace them.

Limit: 1.0 mm (0.04 in.)

(7) Check pads for deformation, metal backing for damage, and oil on the linings.
Replace the pad assemblies if necessary.

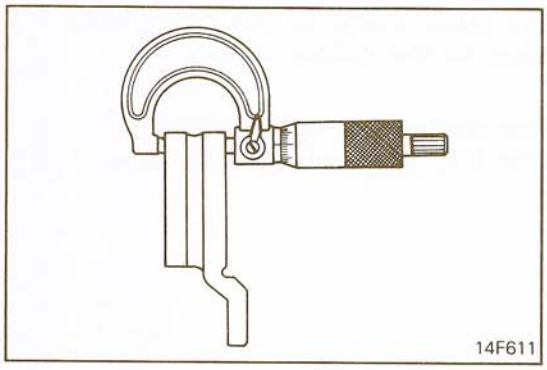

(8) Measure pad assembly sliding section of brake disc at four or more points.

Limit: 16.4 mm (0.65 in.)

(9) Replace the brake disc if the brake disc thickness is smaller than specified limit even at one point.

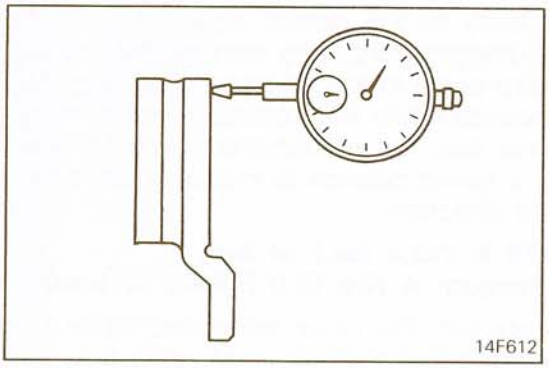

(10)Measure the brake disc runout at its peripheral end face.

Limit: 0.15 mm (0.006 in.)

(11)If the brake disc runout exceeds the limit, change its position on the hub and/or retorque evenly.
(12)Check the runout again. If it cannot be corrected, replace the brake disc. Do not resurface it.

NOTE
Before measurement of brake disc runout, check wheel bearing for play and correct if necessary. Also clean the disc surface to remove dirt and rust before runout measurement.

(13)To determine the dragging force of the pad, measure the rotational force of the hub with the pad removed.

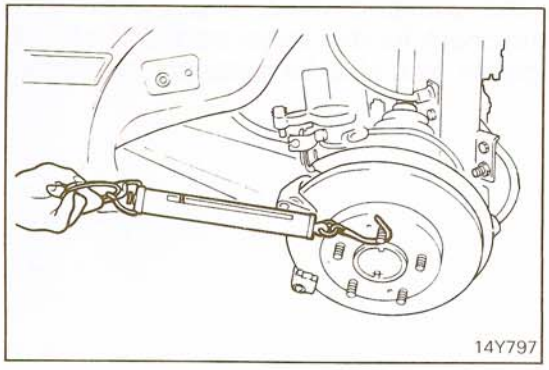

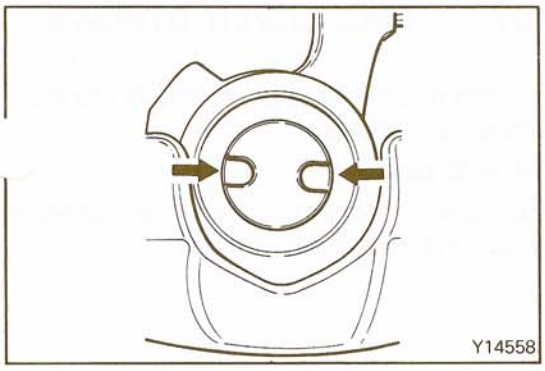

(14)Push the piston into the caliper body.

NOTE
At this point, set the piston stopper grooves, as shown by the arrow in the illustration, so that they will interlock with the projections on the rear of the pad assembly.

If the reservoir is full of brake fluid, pushing in of the piston will cause overflow of fluid from the reservoir. Drain somewhat, therefore, before operation.
Before setting, clean the piston.

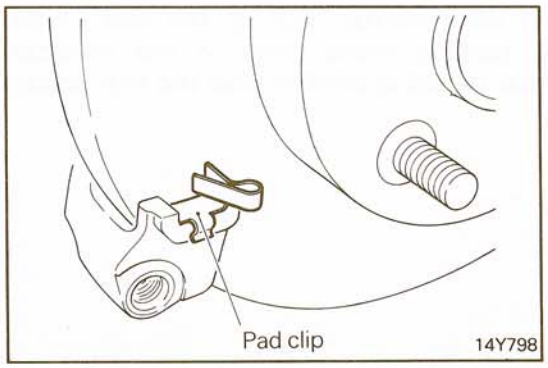

(15)Install the pad clip to the caliper support.

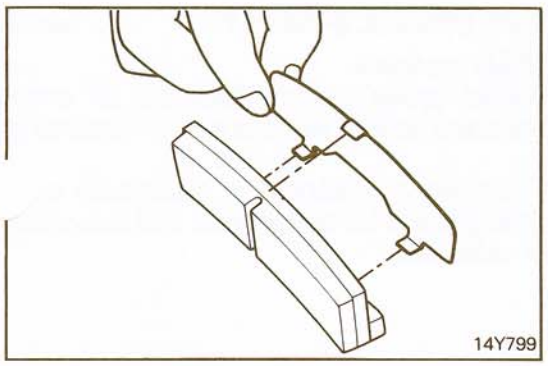

(16)Install with shim pawl engaged with the pad assembly as illustrated.
(17)Install the pad assemblies to the caliper support.

Caution
The pad assemblies should be replaced as sets (inner and outer) for both the left and right wheels at the same time.

(18)Lower the caliper body, and install the lower lock pin.

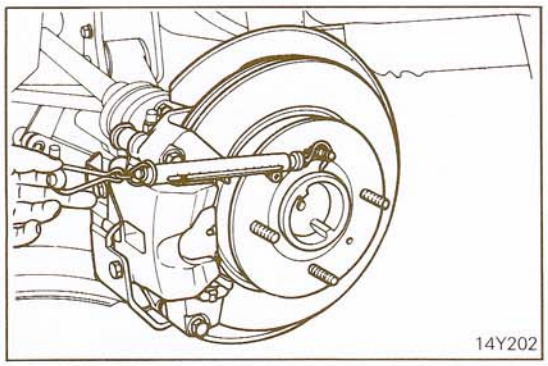

(19)Measure the brake drag by starting the engine, maintaining the brake pedal in the depressed position for approximately 5 seconds while the vehicle is not moving, and then rotating the disc ten revolutions in the forward direction and using a spring balance to measure the brake drag in the forward direction.

Standard value: 70 N (15.4 lbs.) or less
[Brake dragging torque 4 Nm (3.0 ft.lbs.) or less]

(20)If the difference between the measured value obtained while the brake pads are mounted and that obtained while they are removed exceeds the standard value, disassemble the piston, and check for dirt and/or corrosion on the sliding part of the piston, and also for deterioration of the piston seal.

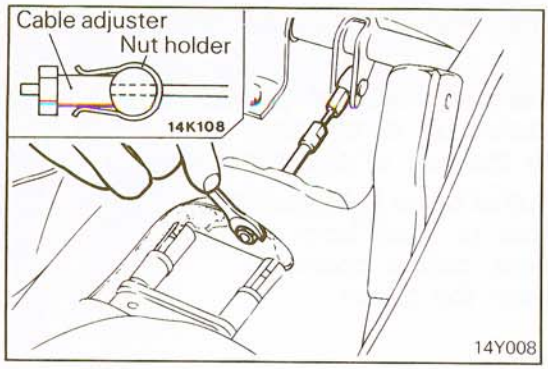

CHECKING PARKING BRAKE LEVER STROKE

N05FEAD

1. Pull the brake lever with a force of approx. 200 N (45 lbs.), and count the number of notches.

   Standard value: 4 – 5 clicks

2. If the parking brake lever stroke exceeds the standard value, adjust it by turning the cable adjuster.

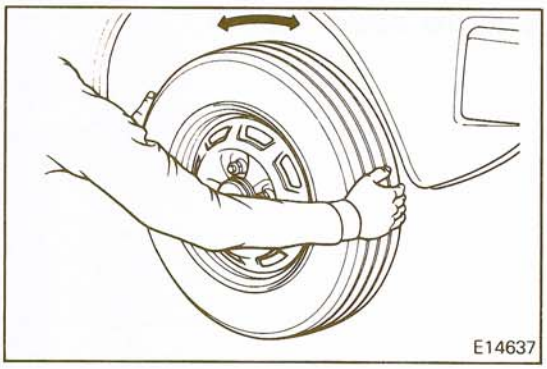

3. After adjusting the lever stroke, jack up the rear of the vehicle. With the parking brake lever in the released position, turn the rear wheel to confirm that the rear brakes are not dragging.

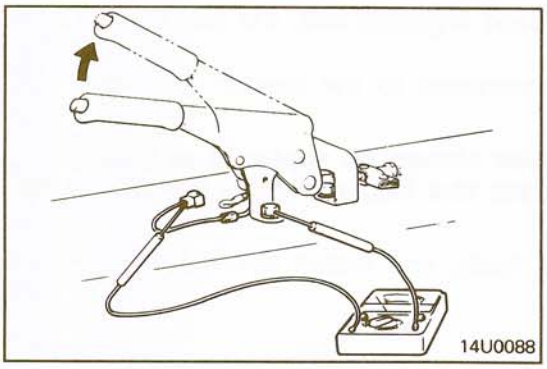

CHECKING PARKING BRAKE SWITCH

N05FDAD

1. Remove the rear floor console.
2. Disconnect the parking brake switch. Connect an ohmmeter to the parking brake switch and the switch mounting bolt.
3. The brake switch normally functions if it electrically conducts when the parking brake lever is pulled and becomes inconductive when released.

BRAKE PEDAL

N05GA- -

REMOVAL AND INSTALLATION

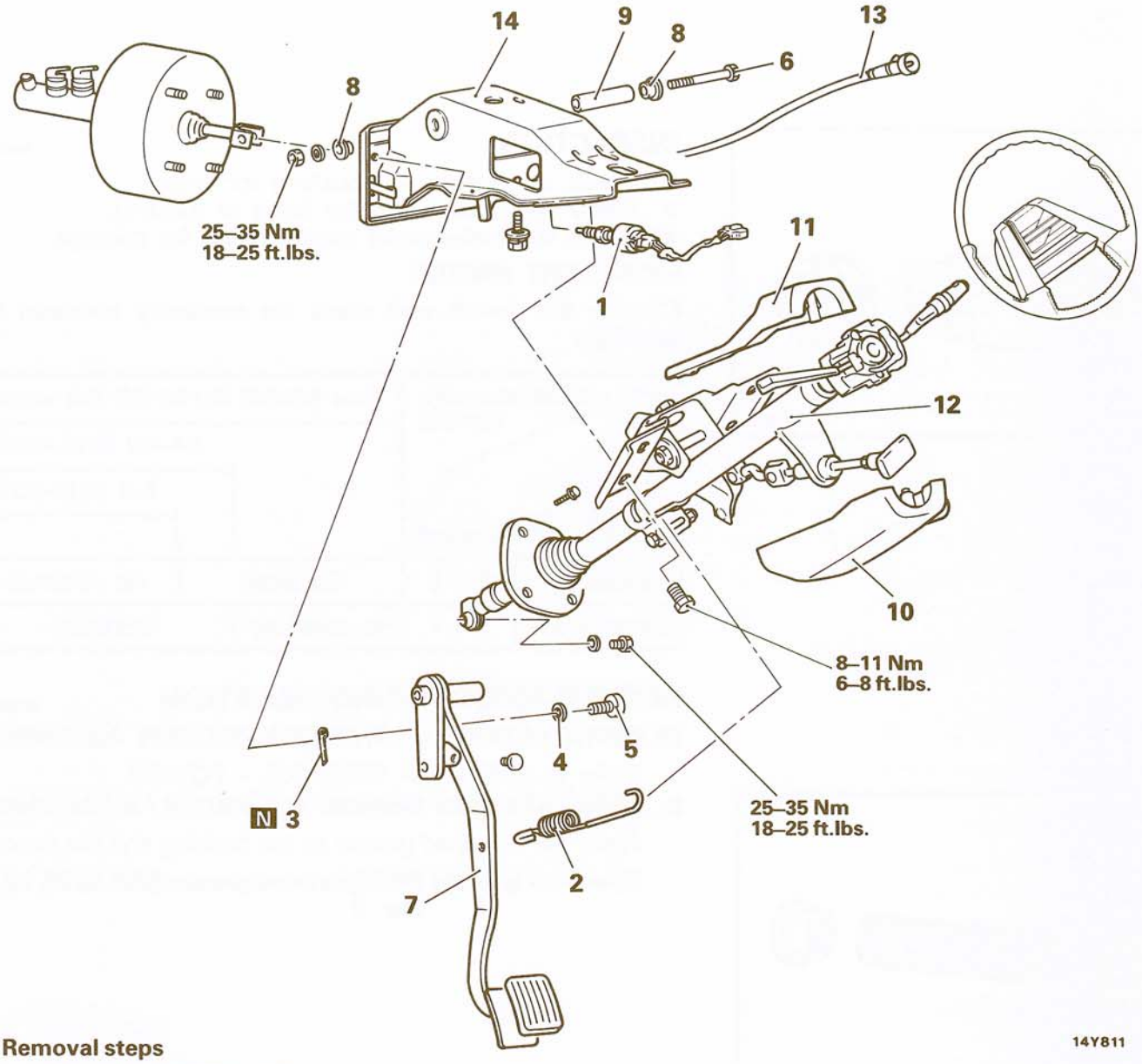

14Y811

Removal steps

- ◆◆ 1. Stop light switch
- ◆◆ 2. Return spring
- 3. Cotter pin
- ◆◆ 4. Washer
- ◆◆ 5. Clevis pin
- 6. Pedal attaching bolt
- 7. Brake pedal
- ◆◆ 8. Bushings
- ◆◆ 9. Spacer
- 10. Lower column cover
- 11. Upper column cover
- ◆◆ ◆◆ 12. Steering column assembly
- 13. Speedometer cable connection
- 14. Pedal support member

NOTE
(1) Reverse the removal procedures to reinstall.
(2) ◆◆: Refer to "Service Points of Removal".
(3) ◆◆: Refer to "Service Points of Installation".
(4) N: Non-reusable parts

SERVICE POINT OF REMOVAL N05GBAE

12. REMOVAL OF STEERING COLUMN ASSEMBLY

Refer to GROUP 19 STEERING – POWER.

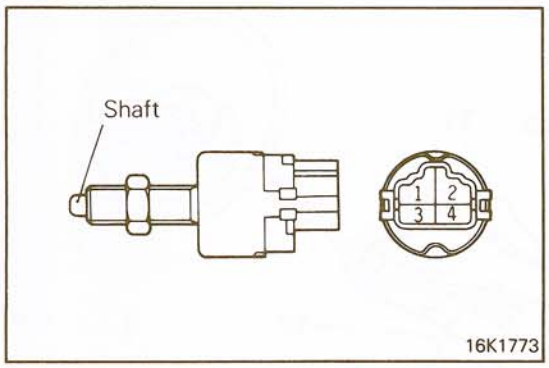

INSPECTION N05GCAF

- Check the spacer and bushing for wear.
- Check the brake pedal for bend or twisting.
- Check the brake pedal return spring for damage.

STOP LIGHT SWITCH

Operate the switch and check for continuity between the terminals.

Shaft dimension mm (in.) / Circuit	Terminal	Free 5.8–6.8 (0.23–0.27) Full stroke	3.4–5.0 (0.13–0.20)	3–5 (0.12–0.20)
Stop light	2 – 3	Continuity		No continuity
Speed control	1 – 4	No continuity	Continuity	

SERVICE POINTS OF INSTALLATION N05GDAM

12. INSTALLATION OF STEERING COLUMN ASSEMBLY

Refer to GROUP 19 STEERING – POWER.

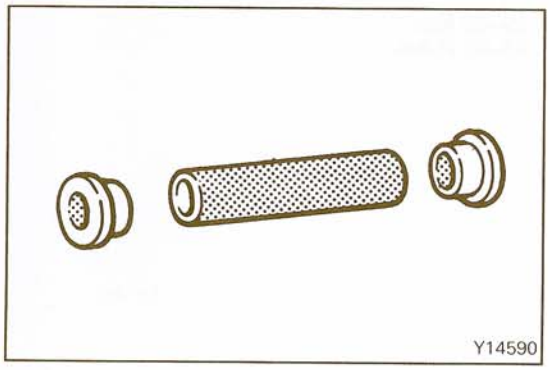

9. APPLICATION OF GREASE TO SPACER / 8. BUSHINGS

Apply the specified grease to the bushing and the spacer.

Specified grease: Multipurpose grease SAE J310, NLGI No. 3

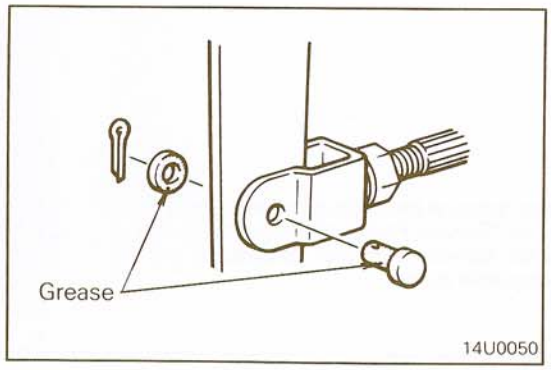

5. APPLICATION OF GREASE TO CLEVIS PIN / 4. WASHER

Apply specified grease to clevis pin and washer and insert a clevis pin and bend the cotter pin tightly.

Specified grease: Multipurpose grease SAE J310, NLGI No. 3

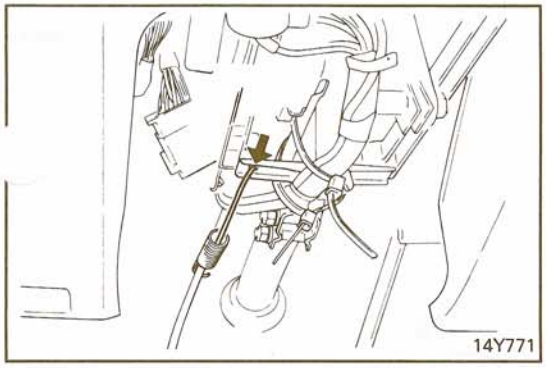

2. INSTALLATION OF RETURN SPRING

Install the return spring at illustrated position.

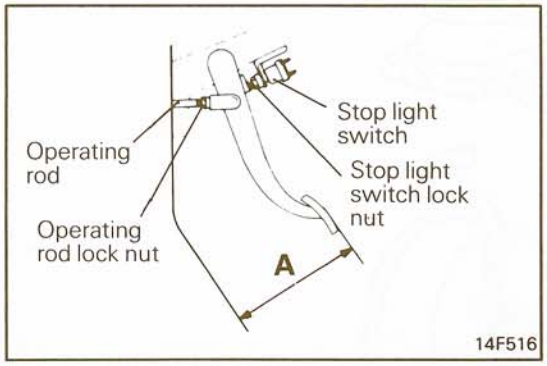

1. ADJUSTMENT OF STOP LIGHT SWITCH

(1) Temporarily install the stop light switch.
(2) Turn the operating rod until the brake pedal height becomes the standard value.

Standard value (A): 177 – 183 mm (7.0 – 7.2 in.)

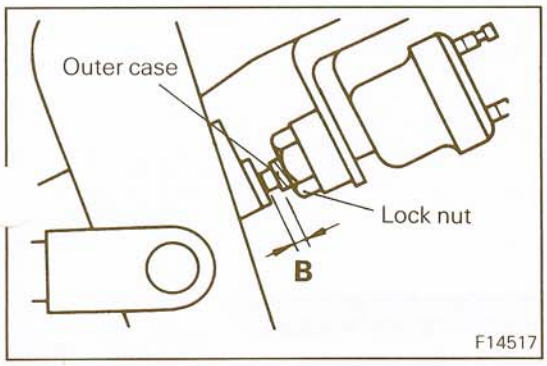

(3) Adjust the brake pedal to stop light switch outer case clearance to standard value.

Standard value (B): 0.5 – 1.0 mm (0.02 – 0.04 in.)

BRAKE MASTER CYLINDER

N05IA--

REMOVAL AND INSTALLATION

Pre-removal Operation
- Draining Brake Fluid

Post-installation Operation
- Refilling Brake Fluid
- Bleeding Brake Line (Refer to P.5-29.)

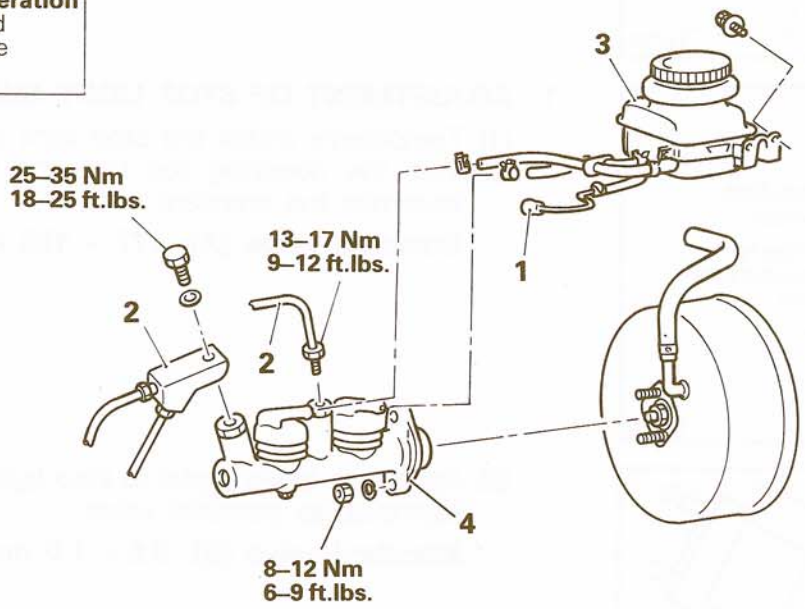

Removal steps

1. Brake fluid level sensor connection
2. Brake tube
3. Brake fluid reservoir assembly
- ◆◆ 4. Brake master cylinder assembly

NOTE
(1) Reverse the removal procedures to reinstall.
(2) ◆◆: Refer to "Service Points of Installation".

14Y772

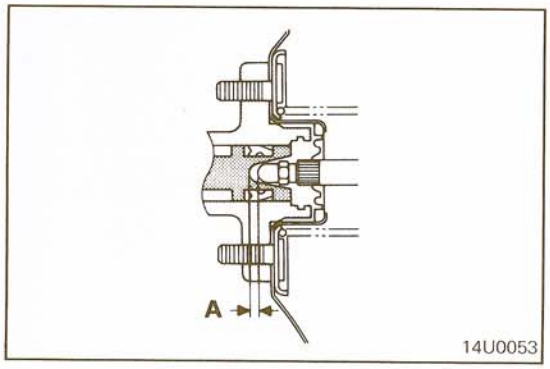

SERVICE POINTS OF INSTALLATION

N05IDAK

4. INSTALLATION OF BRAKE MASTER CYLINDER ASSEMBLY

Measure the clearance (A) between the brake booster push rod and the primary piston by using the following procedure:

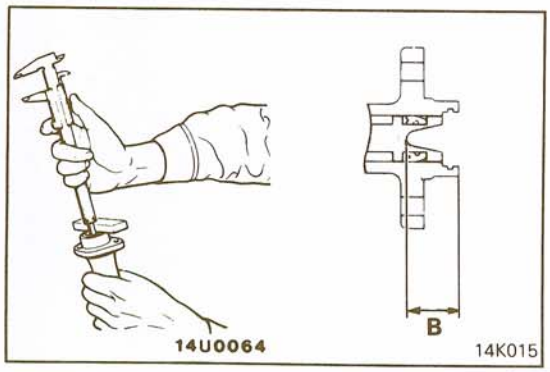

(1) Measure master cylinder end to piston dimension (B).

NOTE
Measure with a straightedge applied to the master cylinder end face and determine dimension (B) by subtracting the straightedge thickness from reading.

STB Revision

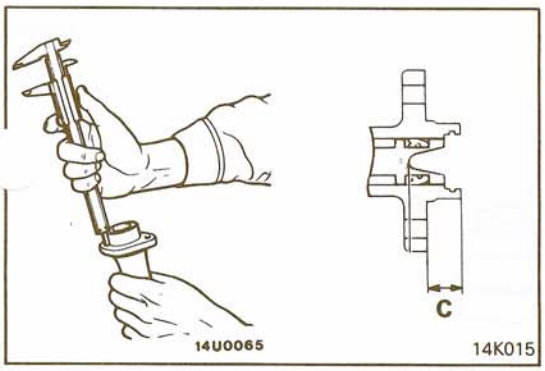

(2) Measure master cylinder's brake booster mounting surface to end face dimension (C).

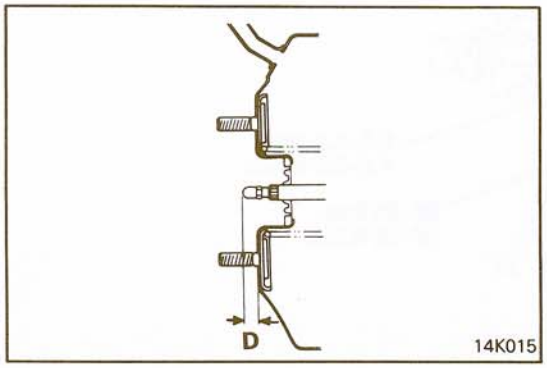

(3) Measure brake booster's master cylinder mounting surface to push rod end dimension (D).
(4) From values obtained in (1), (2) and (3), determine brake booster push rod to primary piston clearance (A).

Standard value: 0.7 – 1.1 mm (0.028 – 0.043 in.) [A = B – C – D]

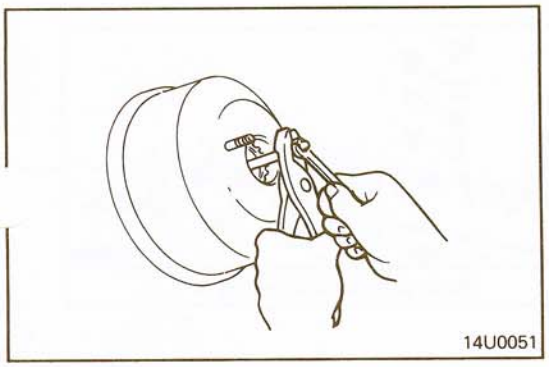

(5) If the clearance is not within the standard value range, adjust by changing the push rod length by turning the screw of the push rod.

Caution
Insufficient clearance may cause excessive brake drag.

DISASSEMBLY AND REASSEMBLY

N05HAAB

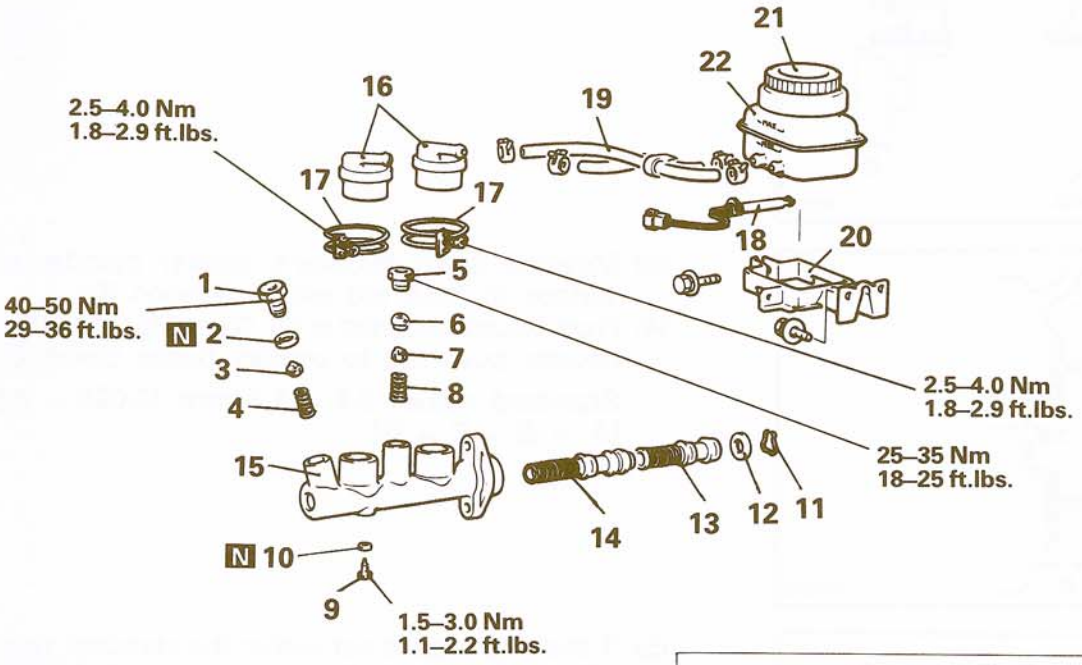

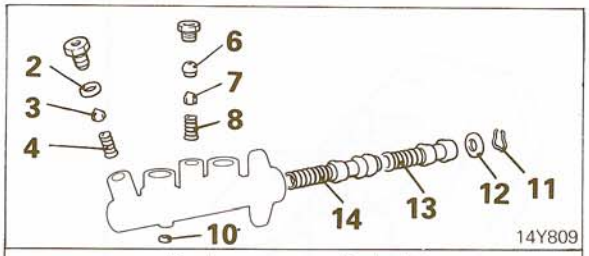

Brake master cylinder kit

Brake master cylinder disassembly steps

1. Check valve case
2. Gasket
3. Check valve
4. Check valve spring
5. Check valve cap
6. Tube seat
7. Check valve
8. Check valve spring
9. ◆◆ Secondary piston stopper
10. Gasket
11. ◆◆ Piston stopper ring
12. Piston stopper plate
13. ◆◆ ◆◆ Primary piston
14. ◆◆ ◆◆ Secondary piston
15. ◆◆ Brake master cylinder body

Brake fluid reservoir disassembly steps

16. ◆◆ Nipple
17. Reservoir band
18. Brake fluid level sensor switch
19. Reservoir hoses
20. Reservoir bracket
21. Reservoir cap
22. Reservoir tank

NOTE
(1) Reverse the disassembly procedures to reassemble.
(2) ◆◆: Refer to "Service Points of Disassembly".
(3) ◆◆: Refer to "Service Points of Reassembly".
(4) N: Non-reusable parts

14Y561

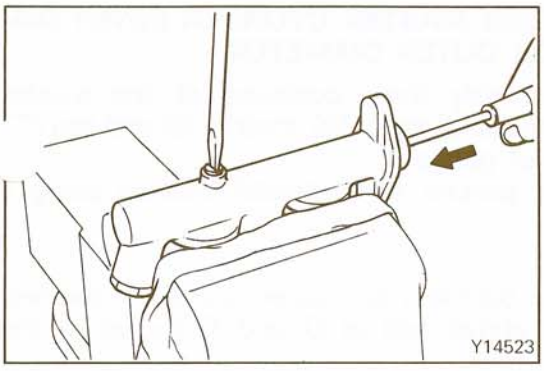

SERVICE POINTS OF DISASSEMBLY N05HBAB

9. REMOVAL OF SECONDARY PISTON STOPPER

Remove the secondary piston stopper while pushing the piston.

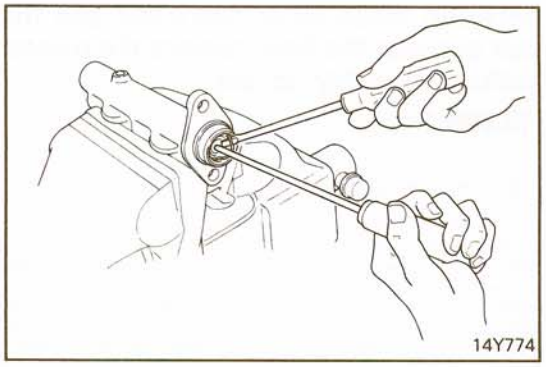

11. REMOVAL OF PISTON STOPPER RING

Remove the piston stopper ring while pushig the piston.

13. CAUTION OF PRIMARY PISTON

Caution
Do not disassemble the primary pistons.

14. REMOVAL OF SECONDARY PISTON

NOTE
If the secondary piston is hard to remove, slowly apply compressed air from the secondary side outlet port of the master cylinder.

Caution
Do not disassemble the secondary piston.

16. REMOVAL OF NIPPLE

When removing the nipple, lift it straight up.

INSPECTION N05HDAA

- Check the check valve and check valve spring for weakness.
- Check the gasket and tube seat for damage.
- Check the master cylinder body for rust and scars of inner surface.
- Check the primary and secondary pistons for rust, scars, wear and deformation.
- Check the piston cup for damage.
- Check the primary and secondary pistons for weakness of springs.

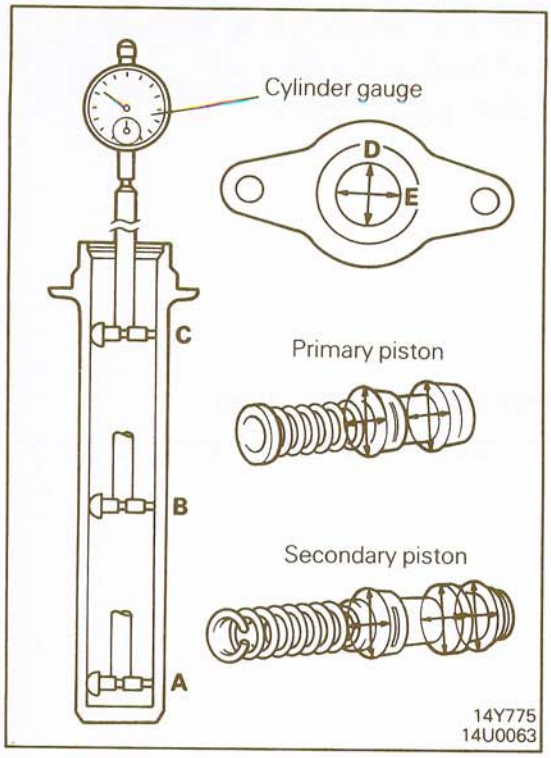

CLEARANCE BETWEEN MASTER CYLINDER INNER DIAMETER AND PISTON OUTER DIAMETER

(1) Measure approximately three positions of the master cylinder inner diameter [bottom (A), middle (B) and top (C)] by using a cylinder gauge.

(2) Measure O.D. of pistons at illustrated location using a micrometer.

NOTE
Measure the inner diameter of master cylinder at the two places described above and at D and E shown in the illustration.

(3) If the difference between these inner diameters and the piston outer diameter exceeds the limit, replace the master cylinder and the piston assembly as set.

Limit: 0.15 mm (0.006 in.)

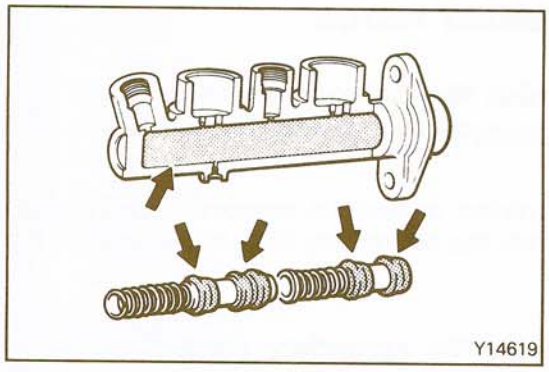

SERVICE POINTS OF REASSEMBLY

N05HCAC

15. APPLICATION OF BRAKE MASTER CYLINDER BODY TO BRAKE FLUID / 14. SECONDARY PISTON / 13. PRIMARY PISTON

Apply the specified brake fluid sufficiently to the inner surface of the master cylinder body and to the entire periphery of the secondary and primary pistons.

Specified brake fluid: DOT 3

BRAKE BOOSTER

N05JA--

REMOVAL AND INSTALLATION

Pre-removal Operation	Post-installation Operation
• Draining Brake Fluid	• Refilling Brake Fluid • Bleeding Brake Line (Refer to P.5-29.)

Vehicles with a rear brake lock-up control system

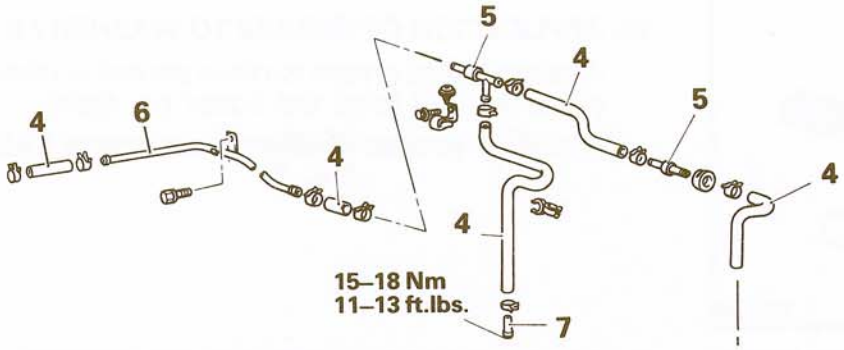

Vehicles without a rear brake lock-up control system

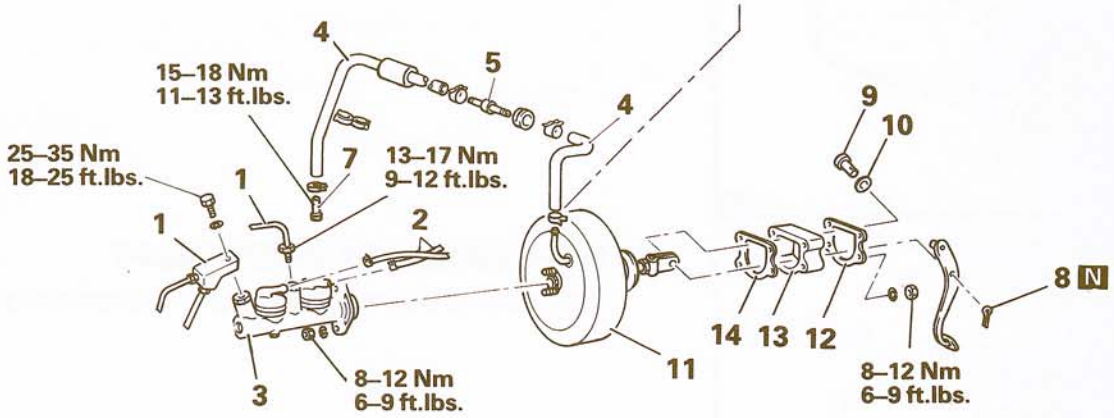

Removal steps

1. Brake tube
2. Reservoir hose
3. ◆◆ Brake master cylinder
4. ◆◆ Vacuum hose
5. ◆◆ Check valve
6. Vacuum pipe
7. ◆◆ Fitting
8. Cotter pin
9. ◆◆ Clevis pin
10. ◆◆ Washer
11. Brake booster
12. Sealer
13. Spacer
14. Sealer

NOTE
(1) Reverse the removal procedures to reinstall.
(2) ◆◆: Refer to "Service Points of Installation".
(3) N: Non-reusable parts

14Y776

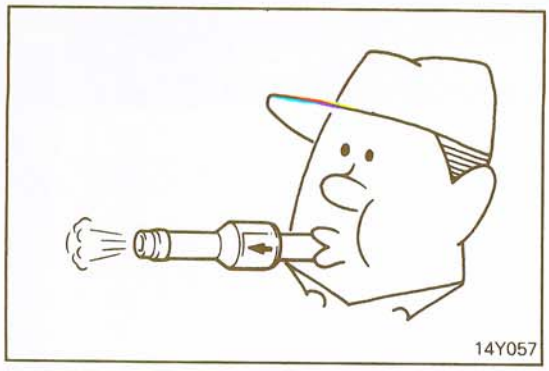

INSPECTION

N05JCAD

Check the check valve operation as follows.

- Blow into the check valve. If the air passes through when you blow from the booster side, but not when you blo from the engine side, the check valve is functioni properly.

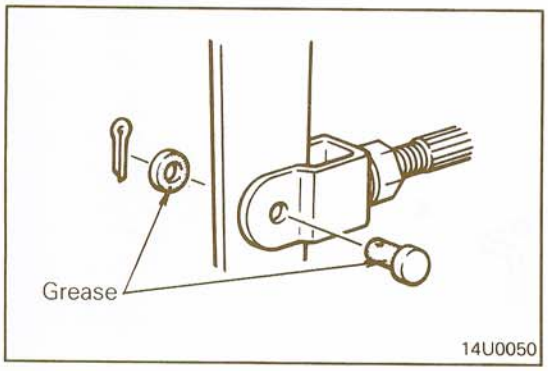

SERVICE POINTS OF INSTALLATION

N05JDAL

10. APPLICATION OF GREASE TO WASHER / 9. CLEVIS PIN

Apply specified grease to clevis pin and washer. Then insert clevis pin and bend the cotter pin tightly.

Specified grease: Multipurpose grease SAE J310, NLGI No. 3

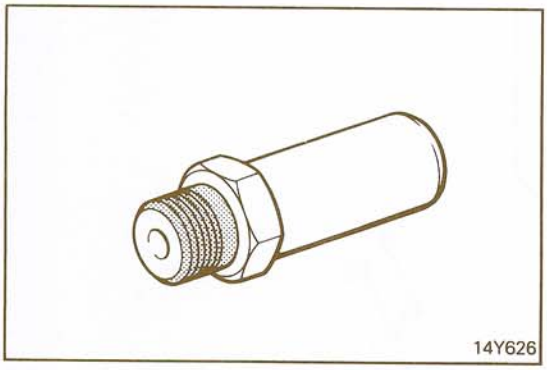

7. APPLICATION OF SEALANT TO FITTING

When installing the fitting, apply the semi-drying sealant to its threaded portion.

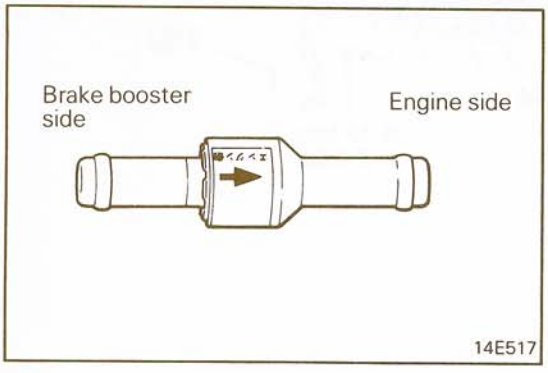

5. INSTALLATION OF CHECK VALVE

Install the check valve, noting the direction of installation.

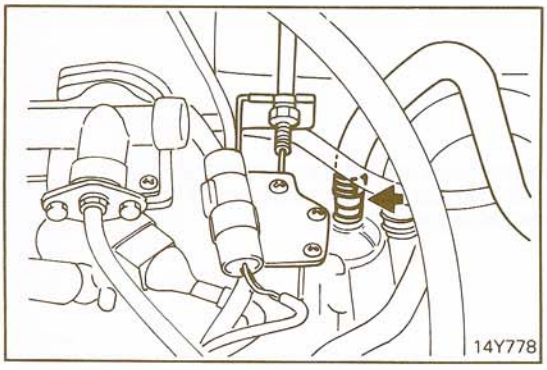

4. INSTALLATION OF VACUUM HOSE

Fasten the vacuum hose securely to prevent air leaks from the connections.

NOTE
Insert the vacuum hose until it is seated on the fitting flange.

3. INSTALLATION OF BRAKE MASTER CYLINDER

Check the booster push rod to brake master cylinder piston clearance.

Standard value: 0.7 – 1.1 mm (0.028 – 0.043 in.)

STB Revision

BRAKE LINE

N05KA--

REMOVAL AND INSTALLATION

Pre-removal Operation
- Draining Brake Fluid

Post-installation Operation
- Refilling Brake Fluid
- Bleeding Brake Line (Refer to P.5-29.)

Vehicles with a rear brake lock-up control system

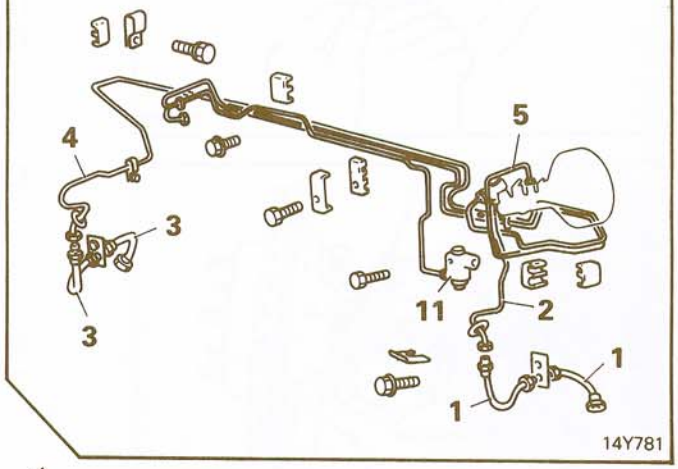

14Y781

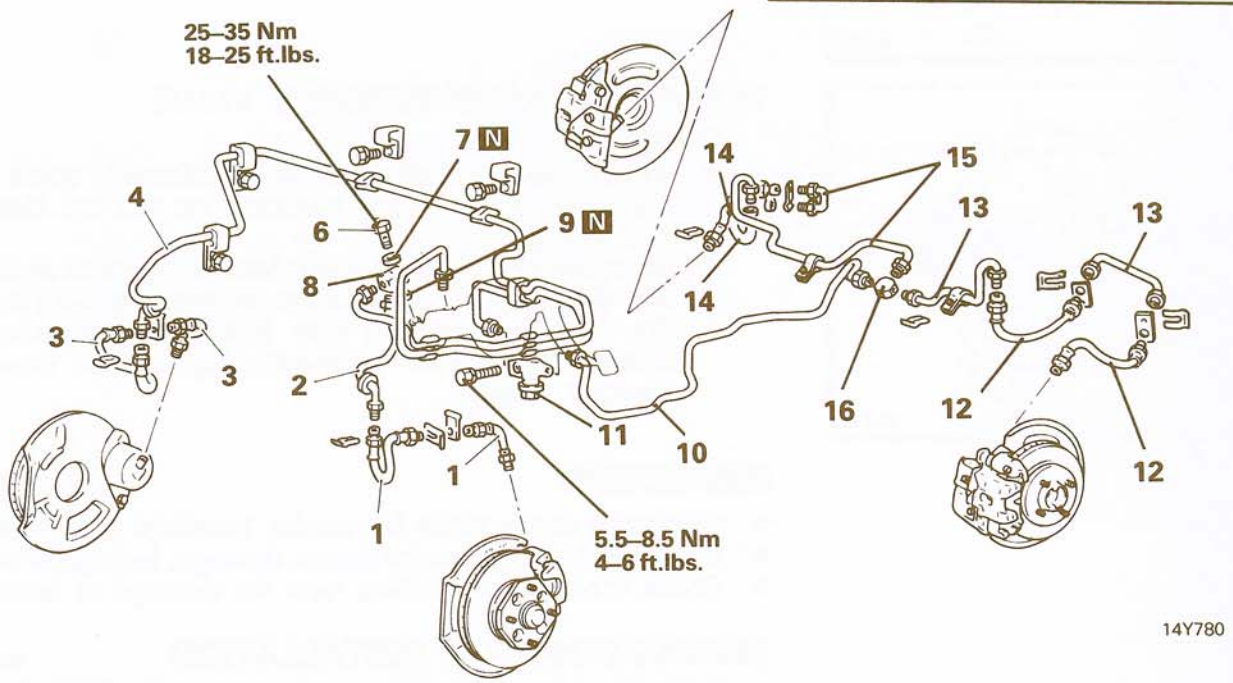

14Y780

1. Front brake hoses (L.H.)
2. Front brake tube (L.H.)
3. Front brake hoses (R.H.)
4. Front brake tube (R.H.)
5. Front brake tube
6. Connector attaching bolt
7. Gasket
8. Connector
9. Gasket
10. Pipe
11. Proportioning valve
12. Rear brake hoses (L.H.)
13. Rear brake tube (L.H.)
14. Rear brake hoses (R.H.)
15. Rear brake tube (R.H.)
16. 3-way connector

NOTE
(1) Brake hose flare nut tightening torque is 13 – 17 Nm (9 – 12 ft.lbs.).
(2) ◀▶: Refer to "Service Points of Removal".
(3) ▶◀: Refer to "Service Points of Installation".
(4) N: Non-reusable parts

STB Revision

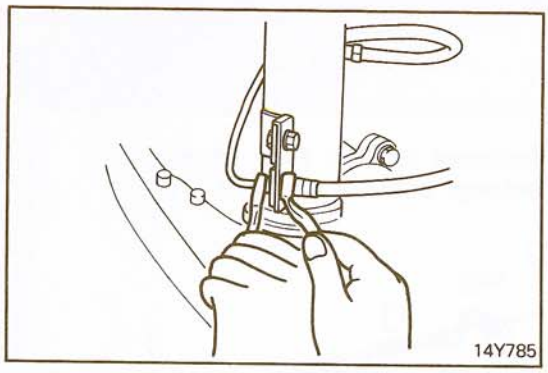

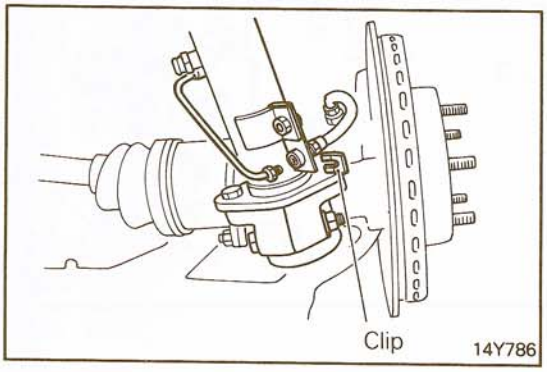

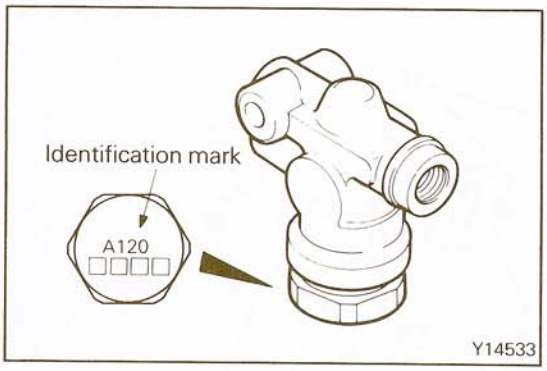

SERVICE POINTS OF REMOVAL N05KBAG

1. REMOVAL OF FRONT BRAKE HOSES (L.H.) / 3. FRONT BRAKE HOSES (R.H.) / 12. REAR BRAKE HOSES (L.H.) / 14. REAR BRAKE HOSES (R.H.)

For disconnection of brake tube and brake hose, proceed as follows:

(1) Drain brake fluid from the bleeder plug of each brake.
(2) While holding the nut on the brake hose side, loosen the brake tube flare nut.
(3) Pull out the brake hose clip and remove the brake hose from the bracket.

11. CAUTION OF PROPORTIONING VALVE

Caution

1. **Do not disassemble the proportioning valve because its performance depends on the set load of the spring.**
2. **On vehicles with rear brake lock-up control system use the proportioning valve bearing marked A123. On vehicles without rear brake lock-up control system, use the proportioning valve bearing marked A120.**

INSPECTION N05KCAD

- Check the brake tubes for cracks, breakage or corrosion.
- Check the brake hoses for cracks, damage, leakage or ooze.
- Check the brake tube flare nuts for damage or leakage.

SERVICE POINTS OF INSTALLATION N05KDAE

14. INSTALLATION OF REAR BRAKE HOSES (R.H.) / 12. REAR BRAKE HOSES (L.H.) / 3. FRONT BRAKE HOSES (R.H.) / 1. FRONT BRAKE HOSES (L.H.)

Install the brake hoses without twisting them.

NOTE

Make sure that the hoses are not in contact with the edge, welding beads or moving parts.

FRONT DISC BRAKES

N05LA--

REMOVAL AND INSTALLATION

Pre-removal Operation
- Draining Brake Fluid

Post-installation Operation
- Refilling Brake Fluid
- Bleeding Brake Line (Refer to P.5-29.)

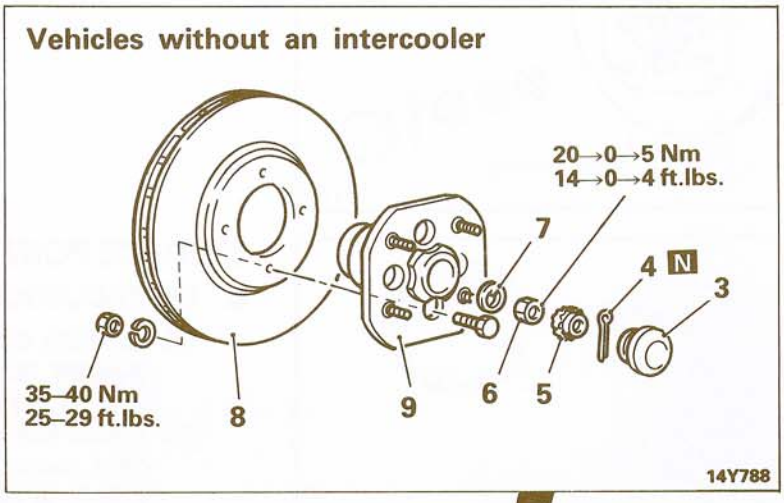

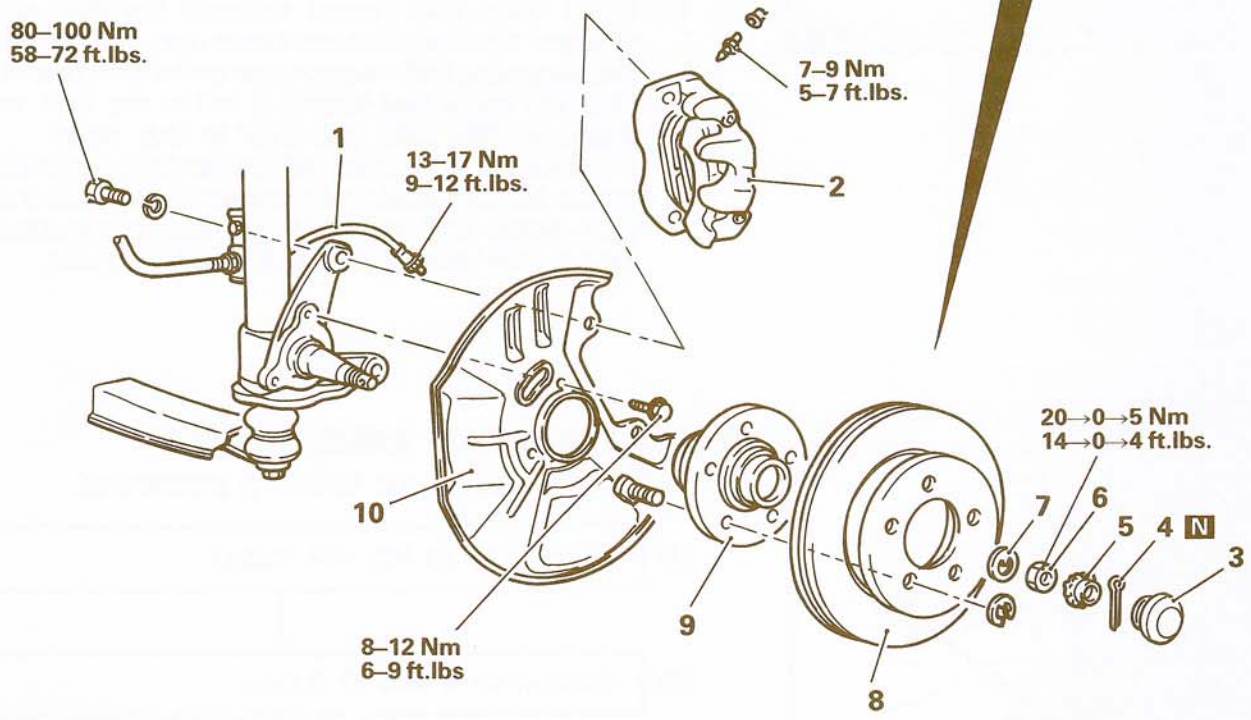

Removal steps

- ◆◆ 1. Brake hose
- 2. Front brake assembly
- 3. Hub cap
- ◆◆ 4. Cotter pin
- ◆◆ 5. Lock cap
- ◆◆ Adjustment of wheel bearing
- 6. Nut
- 7. Washer
- ◆◆ 8. Brake disc
- ◆◆ 9. Front axle hub
- 10. Dust cover

NOTE
(1) Reverse the removal procedures to reinstall.
(2) ◆◆: Refer to "Service Points of Removal".
(3) ◆◆: Refer to "Service Points of Installation".
(4) N: Non-reusable parts

11Y787

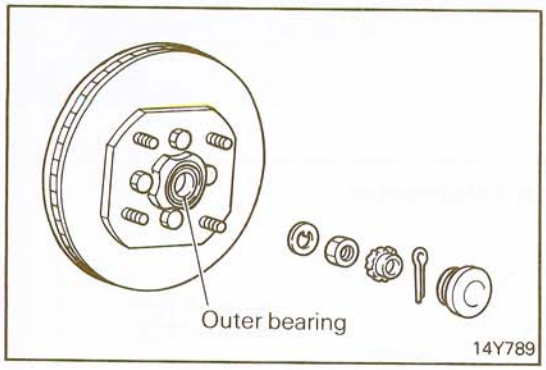

SERVICE POINT OF REMOVAL N05LBCB

9. REMOVAL OF FRONT AXLE HUB

Do not drop the outer bearing when removing the hub.

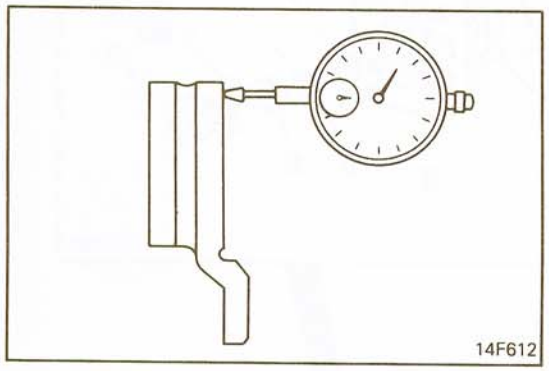

SERVICE POINT OF INSTALLATION N05LDCC

8. INSTALLATION OF BRAKE DISC

(1) Confirm that there is no rust or foreign matter on the contact surfaces of the brake disc and the front hub before installation.
(2) Install the front hub assembly and measure the brake disc runout with a dial indicator.

Limit: 0.15 mm (0.006 in.)

(3) If the brake disc runout exceeds the limit, shift the phase of the front hub and brake disc, reinstall the front hub assembly and measure the brake disc runout again.
(4) Until the brake disc runout is within the limit, shift the phase by 90°, 180° and 270° in that order.
(5) If the brake disc runout within the limit is not obtained by the above-mentioned procedure, measure the brake disc runout and the front hub runout separately and replace the part showing the larger runout.

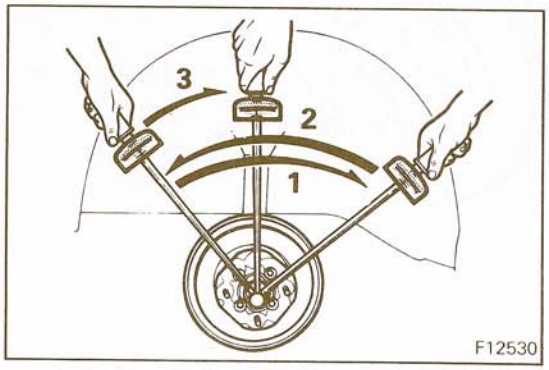

• ADJUSTMENT OF WHEEL BEARING

Tighten the nut by the following procedures.

(1) Tighten to 20 Nm (14 ft.lbs.)
↓
(2) Loosen to 0 Nm (0 ft.lbs.)
↓
(3) Retighten to 5 Nm (4 ft.lbs.)

5. INSTALLATION OF LOCK CAP / 4. COTTER PIN

Fit the lock cap and cotter pin. If the position of the cotter pin is not matched with the holes of the lock cap, back off the nut by 15° at maximum.

1. INSTALLATION OF BRAKE HOSE

After the brake hose is installed, make the following operation.
(1) Bleed the hydraulic system.
(2) Check the brake dragging torque. (Refer to P.5-31.)

STB Revision

DISASSEMBLY AND REASSEMBLY

N05LE--

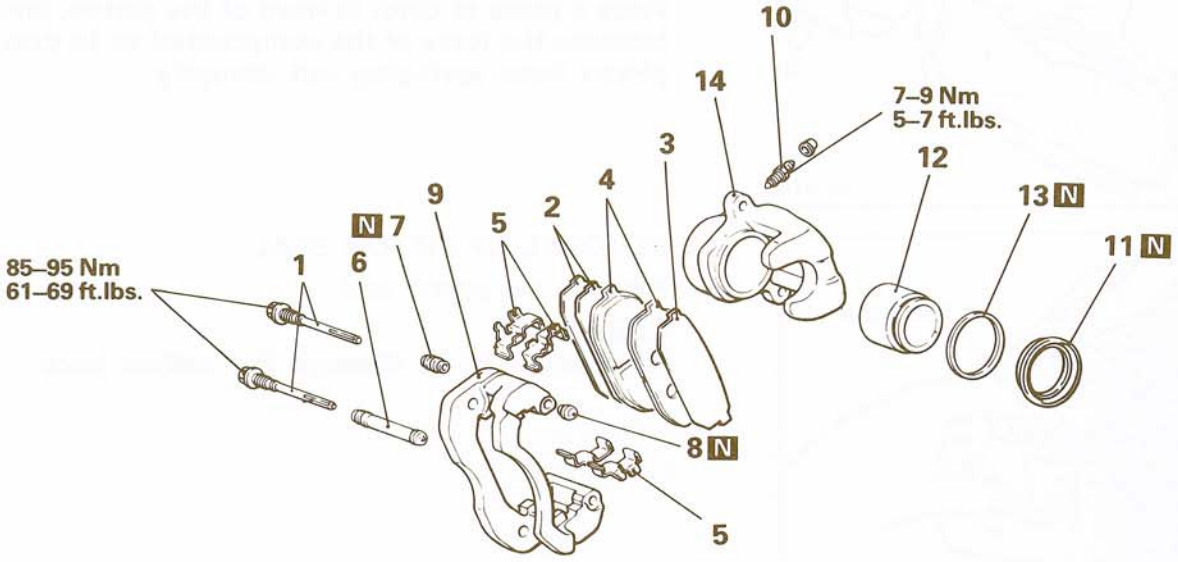

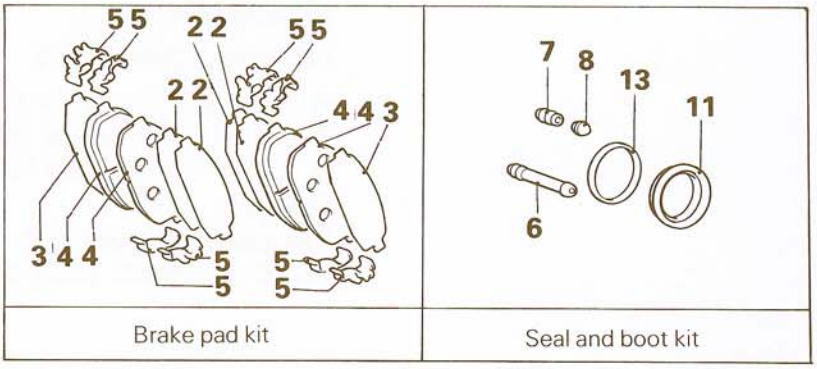

Brake pad kit	Seal and boot kit

Disassembly steps

- ◆◆ 1. Slide pin
- 2. Inner shim
- 3. Outer shim
- 4. Pad assembly
- 5. Pad retainer
- ◆◆ ◆◆ 6. Bushing
- ◆◆ 7. Pin boot
- ◆◆ 8. Cap
- 9. Caliper support
- 10. Bleeder screw
- ◆◆ 11. Dust cover
- ◆◆ ◆◆ 12. Piston
- ◆◆ ◆◆ 13. Piston seal
- 14. Caliper body

NOTE
(1) Reverse the disassembly procedures to reassemble.
(2) ◆◆: Refer to "Service Points of Disassembly".
(3) ◆◆: Refer to "Service Points of Reassembly".
(4) N: Non-reusable parts

14Y313

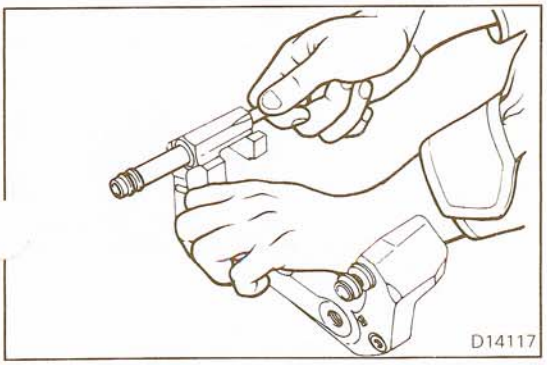

SERVICE POINTS OF DISASSEMBLY

N05LFCA

6. REMOVAL OF BUSHING

Push out the bushing from the caliper support by using the slide pin.

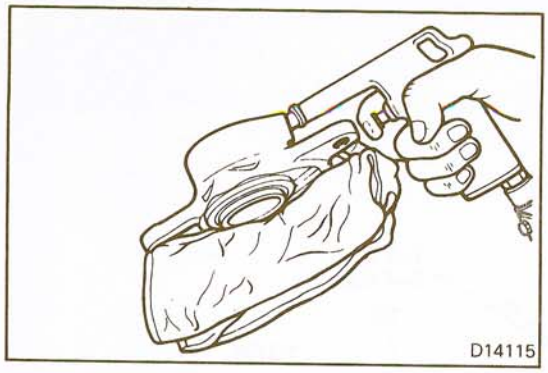

12. REMOVAL OF PISTON

Remove the piston by applying compressed air through the brake hose fitting hole.

Caution
Place a piece of cloth in front of the piston, and slowly increase the force of the compressed air to prevent the piston from springing out abruptly.

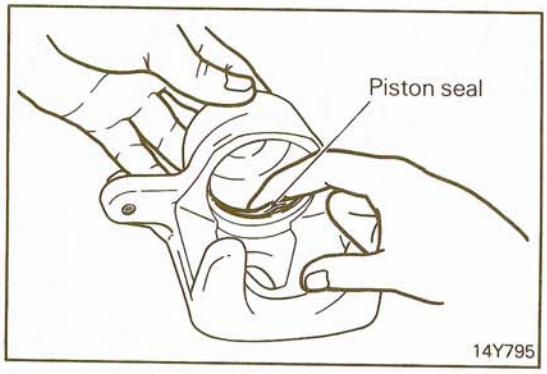

13. REMOVAL OF PISTON SEAL

Remove the piston seal.

Caution
Be careful not to damage the caliper bore.

INSPECTION

N05LGCA

CALIPER ASSEMBLY

- Check the caliper support for cracks.
- Check the caliper body for cracks and cylinder for rust.
- Check the piston for rust.

Caution
The bushing, pin boot, cap, dust boot and piston seal must all be replaced with new parts.

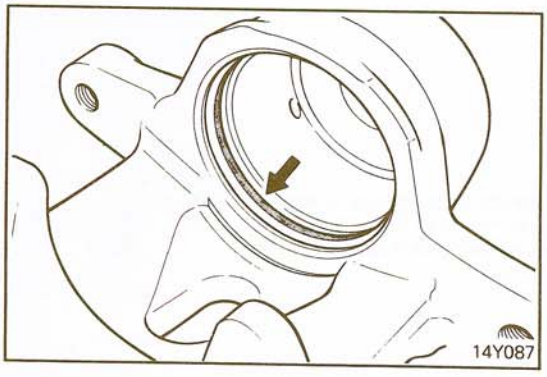

SERVICE POINTS OF REASSEMBLY

N05LHCB

13. APPLICATION OF GREASE TO PISTON SEAL

(1) Apply the specified brake fluid to the cylinder walls.
Specified brake fluid: DOT 3

(2) Fit a new piston seal into the cylinder.
NOTE
The piston seal in the repair kit is coated with special grease. Be careful not to wipe off this grease.

(3) Apply the specified grease to the lip of the cylinder.
Specified grease: Repair kit grease (pink)

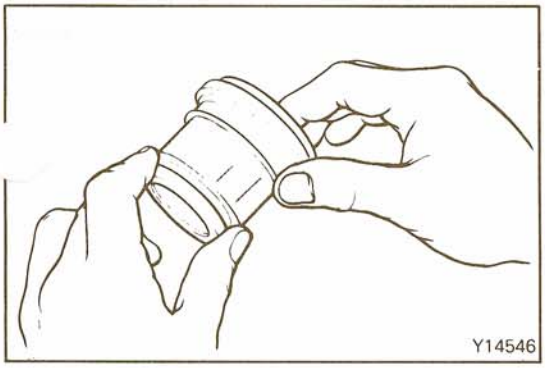

12. INSTALLATION OF PISTON / 11. DUST COVER

(1) Apply the specified brake fluid to the external surface of the piston.

Specified brake fluid: DOT 3

(2) Install a new dust boot onto the piston end as shown in the illustration.

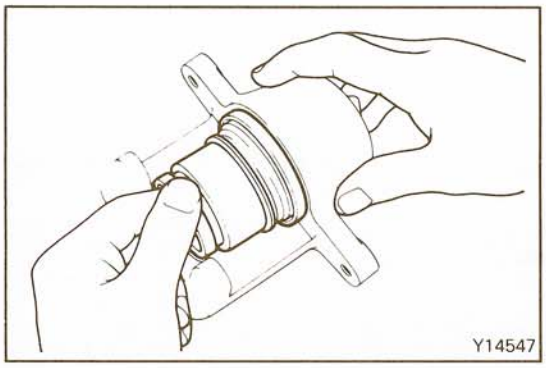

(3) Fit the forward end of the dust boot into the caliper body groove and gently insert the piston into the cylinder by hand.

NOTE
Take care not to twist the piston.

(4) Make certain that the end of the dust boot is fitted into the piston groove.

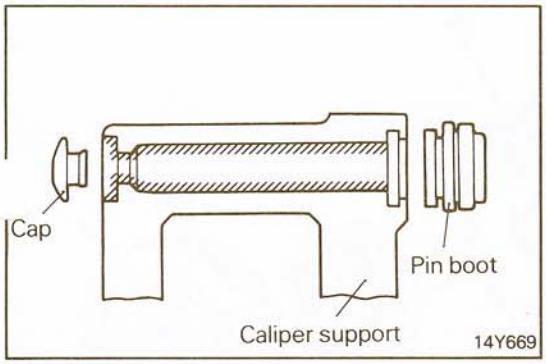

8. APPLICATION OF GREASE TO CAP / 7. PIN BOOT

Apply the specified grease to the contact surface of the slide pin, the seat surface of the cap of the caliper support, and the inside surface of the pin boot.

Specified grease: Repair kit grease (pink)

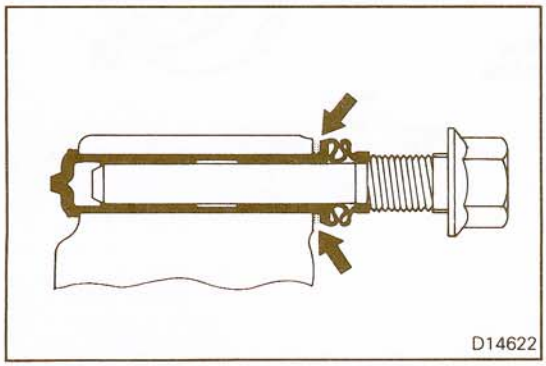

6. APPLICATION OF GREASE TO BUSHING

(1) Apply the specified grease to the inside surface of the bushing.

Specified grease: Repair kit grease (pink)

(2) Apply the specified adhesive furnished in the repair kit to the lip of a new bushing, and insert the bushing into the caliper support by using the slide pin.

Specified adhesive: Repair kit adhesive

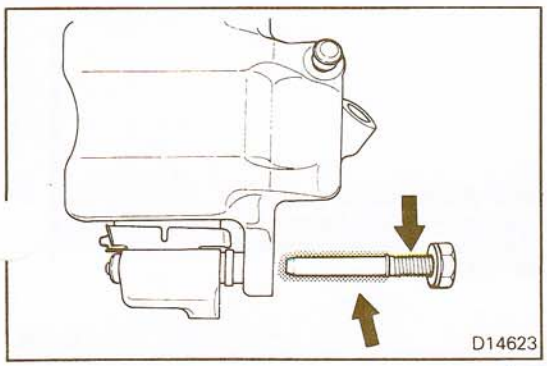

1. APPLICATION OF GREASE TO SLIDE PIN

(1) Apply the specified brake fluid to the threaded portion of the slide pin.

Specified brake fluid: DOT 3

(2) Apply a thin coat of the specified grease to the slide pin, and then install the caliper body to the caliper support.

Specified grease: Repair kit grease (pink)

REAR DISC BRAKES

N05MA- -

REMOVAL AND INSTALLATION

Pre-removal Operation
- Draining Brake Fluid

Post-installation Operation
- Refilling Brake Fluid
- Bleeding Brake Line (Refer to P.5-29.)

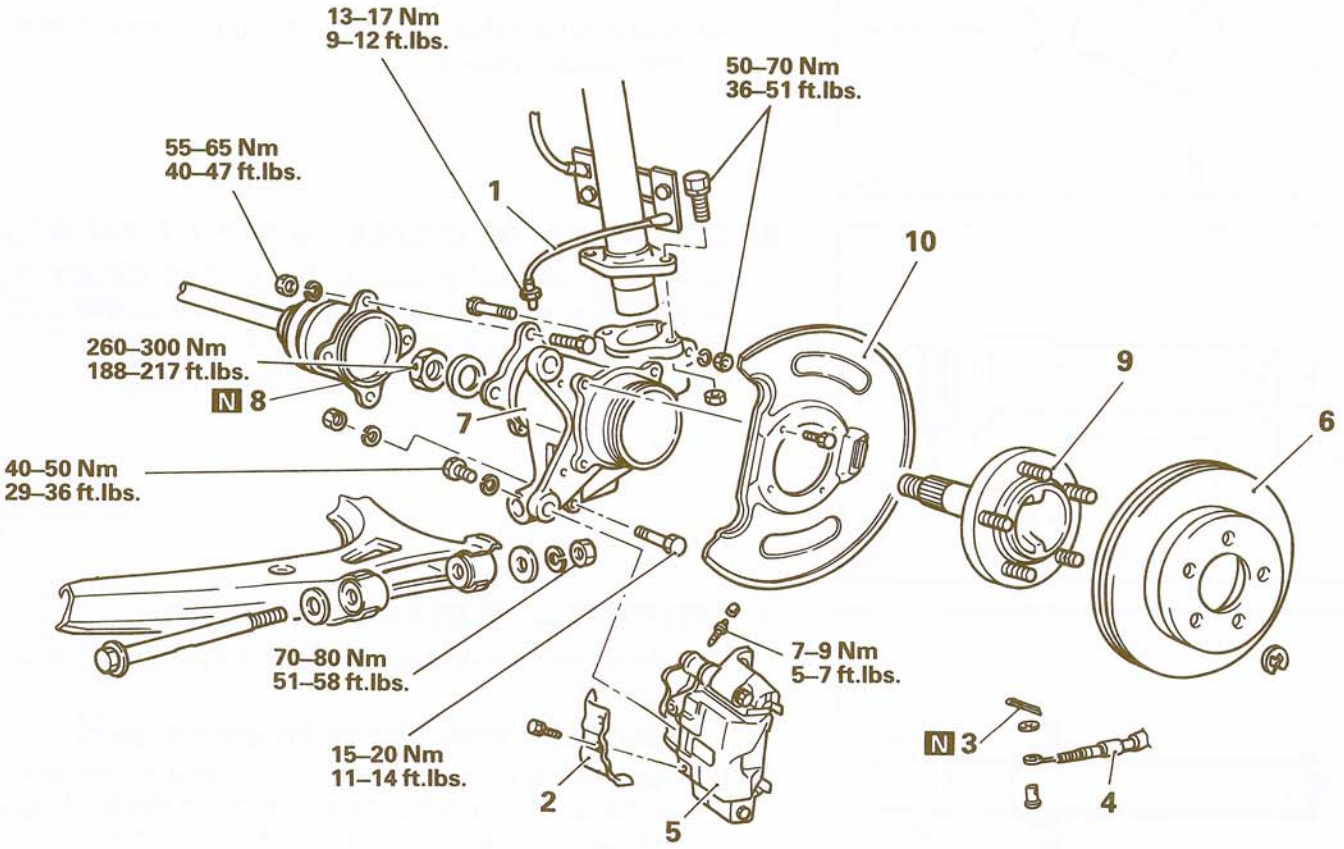

Removal steps

- ◆◆ 1. Brake hose
- 2. Dust cover
- 3. Cotter pin
- ◆◆ 4. Parking brake cable
- 5. Rear brake assembly
- ◆◆ 6. Brake disc
- ◆◆ ◆◆ 7. Axle housing
- ◆◆ ◆◆ 8. Nut
- ◆◆ ◆◆ 9. Axle shaft
- 10. Dust cover

NOTE
(1) Reverse the removal procedures to reinstall.
(2) ◆◆: Refer to "Service Points of Removal".
(3) ◆◆: Refer to "Service Points of Installation"
(4) N: Non-reusable parts

14Y796

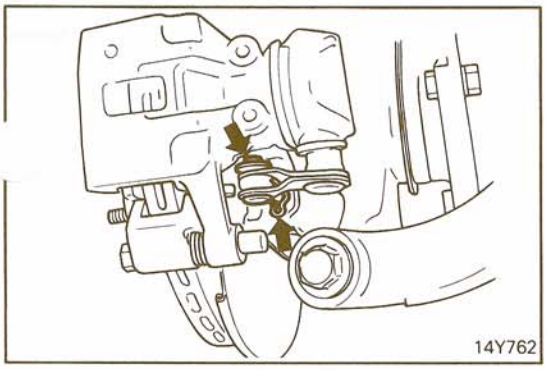

SERVICE POINTS OF REMOVAL N05MBAB

4. REMOVAL OF PARKING BRAKE CABLE

Disconnect the parking brake cable from the rear brake assembly.

7. REMOVAL OF AXLE HOUSING / 8. NUT / 9. AXLE SHAFT

Refer to GROUP 3 REAR AXLE – Axle Shaft.

SERVICE POINTS OF INSTALLATION N05MCAB

9. INSTALLATION OF AXLE SHAFT / 8. NUT / 7. AXLE HOUSING

Refer to GROUP 3 REAR AXLE – Axle Shaft.

6. INSTALLATION OF BRAKE DISC

(1) Install the brake disc and measure the brake disc runout with a dial indicator. (Refer to P.5-32.)
(2) If the brake disc runout exceeds the limit, shift the phase of the axle shaft and brake disc, reinstall the brake disc and measure the brake disc runout again. Shift the phase to 90°, 180° and 270°, in that order, until the brake disc runout is within the limit.
(3) If the brake disc runout within the limit is not obtained by the above-mentioned procedure, measure the brake disc runout and the axle shaft runout separately and replace the part showing the larger runout.

1. INSTALLATION OF BRAKE HOSE

After installation of the brake hose, perform the following operations.

(1) Bleed the hydraulic system.
(2) Check the brake dragging torque. (Refer to P.5-33.)

REAR DISC BRAKES

N05NA--

DISASSEMBLY AND REASSEMBLY

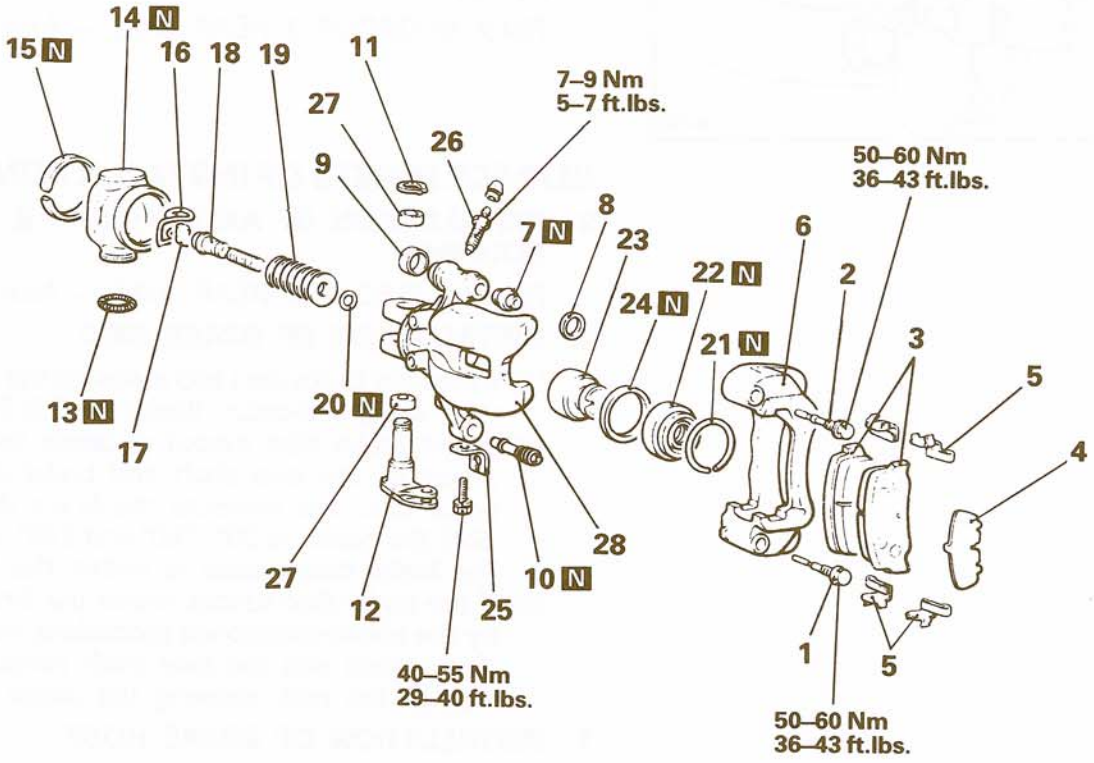

Disassembly steps

- ◆◆ 1. Lock pin
- ◆◆ 2. Guide pin
- 3. Pad assembly
- 4. Shim
- 5. Pad clip
- ◆◆ 6. Caliper support
- ◆◆ 7. Guide pin boot
- 8. Boot retainer
- 9. Lid
- ◆◆ 10. Lock pin boot
- ◆◆ 11. Retaining ring
- ◆◆ 12. Parking lever assembly
- 13. Garter spring
- ◆◆ 14. Lever cap
- 15. Cap ring
- 16. Return spring
- 17. Connecting link
- ◆◆ ◆◆ 18. Spindle
- ◆◆ 19. Spring washer
- ◆◆ 20. Spindle seal
- 21. Boot ring
- ◆◆ 22. Dust boot
- ◆◆ ◆◆ 23. Piston
- ◆◆ ◆◆ 24. Piston seal
- 25. Parking cable bracket
- 26. Bleeder screw
- ◆◆ ◆◆ 27. Bearing
- ◆◆ 28. Caliper body

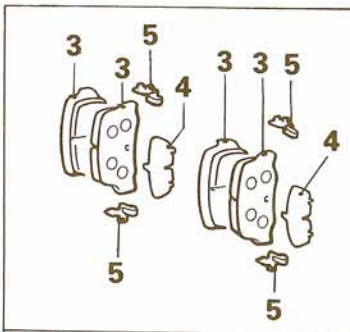

Brake pad kit

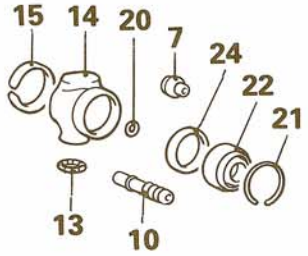

Seal and boot kit

NOTE
(1) Reverse the disassembly procedures to reassemble.
(2) ◆◆: Refer to "Service Points of Disassembly".
(3) ◆◆: Refer to "Service Points of Reassembly".
(4) N: Non-reusable parts

14Y242

SERVICE POINTS OF DISASSEMBLY N05NBAB

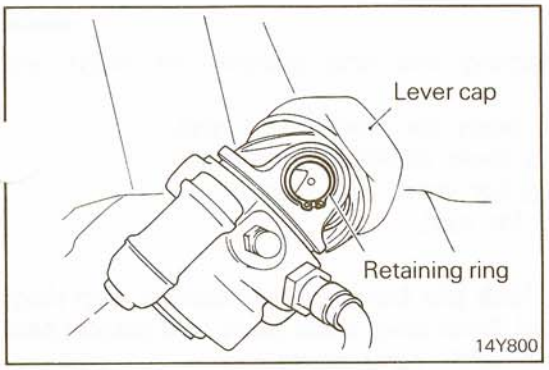

11. REMOVAL OF RETAINING RING

To remove the retaining ring, disengage the cap ring from the lever cap groove and slide the lever cap away.

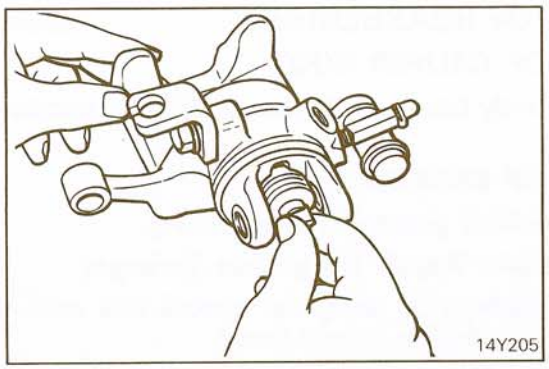

18. REMOVAL OF SPINDLE

Remove the spindle by unscrewing it.

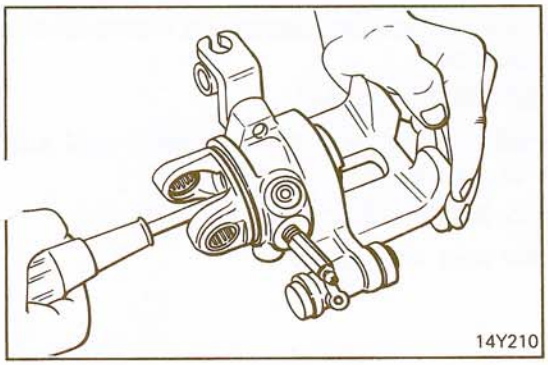

23. REMOVAL OF PISTON

Push out the piston from the caliper body.

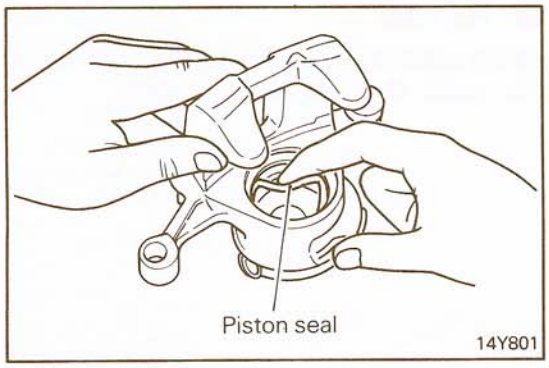

24. REMOVAL OF PISTON SEAL

Remove the piston seal.

Caution
Be careful not to damage the caliper bore.

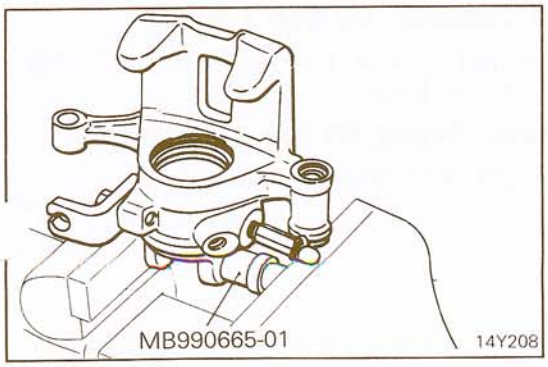

27. REMOVAL OF BEARING

Press out the bearings by using the special tool.

INSPECTION

N05NCAB

- Check the connecting link and spindle for wear and damage.
- Check the caliper body for cracks and rust.
- Check the parking lever assembly for rust.
- Check the bearing for wear and rust.
- Check the piston for rust.

Caution
The guide pin boot, lock pin boot, garter spring, cap ring, lever cap, spindle seal, boot ring, dust boot and piston seal must all be replaced with new parts.

SERVICE POINTS OF REASSEMBLY

N05NDAC

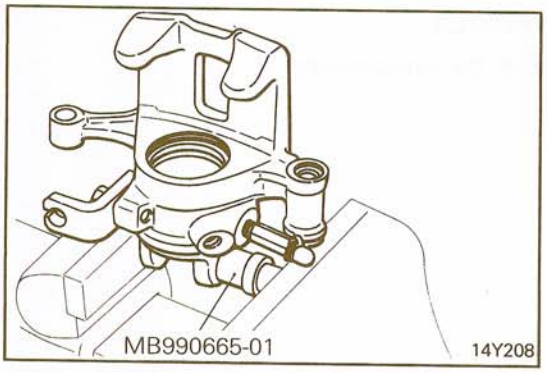

28. INSTALLATION OF CALIPER BODY

Clean the caliper body bore with trichloroethylene, alcohol or brake fluid.

27. INSTALLATION OF BEARING

(1) Apply the specified grease to the bearing.

Specified grease: Repair kit grease (orange)

(2) Press in the bearings by using the special tool until it becomes flush with the caliper body.

NOTE
Insert the bearings so that the depressed marks on the bearings face outward.

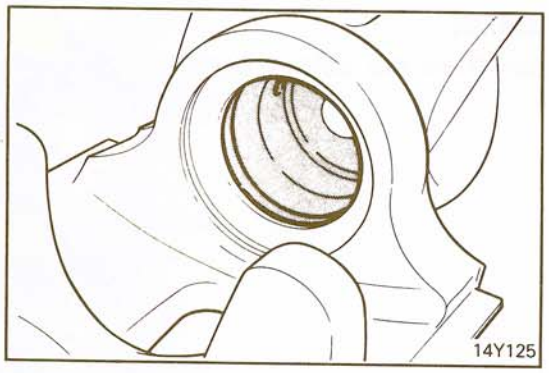

24. INSTALLATION OF PISTON SEAL

(1) Apply the specified brake fluid to the piston seal and inside surface of the cylinder.

Specified brake fluid: DOT 3

(2) Fit a piston seal into the cylinder.

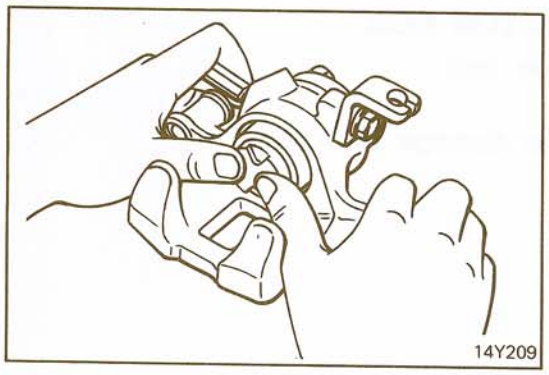

23. INSTALLATION OF PISTON

Gently insert the piston assembly into the cylinder by hand, being careful not to twist the piston assembly.

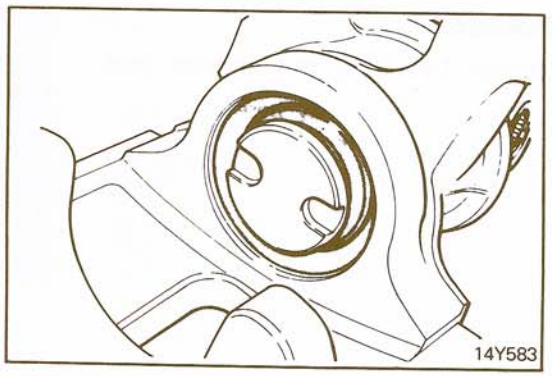

22. APPLICATION OF GREASE TO DUST BOOT

(1) Apply the specified grease to the dust boot fitting groove in the caliper body.

Specified grease: Repair kit grease (orange)

(2) Install a new dust boot and boot ring.

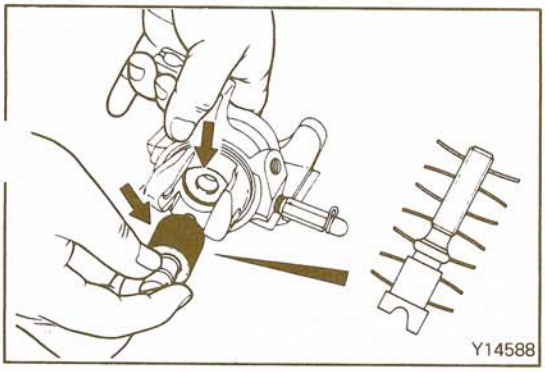

20. INSTALLATION OF SPINDLE SEAL / 19. SPRING WASHER / 18. SPINDLE

(1) Apply the specified brake fluid to the spindle seal.

Specified brake fluid: DOT 3

(2) Paying attention to the proper direction of installation, install the spring washers onto the spindle.
(3) Apply the specified grease to the contact surface of the caliper body and spring washers.

Specified grease: Repair kit grease (orange)

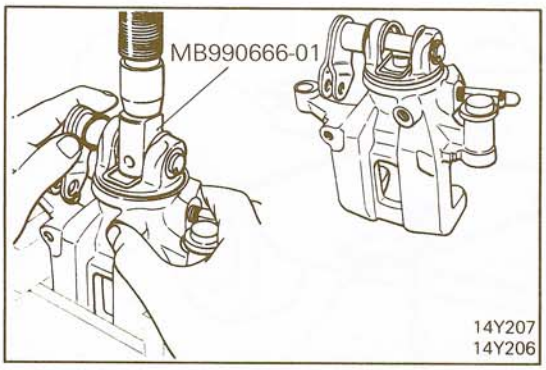

(4) Carefully screw the spindle into the caliper body until it rotates freely.
(5) Using the special tool, push the spring washers, and screw the spindle in with a screwdriver or other suitable tool.
(6) Set the connecting link and return spring on the spindle.

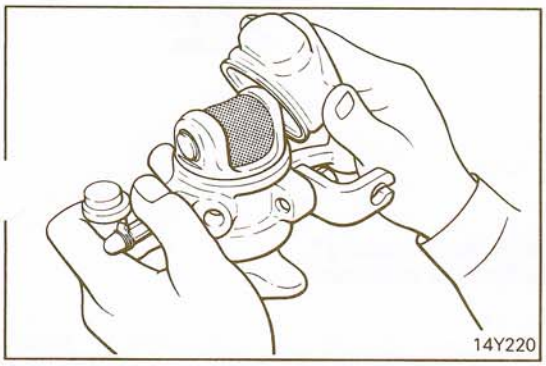

14. INSTALLATION OF LEVER CAP / 12. PARKING LEVER ASSEMBLY

(1) Install the lever cap to the parking lever assembly, and then insert them in the caliper body.
(2) Hold the parking lever assembly with the retaining ring.
(3) Apply plenty of the specified grease to the lever cap as well as to the lip section.

Specified grease: Repair kit grease (orange)

NOTE
Apply grease amply to the contact and sliding surfaces of spindle, connecting link and spring washer, etc.

(4) Install the lever cap to the caliper body assembly.

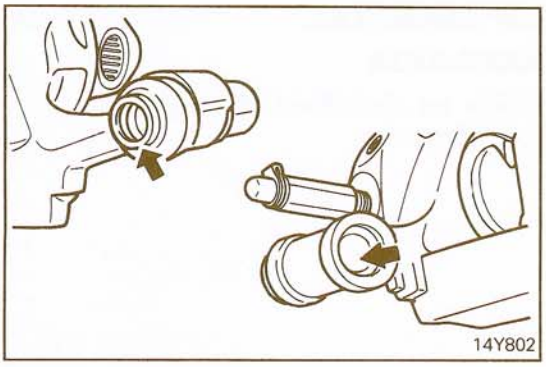

10. APPLICATION OF GREASE TO LOCK PIN BOOT / 7. GUIDE PIN BOOT / 6. CALIPER SUPPORT

Apply specified grease to lock pin, boot inside, guide pin boot mounting surface and caliper support and guide pin contact surface.

Specified grease: Repair kit grease (orange)

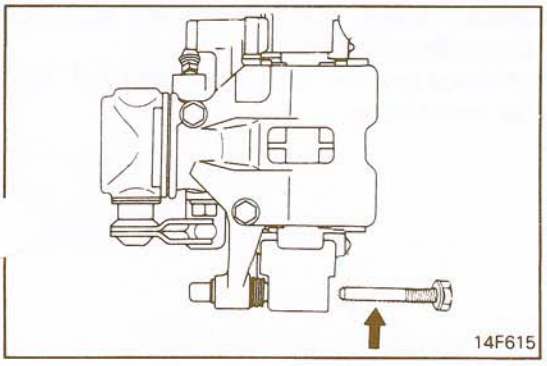

2. APPLICATION OF GREASE TO GUIDE PIN / 1. LOCK PIN

Apply a thin coat of specified grease to the guide pin and lock pin, and then install the caliper body to the caliper support.

Specified grease: Repair kit grease (orange)

REAR BRAKE LOCK-UP CONTROL SYSTEM

N05OA--

REMOVAL AND INSTALLATION

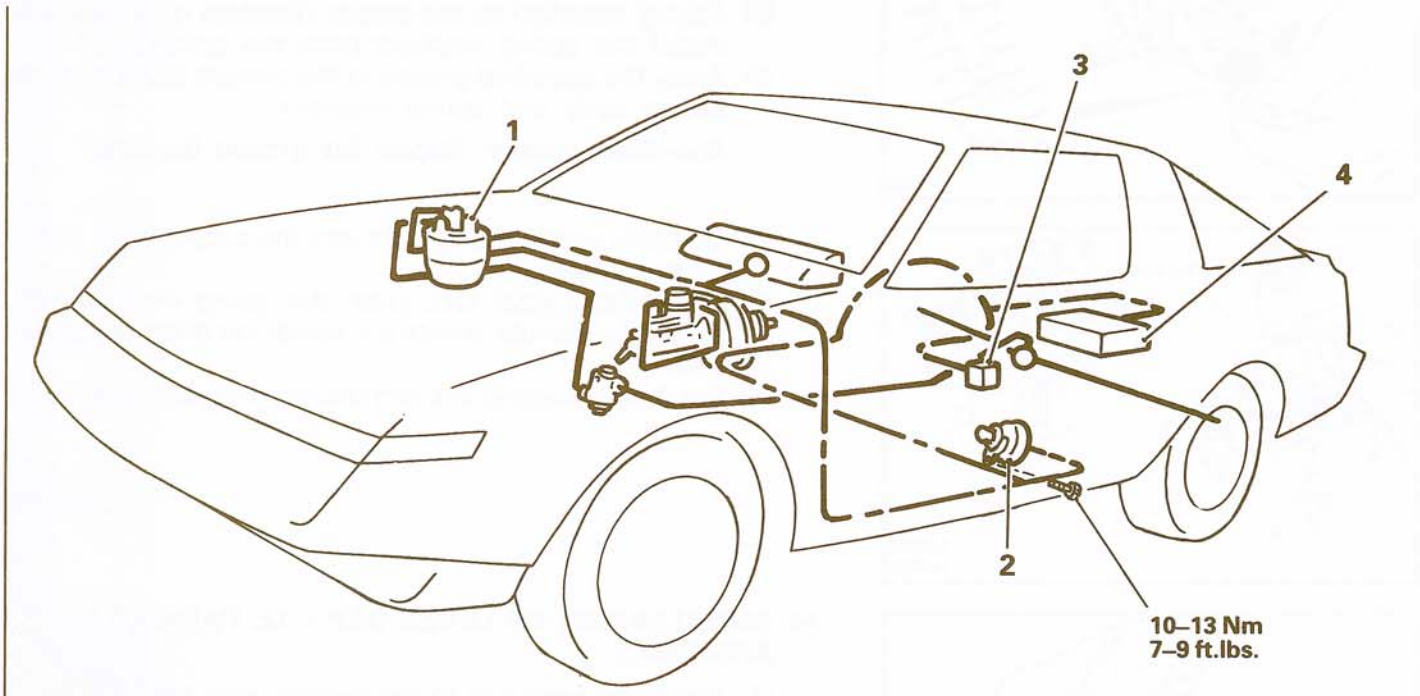

◆◆ 1. Modulator
◆◆ ◆◆ 2. Pulse generator
◆◆ ◆◆ 3. G-sensor
◆◆ 4. Control unit

NOTE
(1) ◆◆: Refer to "Service Points of Removal".
(2) ◆◆: Refer to "Service Points of Installation".

14Y803

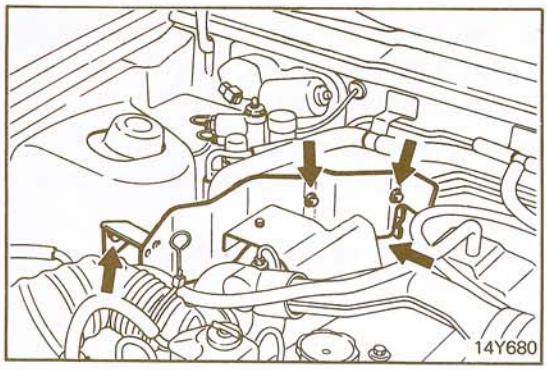

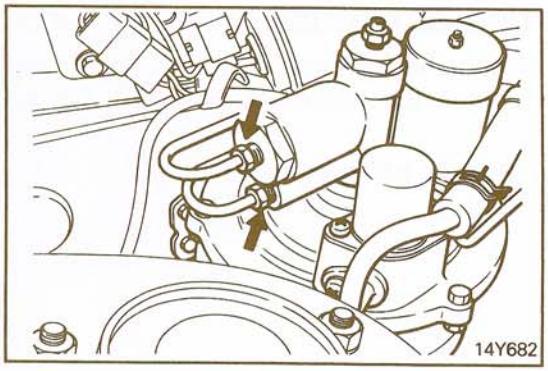

SERVICE POINTS OF REMOVAL

N05OBAA

1. REMOVAL OF MODULATOR

Remove the modulator as described below:
(1) Remove the heat protector.
(2) Remove the vacuum hose, the brake tube, and the connector for the solenoid valves.
(3) Remove the modulator bracket from the toeboard, and then remove the modulator.

STB Revision

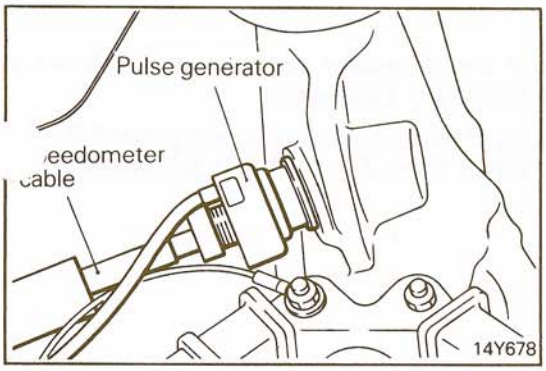

2. REMOVAL OF PULSE GENERATOR

After disconnecting the speedometer cable at the pulse generator side, remove the pulse generator.

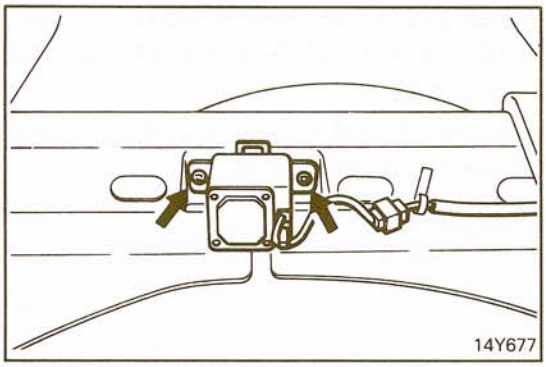

3. REMOVAL OF G-SENSOR

Remove the G-sensor from its position on the baggage compartment floor.

Caution
When removing the G-sensor, be careful not to subject it to any impact or violent shaking.

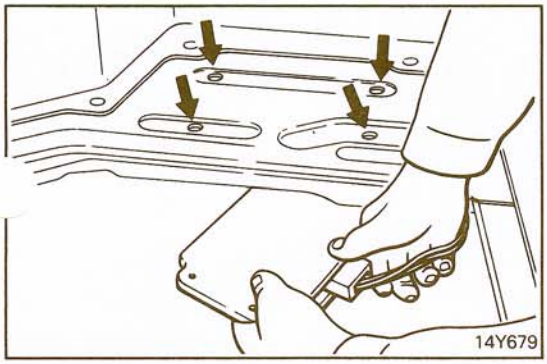

4. REMOVAL OF CONTROL UNIT

Remove the control unit from beneath the high floor side panel on the right side of the baggage compartment.

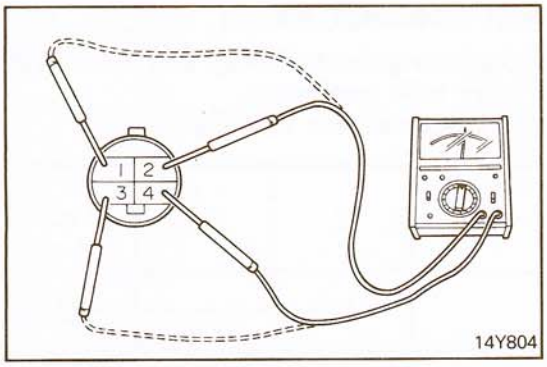

INSPECTION N05OCAA

MODULATOR

Measure the resistance value between the terminals with an ohmmeter.

Standard value:
Between terminals 1 – 3 (release solenoid valve)
3.8 – 4.8 Ω
Between terminals 2 – 4 (build-up solenoid valve)
4.5 – 5.5 Ω

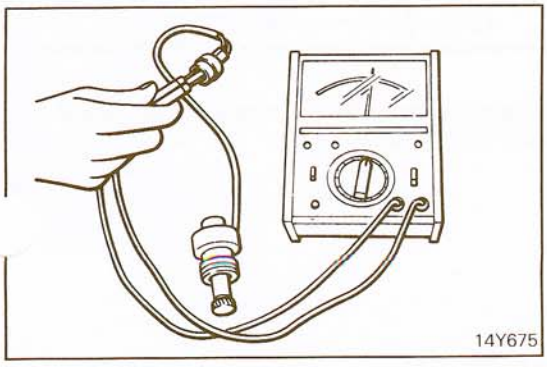

PULSE GENERATOR

Measure the resistance value between the terminals with an ohmmeter.

Standard value: 600 – 800 Ω

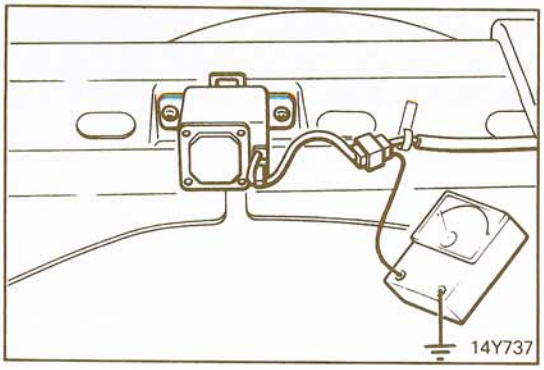

G-SENSOR

Measure the voltage of the G-sensor when it is laid down in accordance with the following procedure.

(1) Check voltage across R wire of G-sensor and ground for 7.0 to 7.5 V. Voltage other than 7.0 to 7.5 V indicates fau control unit.

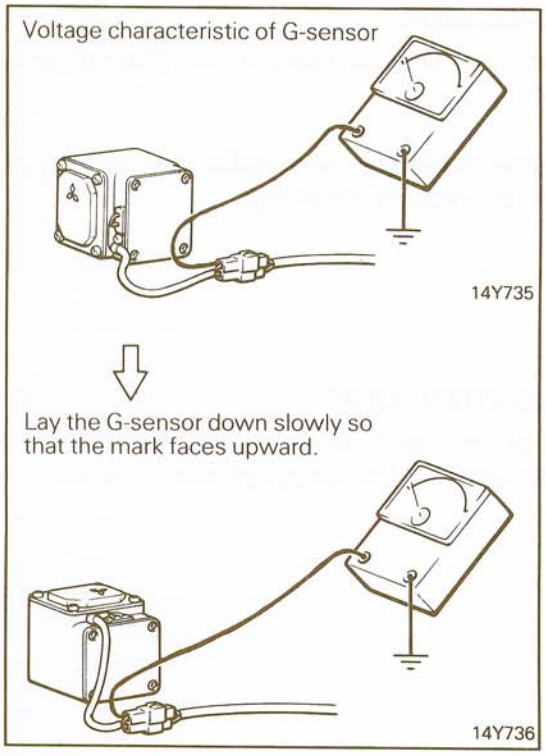

(2) Remove G-sensor and ground to vehicle body by wire.
(3) Measure voltage across G wire of G-sensor and ground.

Standard value: 1.1 – 1.5 V

(4) Turn G-sensor with mark upward. Measure voltage across G wire of G-sensor and ground.

Standard value: 4.6 – 5.0 V

If the voltage is out of standard value, replace the G-sensor.

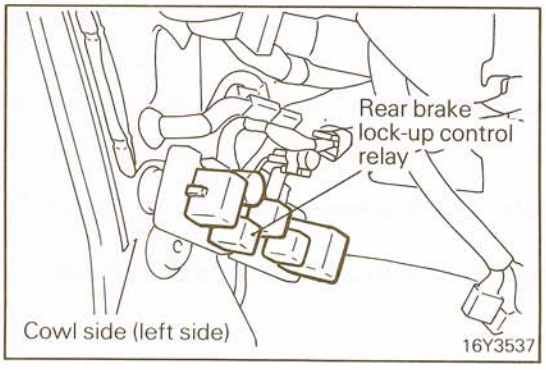

REAR BRAKE LOCK-UP CONTROL RELAY

(1) Remove the rear brake lock-up control relay, and connect an ohmmeter to the relay side connector.
(2) Check for continuity between the terminals.

Terminal / Condition	1	2	3	4
When de-energized		○		○
When energized	○	⊕	○	⊖

NOTE
(1) ○–○ indicates that there is continuity between the terminals.
(2) ⊕---⊖ indicates power supply connection.

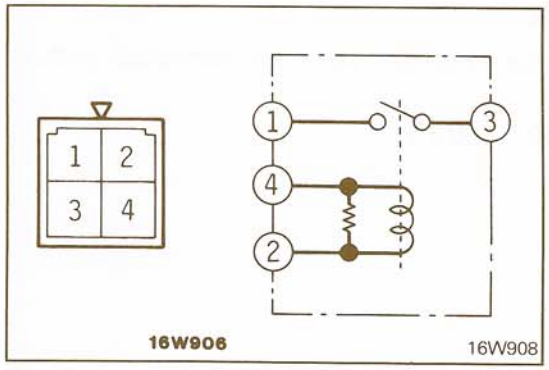

SERVICE POINTS OF INSTALLATION N05ODAA

3. INSTALLATION OF G-SENSOR

Install the G-sensor while using a level to be sure that it is perfectly horizontal.

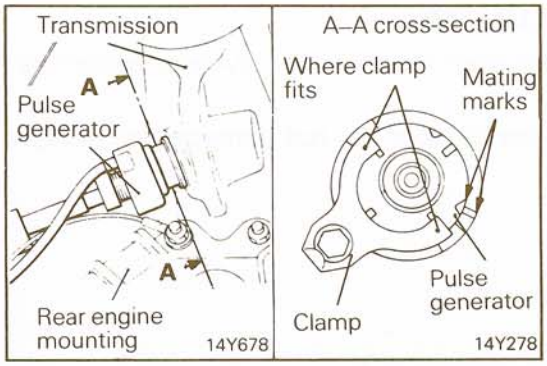

2. INSTALLATION OF PULSE GENERATOR

(1) Align the mating marks of the pulse generator and the transmission.
(2) Securely fit the clamp in the grooves in the pulse generator body.

DISASSEMBLY AND REASSEMBLY N05OEAA

Disassembly steps

- ◆◆ 1. Hydraulic cylinder
- ◆◆ 2. Plunger
- ◆◆ ▶◀ 3. Dust seal
- ◆◆ ▶◀ 4. Snap ring
- ▶◀ 5. Cup retainer
- 6. Back-up ring
- ◆◆ ▶◀ 7. Seal cup
- ◆◆ 8. Bleeder cap
- ◆◆ ▶◀ 9. O-ring
- 10. Check valve piston spring
- 11. Check valve piston
- ▶◀ 12. Check valve seal
- ▶◀ 13. Valve cap
- 14. Gasket
- 15. Choke valve spring
- 16. Spring seal
- ◆◆ ▶◀ 17. Bushing
- ◆◆ ▶◀ 18. Choke valve piston
- ◆◆ ▶◀ 19. O-ring
- 20. Vacuum cylinder assembly

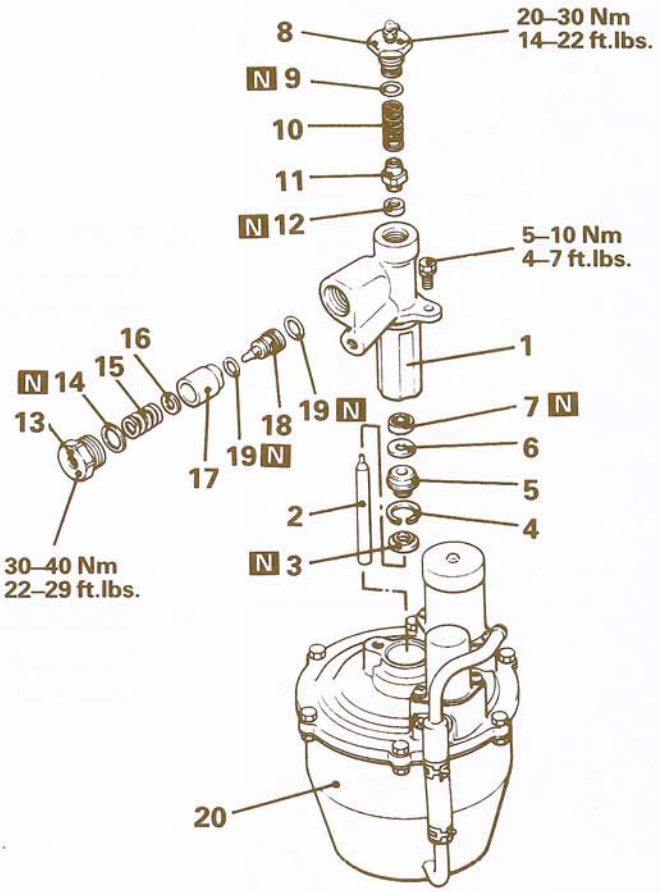

NOTE
(1) Reverse the disassembly procedures to reassemble.
(2) ◆◆: Refer to "Service Points of Disassembly".
(3) ▶◀: Refer to "Service Points of Reassembly".
(4) N: Non-reusable parts

14Y292

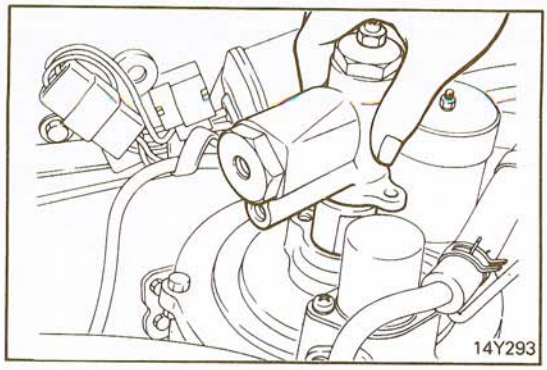

SERVICE POINTS OF DISASSEMBLY N05OFAA

1. REMOVAL OF HYDRAULIC CYLINDER

Remove the hydraulic cylinder assembly from the modulator by pulling out straight.

NOTE
After removal of the hydraulic cylinder, be sure to prevent dust and dirt from entering the vacuum cylinder assembly.

2. REMOVAL OF PLUNGER

Pull out the plunger from the hydraulic cylinder assembly.

NOTE
When pulling out the plunger, do not damage the plunger surface.

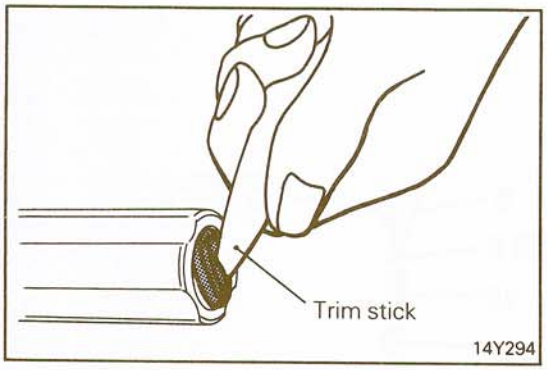

3. REMOVAL OF DUST SEAL

Use trim stick to remove the dust seal.

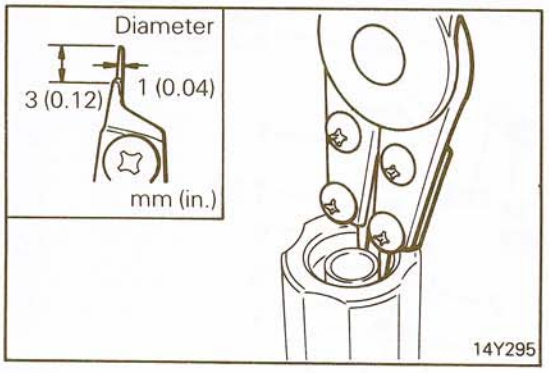

4. REMOVAL OF SNAP RING

Finish the ends of snap ring pliers as shown and use the pliers to remove the snap ring.

NOTE
Do not damage the inner surface of the hydraulic cylinder.

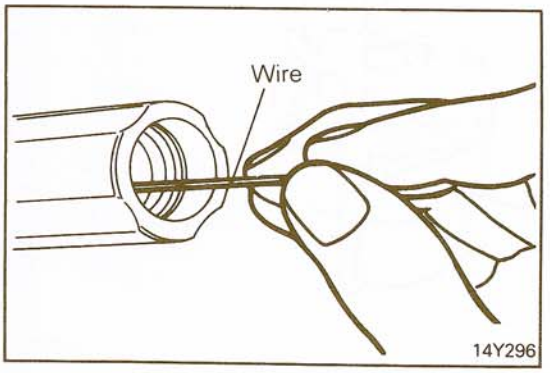

7. REMOVAL OF SEAL CUP

Remove the seal cup from the hydraulic cylinder with a wire having an L-shaped end.

STB Revision

8. REMOVAL OF BLEEDER CAP

Hold the hydraulic cylinder in a vice and remove the bleeder cap.

NOTE
When the hydraulic cylinder is held in a vice, be sure to hold the portion painted black.

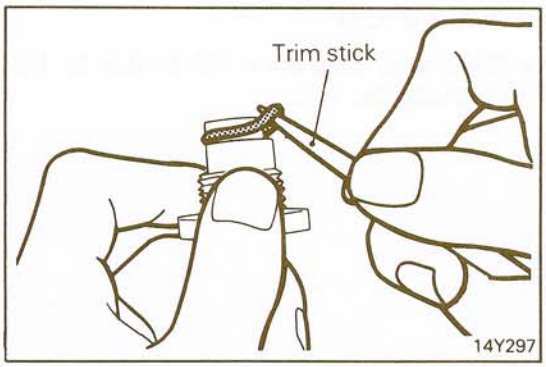

9. REMOVAL OF O-RING

Use trim stick to remove O-ring from the bleeder cap.

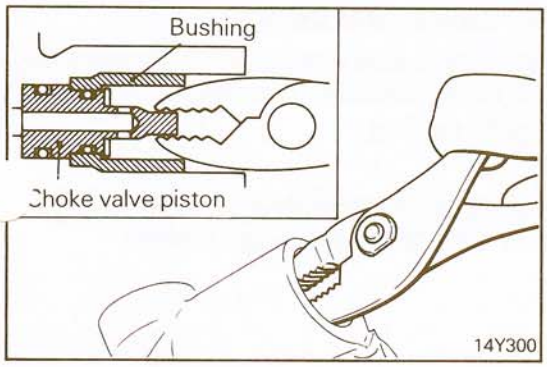

17. REMOVAL OF BUSHING / 18. CHOKE VALVE PISTON

(1) Hold the end of choke valve piston with a long-nosed pliers or the like and remove the choke valve piston and bushing at the same time from the hydraulic cylinder.
(2) Push the choke valve piston out with fingers to remove it from the bushing.

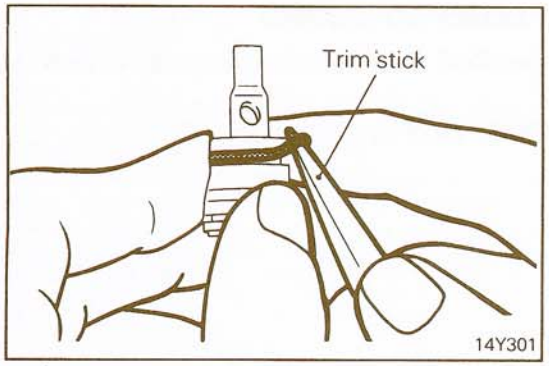

19. REMOVAL OF O-RING

Remove O-ring from the choke valve piston with the trim stick.

INSPECTION

N05OGAA

- Check the each valve spring for weakness.
- Check the hydraulic cylinder for rust and scars on inside surface.
- Check the check valve piston and choke valve piston for rust, scars, wear and weakness.

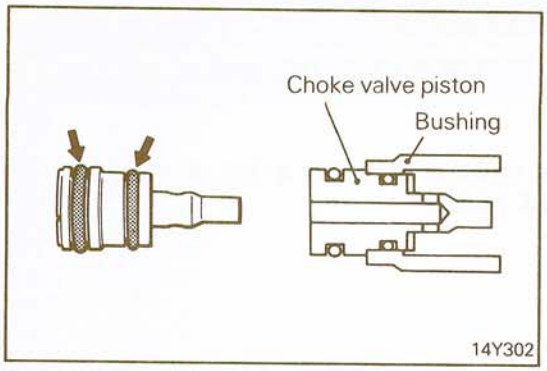

SERVICE POINTS OF REASSEMBLY

N05OHAB

19. INSTALLATION OF O-RING / 18. CHOKE VALVE PISTON / 17. BUSHING

(1) Coat O-ring with specified brake fluid and install it to th choke valve piston.

Specified brake fluid: DOT 3

(2) Assemble the choke valve piston to the bushing before installing it to the hydraulic cylinder.

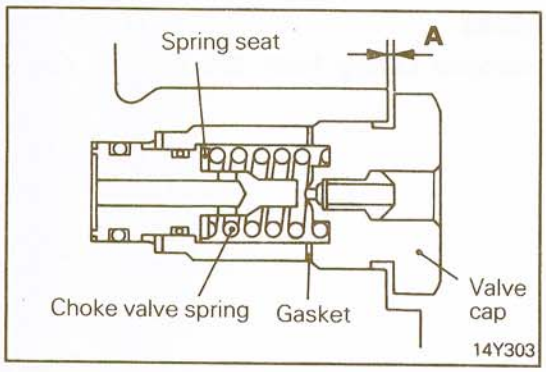

13. INSTALLATION OF VALVE CAP

After tightening the valve cap, clearance (A) of 0.5 to 1.0 mm (0.02 to 0.04 in.) must be left.

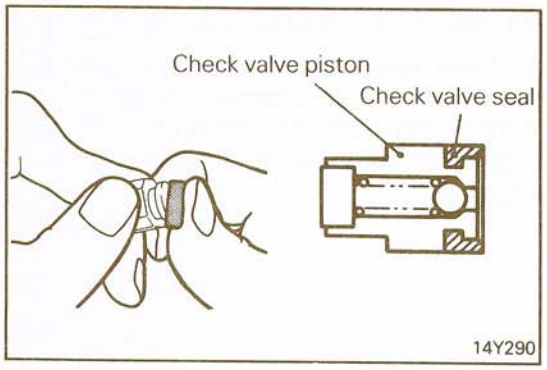

12. INSTALLATION OF CHECK VALVE SEAL

After coating the check valve seal with specified brake fluid, install with its larger inner diameter end towards outside.

Specified brake fluid: DOT 3

Caution
If the check valve seal is installed in the reverse direction, the brake will become inoperative.

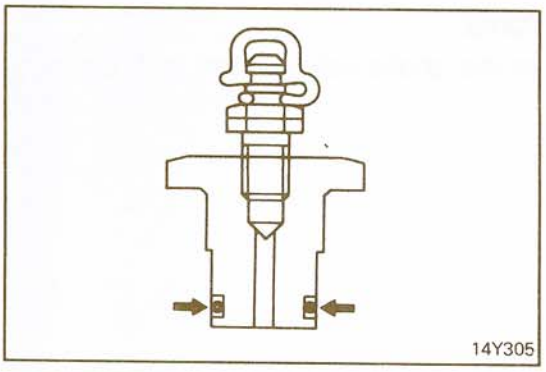

9. APPLICATION OF FLUID TO O-RING

Coat O-ring with specified brake fluid and install it to the bleeder cap.

Specified brake fluid: DOT 3

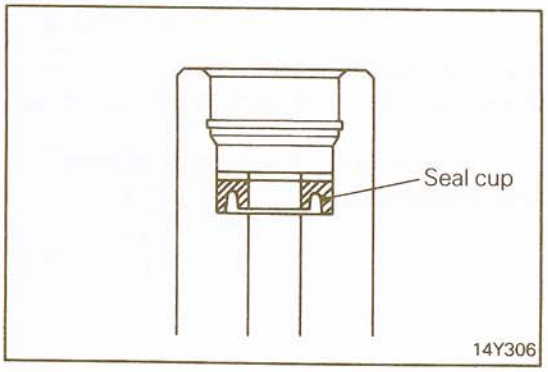

7. APPLICATION OF FLUID TO SEAL CUP

Coat the seal cup with rust preventive agent and install it with its concave side directed towards the hydraulic cylinder.

Specified brake fluid: DOT 3

5. INSTALLATION OF CUP RETAINER

Install the cup retainer, with its large outer diameter end on the hydraulic cylinder side.

STB Revision

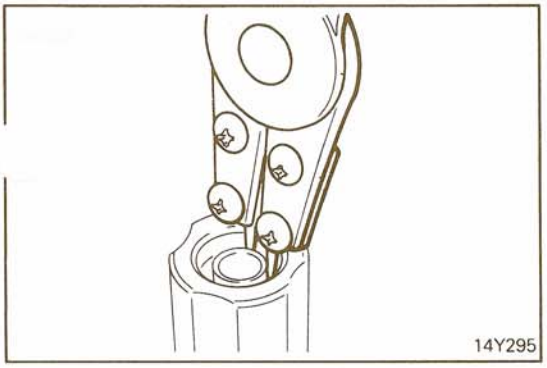

4. INSTALLATION OF SNAP RING

Fit the snap ring securely in the snap ring groove.

NOTE
After installation of the snap ring, hold the cup retainer lightly with a long-nosed pliers and pull it to make sure that the snap ring is positively installed.

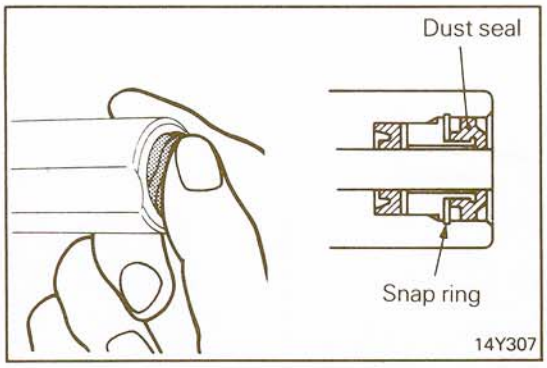

3. INSTALLATION OF DUST SEAL

(1) Coat the dust seal with silicone grease.
(2) While holding it with fingers, install it to each of the cup retainer and hydraulic cylinder.

Caution
Do not force the periphery of the dust seal inward, because a specified clearance is provided between dust seal and snap ring.

PARKING BRAKE LEVER

N05WA--

REMOVAL AND INSTALLATION

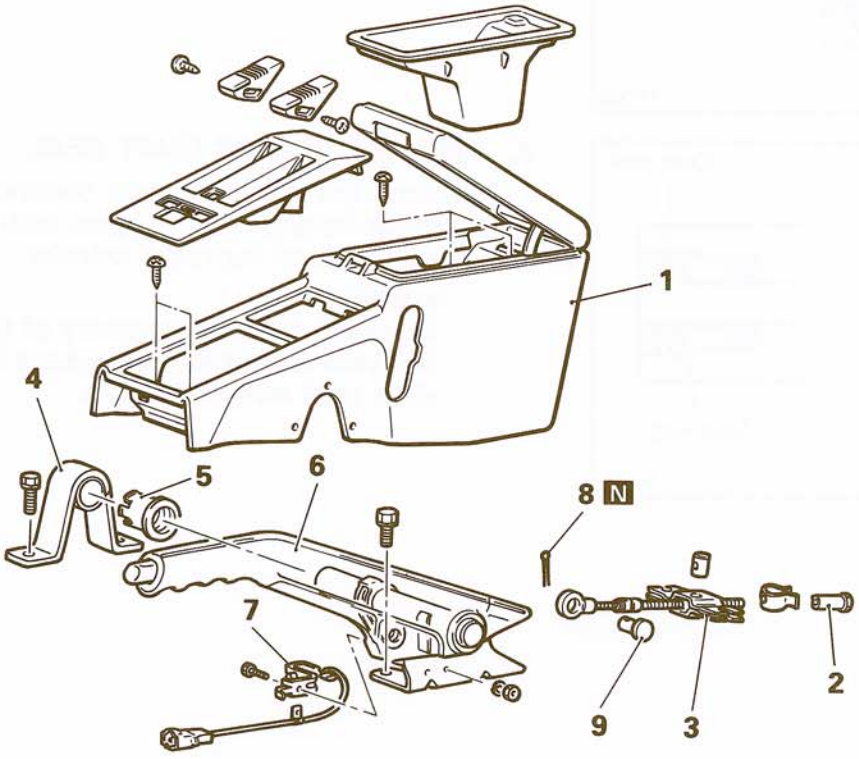

14Y812

Removal steps

◀▶ ▶◀ 1. Rear floor console
▶◀ Adjustment of parking brake lever stroke
2. Adjuster
3. Equalizer
4. Stay
▶◀ 5. Bushing
▶◀ 6. Parking brake lever
7. Parking brake switch
8. Cotter pin
▶◀ 9. Clevis pin

NOTE
(1) Reverse the removal procedures to reinstall.
(2) ◀▶: Refer to "Service Points of Removal".
(3) ▶◀: Refer to "Service Points of Installation".
(4) N: Non-reusable parts

SERVICE POINT OF REMOVAL

N05WBAA

1. REMOVAL OF REAR FLOOR CONSOLE

Refer to GROUP 23 BODY – Floor Console.

INSPECTION

N05WCAB

- Check the bushing for wear.
- Check the parking brake switch for malfunction.
- Check the parking brake lever ratchet for wear.

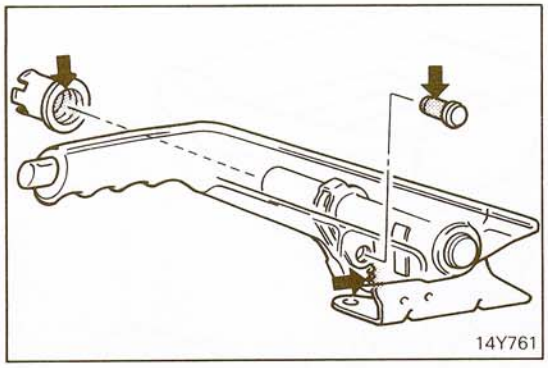

SERVICE POINTS OF INSTALLATION

N05WDAD

9. APPLICATION OF GREASE TO CLEVIS PIN / 6. PARKING BRAKE LEVER / 5. BUSHING

Apply specified grease to the clevis pin, bushing and ratchet plate.

Specified grease: Multipurpose grease SAE J310, NLGI No. 3

- **ADJUSTMENT OF PARKING BRAKE LEVER STROKE**

Adjust the adjuster to make sure that the number of clicks is within specification when the lever is pulled with 200 N (45 lbs.) force. (Refer to P.5-34.)

Standard value: 4 – 5 clicks

1. INSTALLATION OF REAR FLOOR CONSOLE

Refer to GROUP 23 BODY – Floor Console.

PARKING BRAKE CABLE

N05XA--

REMOVAL AND INSTALLATION

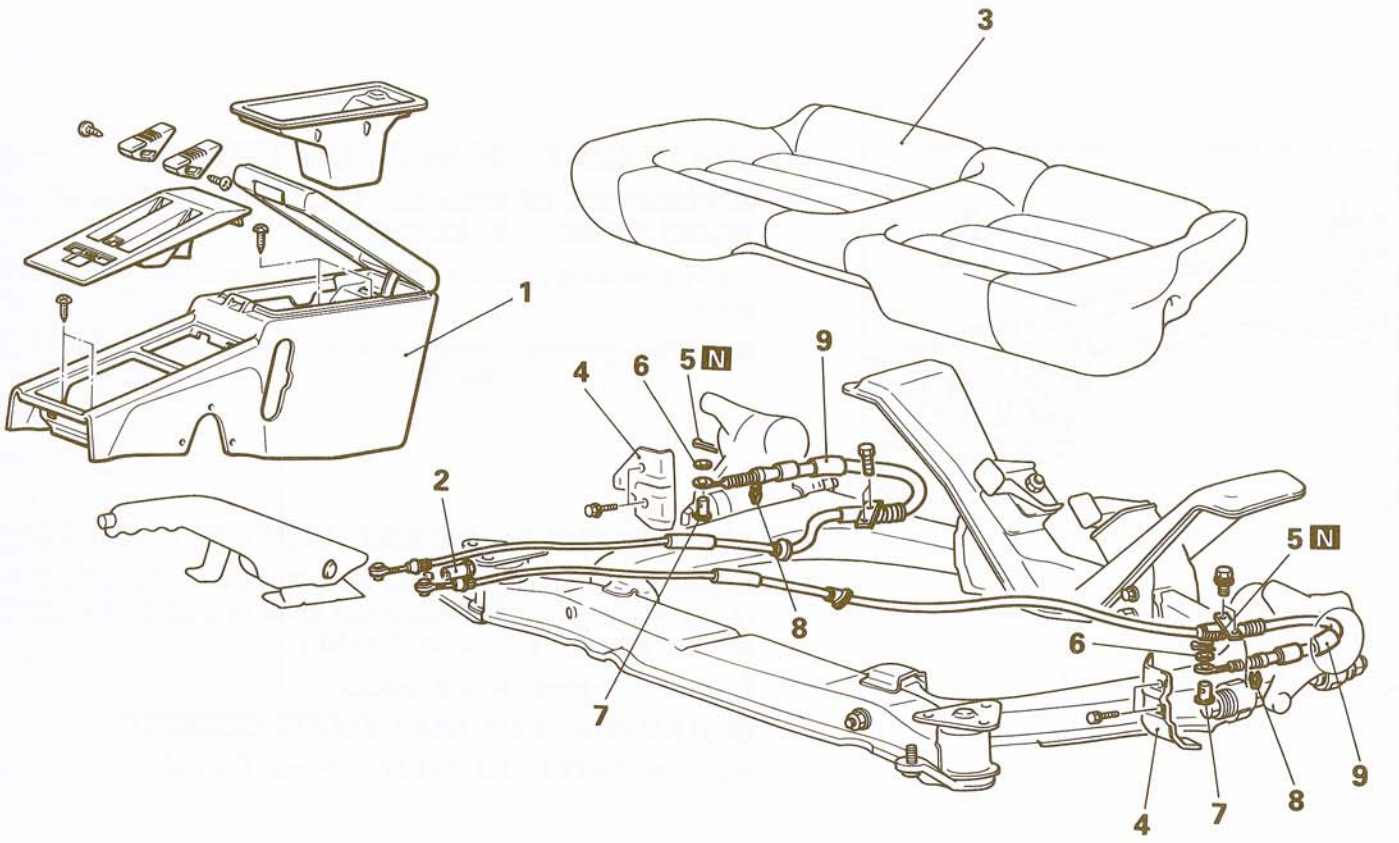

14Y813

Removal steps

- ◀▶ ▶◀ 1. Rear floor console
- ▶◀ Adjustment of parking brake lever stroke
- 2. Adjuster
- ◀▶ 3. Rear seat cushion
- 4. Dust cover
- ◀▶ 5. Cotter pin
- ◀▶ 6. Washer
- ◀▶ 7. Clevis pin
- ◀▶ 8. Clip
- ◀▶ ▶◀ 9. Parking brake cable

NOTE
(1) Reverse the removal procedures to reinstall.
(2) ◀▶: Refer to "Service Points of Removal".
(3) ▶◀: Refer to "Service Points of Installation".
(4) N: Non-reusable parts

SERVICE POINTS OF REMOVAL

N05XBAB

1. REMOVAL OF REAR FLOOR CONSOLE

Refer to GROUP 23 BODY – Floor Console.

3. REMOVAL OF REAR SEAT CUSHION

Refer to GROUP 23 BODY – Seat.

STB Revision

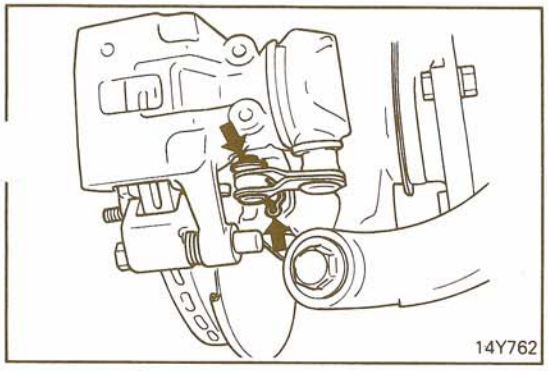

5. REMOVAL OF COTTER PIN / 6. WASHER / 7. CLEVIS PIN / 8. CLIP

(1) Remove the cotter pin, clevis pin and washer.
(2) Remove the clip by pulling downward, and remove the parking brake cable out of the groove in the brake body.

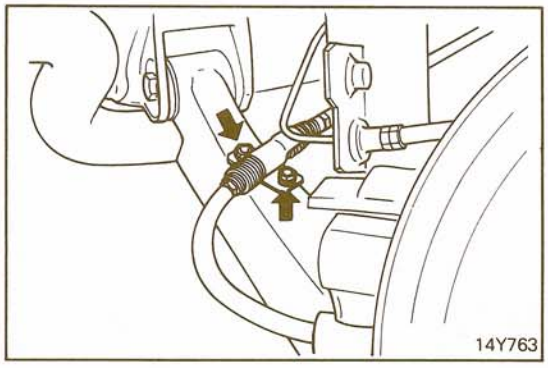

9. REMOVAL OF PARKING BRAKE CABLE

(1) Remove the parking brake cable mounting bracket from the lower control arm.
(2) Pull the parking brake cable out of the vehicle.

INSPECTION N05XCAB

Check the parking brake cable for damage and operation.

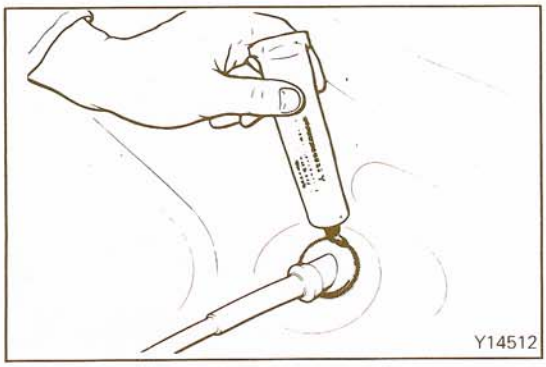

SERVICE POINTS OF INSTALLATION N05XDAB

9. APPLICATION OF SEALANT TO PARKING BRAKE CABLE

Apply drying sealant to the grommet and body panel contact surface.

- **ADJUSTMENT OF PARKING BRAKE LEVER STROKE**

Adjust the adjuster to make sure that the number of clicks is within specification when the lever is pulled with 200 N (45 lbs.) force. (Refer to P.5-34.)

Standard value: 4 – 5 clicks

1. INSTALLATION OF REAR FLOOR CONSOLE

Refer to GROUP 23 BODY – Floor Console.

CLUTCH

CONTENTS

CLUTCH DISC AND RELEASE FORK **17**

CLUTCH MASTER CYLINDER AND LINE **10**

CLUTCH PEDAL **8**

CLUTCH RELEASE CYLINDER **14**

GENERAL INFORMATION **2**

SERVICE ADJUSTMENT PROCEDURES **6**

- Bleeding 7
- Clutch Pedal Inspection and Adjustment 6

SPECIAL TOOL **4**

SPECIFICATIONS **2**

- General Specifications 2
- Lubricants 3
- Service Specifications 3
- Torque Specifications 3

TROUBLESHOOTING **5**

- Clutch Chatters
- Clutch Drags or Does Not Release
- Clutch Noises
- Clutch Operation Erratic or Rough
- Clutch Slips

CAUTION
When servicing clutch assemblies or components, do NOT create dust by sanding, grinding or by cleaning clutch parts with a dry brush or with compressed air. (A water dampened cloth should be used). The clutch disc contains "Asbestos Fibers" which can become airborne if dust is created during service operations. Breathing dust containing "Asbestos Fibers" may cause serious bodily harm.

GENERAL INFORMATION

N06BAAE

The clutch is dry single plate diaphragm type with hydraulic clutch control.
The clutch control consists of clutch pedal, clutch master cylinder, clutch tube, release cylinder, etc. The clutch pedal is suspended type.

SPECIFICATIONS

N06CA- -

GENERAL SPECIFICATIONS

Items	KM132-B-BNUL	KM132-G-CNL
Clutch operating method	Hydraulic type	Hydraulic type
Inside diameter of clutch master cylinder mm (in.)	15.87 (0.62)	15.87 (0.62)
Clutch disc		
Type	Single dry disc type	Single dry disc type
Facing diameter (outside x inside) mm (in.)	225 x 150 (8.86 x 5.91)	225 x 150 (8.86 x 5.91)
Number of torsion springs	4	4
Clutch cover assembly		
Type	Diaphragm spring, strap drive type	Diaphragm spring, strap drive type
Setting load N (lbs.)	5,394 (1,213)	5,982 (1,345)
Mounting bolt circle diameter mm (in.)	264 (10.39)	264 (10.39)
Clutch release bearing		
Type	Self-centering type	Self-centering type
Free travel	0 (Zero) – Constant contact type	0 (Zero) – Constant contact type
Clutch release cylinder		
Cylinder bore diameter mm (in.)	19.05 (0.75)	19.05 (0.75)

SERVICE SPECIFICATIONS

N06CB- -

mm (in.)

Items	Specifications
Standard value	
Clutch pedal height	187 – 193 (7.3 – 7.6)
Clutch pedal play (at clevis pin)	1 – 3 (0.04 – 0.10)
Clutch pedal free play (total)	6 – 13 (0.2 – 0.5)
Distance between pedal pad upper surface and floorboard measured with clutch disengaged	35 (1.4)
Limit	
Master cylinder to piston clearance	0.15 (0.006)
Clutch disc Rivet sink	0.3 (0.012)

TORQUE SPECIFICATIONS

N06CC- -

Items	Nm	ft.lbs.
Clutch to flywheel	15 – 21	11 – 15
Release cylinder to transmission case	30 – 41	22 – 30
Transmission to engine	43 – 53	32 – 39
Fulcrum	30 – 41	22 – 30
Eye bolt	20 – 25	14 – 18
Clutch tube flare nut	13 – 17	9.4 – 12.3
Clutch hose bracket	8	5.8
Clutch master cylinder to toeboard	10 – 15	7.2 – 10.8

LUBRICANTS

N06CD- -

Items	Specified lubricants	Quantity
Clutch fluid	Brake fluid DOT 3	As required
Grease for clutch pedal shaft, bushings, return spring, and clevis pin	Multipurpose grease SAE J310, NLGI No. 0 or equivalent	As required
Release cylinder push rod and release fork surfaces making contact with each other	MITSUBISHI Genuine Grease Part No. 0101011	As required
Clutch release bearing inner surface	MITSUBISHI Genuine Grease Part No. 0101011	As required
Clutch disc spline inner diameter	MITSUBISHI Genuine Grease Part No. 0101011	As required
Release fork and fulcrum arm surfaces making contact with each other	MITSUBISHI Genuine Grease Part No. 0101011	As required
Release bearing and release fork surfaces making contact with each other	MITSUBISHI Genuine Grease Part No. 0101011	As required
Release cylinder inner diameter and piston assembly	Brake fluid DOT 3	As required

SPECIAL TOOL

N06DA--

Tool (Number and name)	Use
MD998126 Clutch disc center guide 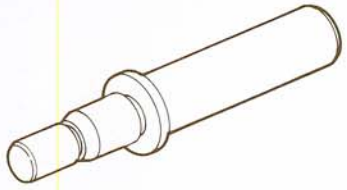	Alignment of clutch disc center hole

TROUBLESHOOTING

N06EAAE

Symptom	Probable cause	Remedy	Reference page
Clutch slips	Insufficient clutch pedal free play	Adjust	6-5
	Oil or grease on clutch facing Clutch facing worn Pressure spring deteriorated	Replace	6-17
	Pressure plate or flywheel runout Hydraulic system failure	Repair or replace	6-10,12, 14,15,17
Clutch drags or does not release	Excessive clutch pedal free play	Adjust	6-5
	Interference between pedal and floor panel	Correct	6-5
	Pilot bearing worn or broken Clutch disc warped Pressure plate, disc or throwout bearing damaged	Replace	6-17
	Hydraulic system failure	Repair or replace	6-10, 12, 14, 15
Clutch chatters	Facing hardened Facing stained with oil or grease Weak or broken disc damper springs Improper facing contact or disc runout Pressure plate or flywheel warped	Replace	6-17
	Loose engine mounting	Repair or replace	21-10
lutch noises	Release bearing broken, worn or poorly lubricated Pilot bearing worn Disc hub loose Disc plate cracked Torsion springs deteriorated or broken	Replace	6-17
Clutch operation erratic or rough	Facing stained with grease or oil Facing worn or rivet loose Torsion spring deteriorated or broken	Replace	6-17
	Insufficient lubricant on clutch pedal pivot	Lubricate	6-17

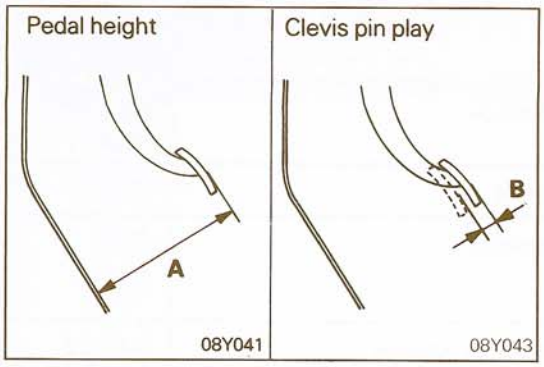

SERVICE ADJUSTMENT PROCEDURES

N06FAAG

CLUTCH PEDAL INSPECTION AND ADJUSTMENT

1. Measure the clutch pedal height and clutch pedal clevis pin play. If the clutch pedal height and clutch pedal clevis pin play are not within the standard value, adjust it by using the following procedure:

   Standard value:
   (A) 187 – 193 mm (7.4 – 7.6 in.)
   (B) 1 – 3 mm (0.04 – 0.12 in.)

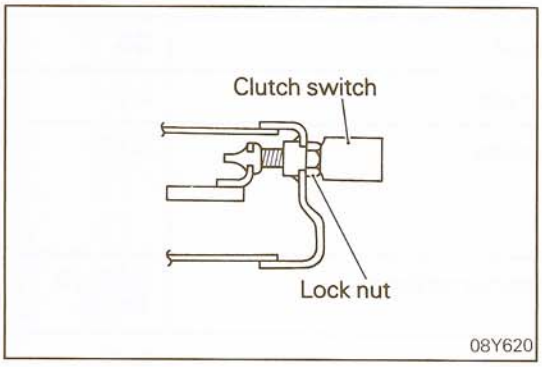

2. Disconnect the clutch switch connector and turn the switch for standard clutch pedal height. Then lock with the lock nut.

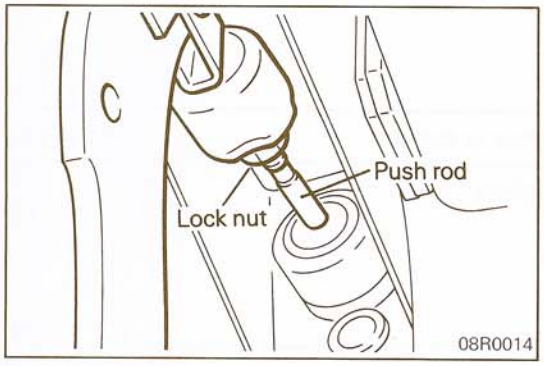

3. Turn the push rod so as to adjust so that the play at clutch pedal clevis pin becomes within the standard value, and then secure with the lock nut.

   Caution
   Do not push the push rod in when making the adjustment of clutch pedal clevis pin play.

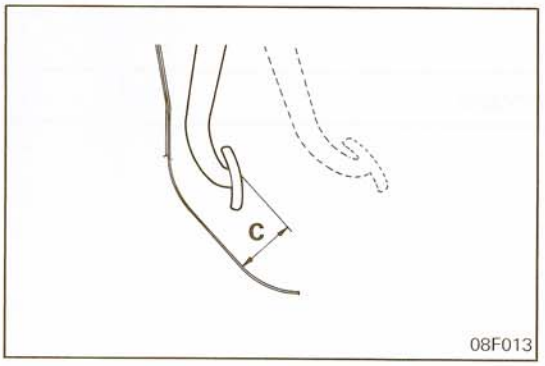

4. After depressing the clutch pedal a few times, confirm that the distance between the clutch pedal and the floorboard is more than the standard value when the clutch is disengaged.

   Standard value (C): 35 mm (1.4 in.)

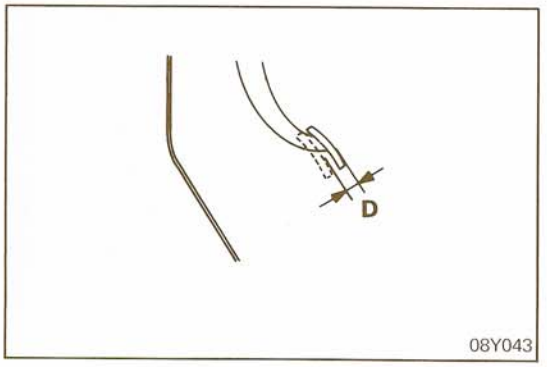

5. Then, measure the clutch pedal free play (including the play at the clutch pedal clevis pin) and confirm that it is within the standard value.

   Standard value (D): 6 – 13 mm (0.2 – 0.5 in.)

   If the clearance and/or the clutch pedal free play do not meet the standard value, probably there is air in the hydraulic system or a malfunction of the clutch itself, so bleed out the air or disassemble and inspect the clutch.

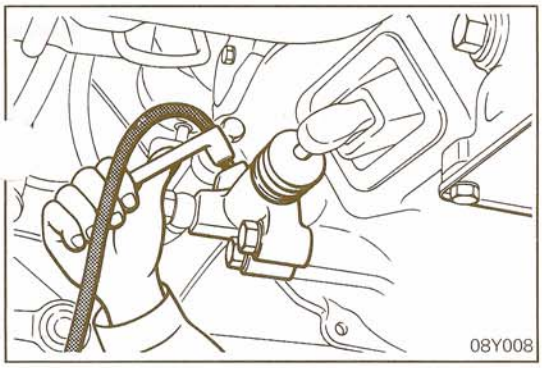

BLEEDING

Whenever the clutch tubing, the clutch hose, and/or the clutch master cylinder have been removed, or if the clutch pedal is spongy, bleed the system.

1. Loosen the bleeder screw at the clutch release cylinder.
2. Push clutch pedal down slowly until all air is expelled.
3. Hold clutch pedal down until bleeder screw is retightened.
4. Refill clutch master cylinder with specified clutch fluid.

Caution
Use the specified clutch fluid only.

Specified clutch fluid: Brake fluid DOT 3

CLUTCH PEDAL

N06PDAH

REMOVAL AND INSTALLATION

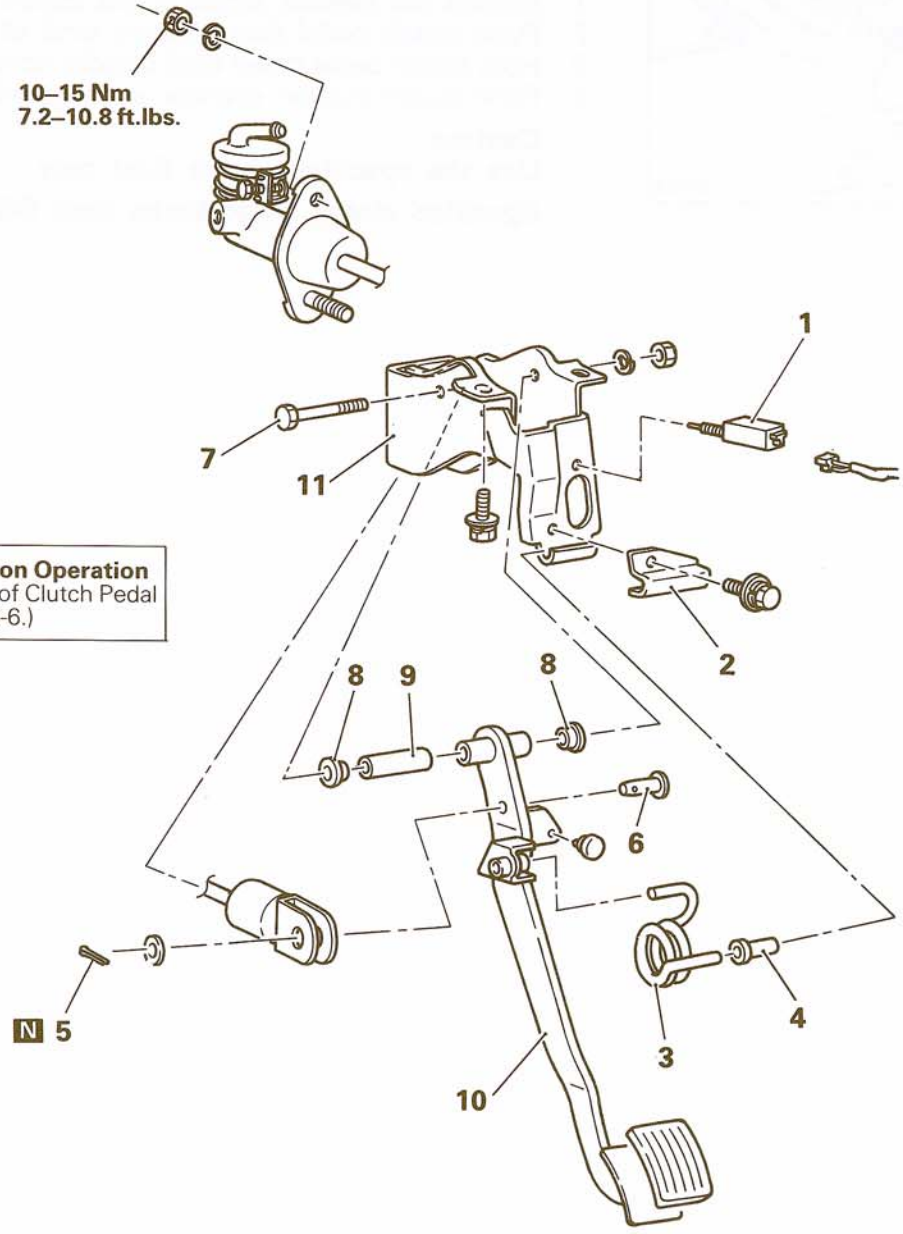

Post-installation Operation
- Adjustment of Clutch Pedal (Refer to P.6-6.)

Removal steps

1. Clutch switch
2. Clip
3. ◆◆ Return spring
4. Return spring bushing
5. Cotter pin
6. ◆◆ Clevis pin
7. ◆◆ Pedal shaft
8. ◆◆ Pedal shaft bushing
9. ◆◆ Spacer
10. Clutch pedal
11. Clutch pedal bracket

NOTE
(1) Reverse the removal procedures to reinstall.
(2) ◆◆: Refer to "Service Points of Installation".
(3) N: Non-reusable parts

08Y636

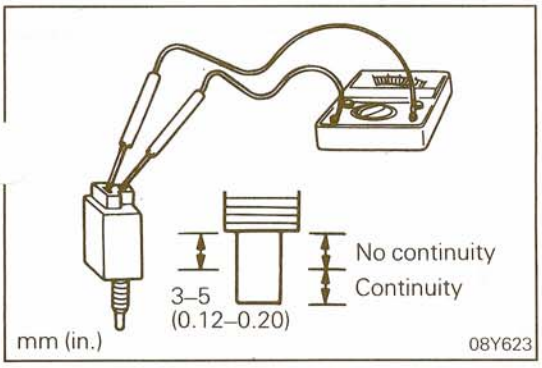

INSPECTION

N06PCAE

CLUTCH SWITCH

Check the clutch switch operation as follows:
Check with a circuit tester connected to the clutch switch terminal. The switch is normal if there is continuity when the switch plunger is pushed in and no continuity when the plunger is released.

- Check the bushing for wear.
- Check the pedal arm for bend or torsion.
- Check the return spring for damage.

SERVICE POINTS OF INSTALLATION

N06PDAI

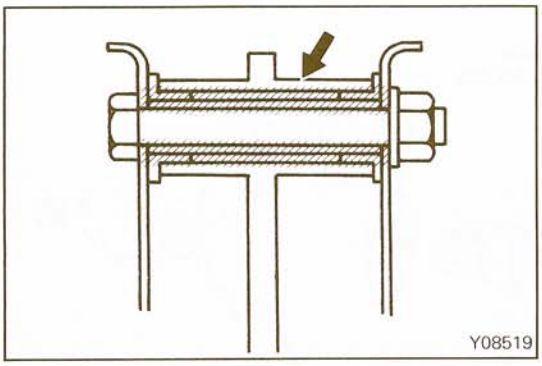

9. APPLICATION OF GREASE TO SPACER / 8. PEDAL SHAFT BUSHING / 7. PEDAL SHAFT

Apply specified grease to the spacer, pedal shaft bushing and pedal shaft.

Specified grease: Multipurpose grease SAE J310, NLGI No. 0 or equivalent

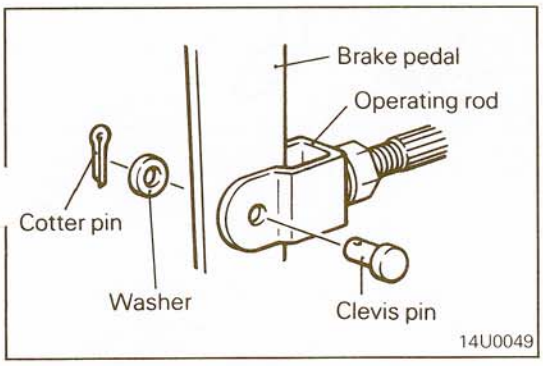

6. APPLICATION OF GREASE TO CLEVIS PIN

Apply specified grease to the clevis pin.

Specified grease: Multipurpose grease SAE J310, NLGI No. 0 or equivalent

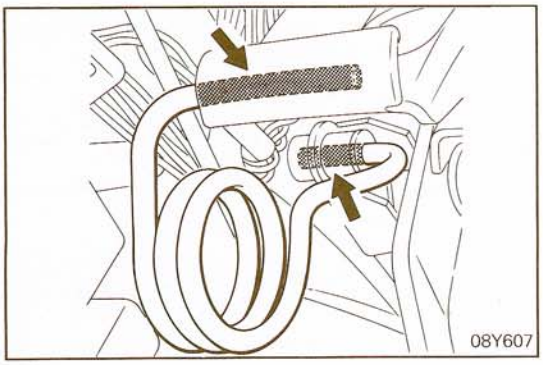

3. APPLICATION OF GREASE TO RETURN SPRING

Apply specified grease to the return spring.

Specified grease: Multipurpose grease SAE J310, NLGI No. 0 or equivalent

NOTE
When installing the return spring, install the pedal side first and then depress the pedal and install the pedal support side.

CLUTCH MASTER CYLINDER AND LINE

N06MA--

REMOVAL AND INSTALLATION

Pre-removal Operation
- Draining Clutch Fluid

Post-installation Operation
- Refilling Clutch Fluid
- Bleeding Clutch Line (Refer to P.6-7.)
- Adjustment of Clutch Pedal (Refer to P.6-6.)

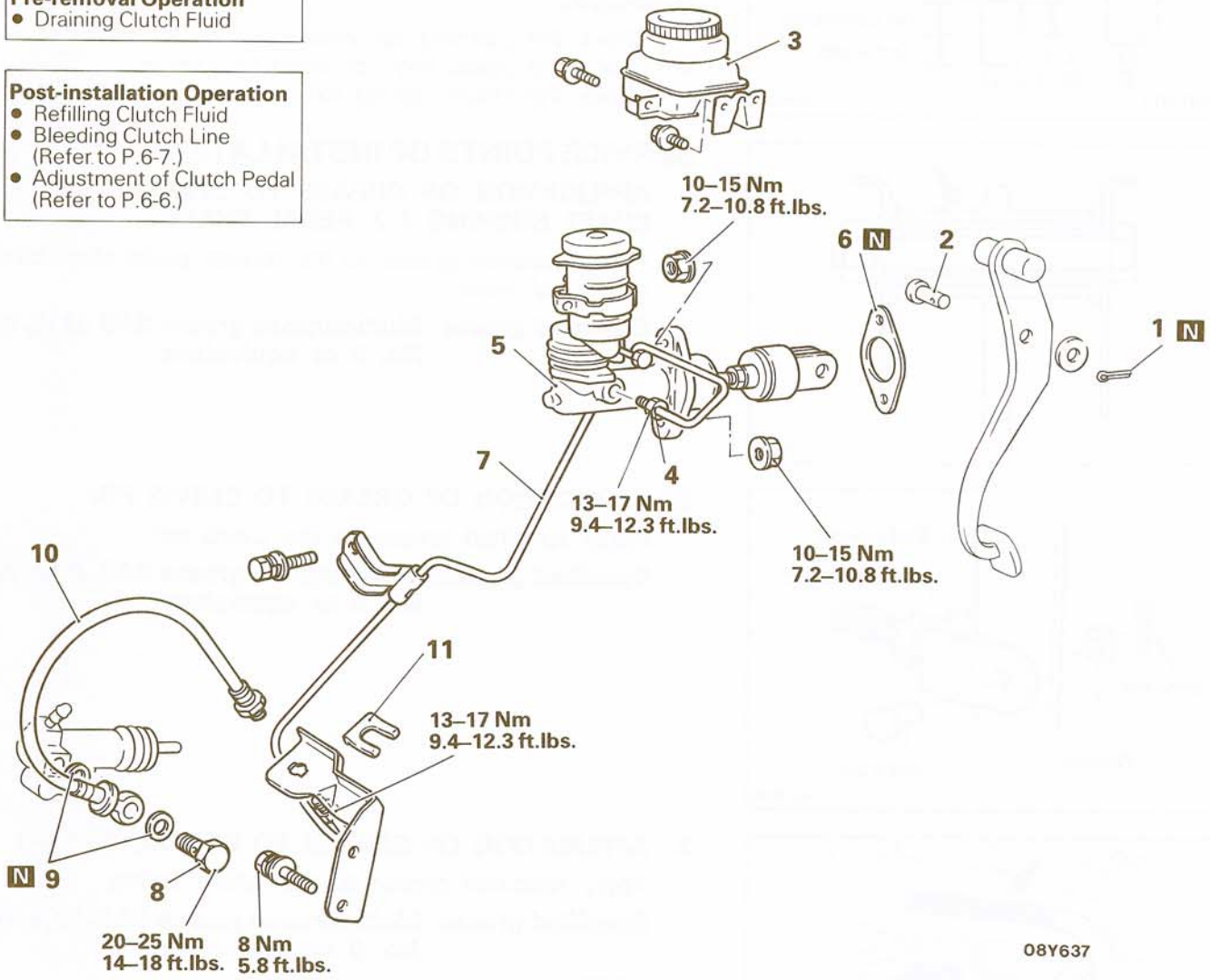

08Y637

Clutch master cylinder removal steps

1. Split pin
2. Clevis pin
3. Brake fluid reservoir
4. Clutch tube connection
5. Clutch master cylinder
6. Gasket

Clutch line removal steps

7. Clutch tube
8. Eye bolt
9. Gasket
10. Clutch hose
11. Clip

NOTE
(1) Reverse the removal procedures to reinstall.
(2) ◆◆: Refer to "Service Points of Removal".
(3) ◆◆: Refer to "Service Points of Installation".
(4) N: Non-reusable parts

STB Revision

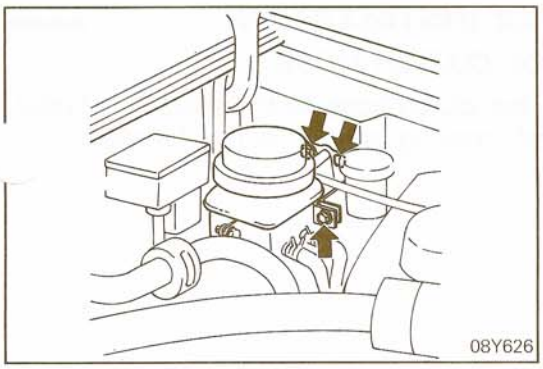

SERVICE POINTS OF REMOVAL N06MBAC

3. REMOVAL OF BRAKE FLUID RESERVOIR

Remove the brake fluid reservoir bracket attaching bolts and slide the reservoir aside.

Caution
Do not pull the brake hoses firmly or kink them.

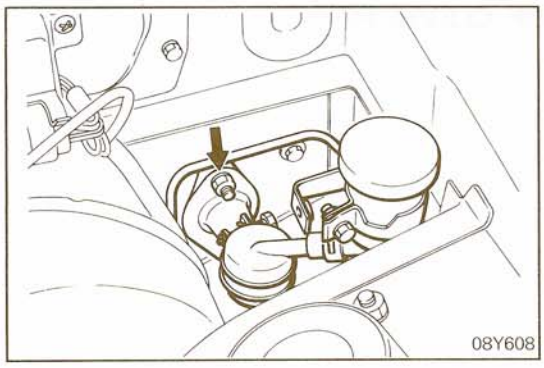

5. REMOVAL OF CLUTCH MASTER CYLINDER

Remove the clutch master cylinder.

NOTE
The master cylinder attaching nut (lower) is located in the compartment.

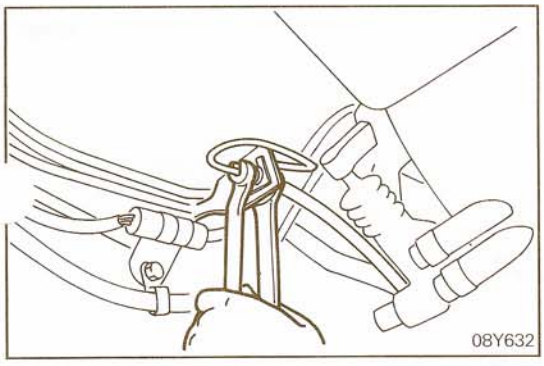

7. REMOVAL OF CLUTCH TUBE

Holding the clutch hose side nut, loosen the clutch tube flare nut.

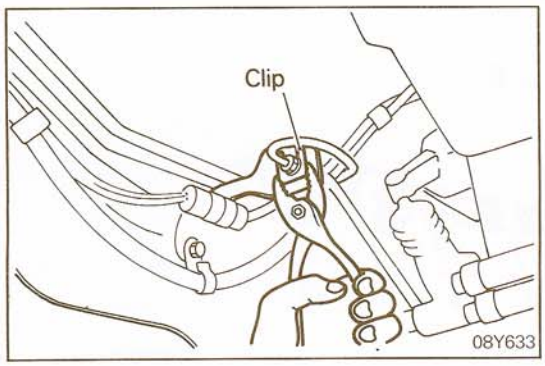

Pull out the clutch hose clip and remove the clutch hose from the backet.

8. REMOVAL OF EYE BOLT

Refer to P.6-14.

INSPECTION N06MCAC

- Check the clutch tube for cracks, crimps and corrosion.
- Check the clutch hose for cracks, damage and leakage.
- Check the clutch tube flare nuts for damage and leakage.

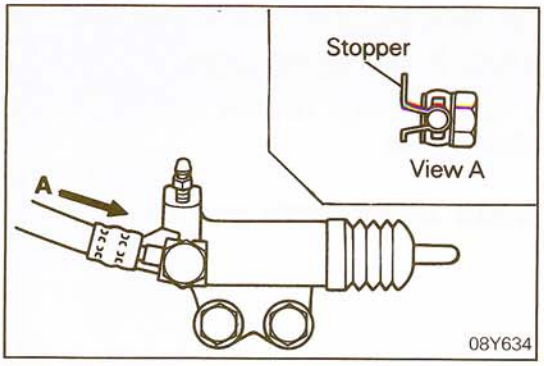

SERVICE POINTS OF INSTALLATION

N06MDAD

10. INSTALLATION OF CLUTCH HOSE

When connecting the clutch hose to the release cylinder, install as illustrated, making sure it is not twisted.

2. INSTALLATION OF CLEVIS PIN

Refer to P.6-9.

CLUTCH MASTER CYLINDER AND LINE

N06NA--

DISASSEMBLY AND REASSEMBLY

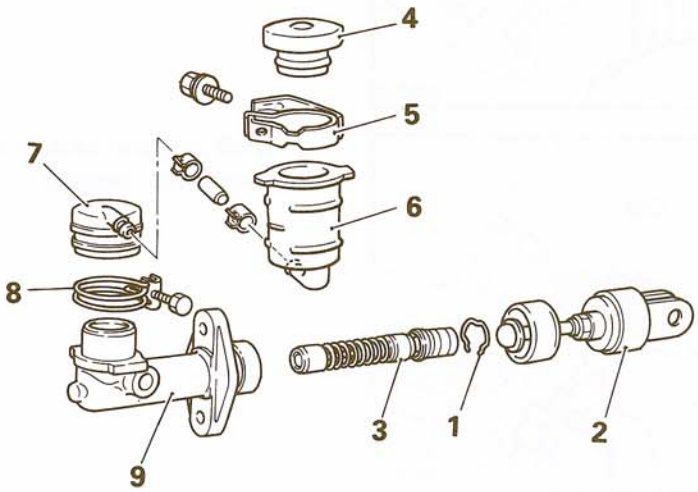

Disassembly steps

- ◆◆ 1. Piston stop ring
- 2. Damper and push rod
- ◆◆ ◆◆ 3. Piston assembly
- 4. Reservoir cap
- 5. Reservoir bracket
- 6. Reservoir
- ◆◆ 7. Nipple
- 8. Reservoir band
- 9. Master cylinder body

NOTE
(1) Reverse the disassembly procedures to reassemble.
(2) ◆◆: Refer to "Service Points of Disassembly".
(3) ◆◆: Refer to "Service Points of Reassembly".

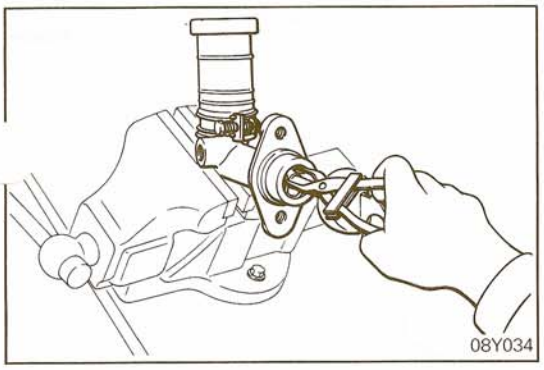

SERVICE POINTS OF DISASSEMBLY N06NBAA

1. REMOVAL OF PISTON STOP RING

Remove the piston stop ring.

3. REMOVAL OF PISTON ASSEMBLY

Pull out the piton assembly.

Caution
Do not damage the master cylinder body and piston assembly.
Do not disassemble the piston assembly.

INSPECTION N06NCAA

- Check for rust or scars inside cylinder body.
- Check piston cup for wear or deformation.
- Check piston or rust or scars.

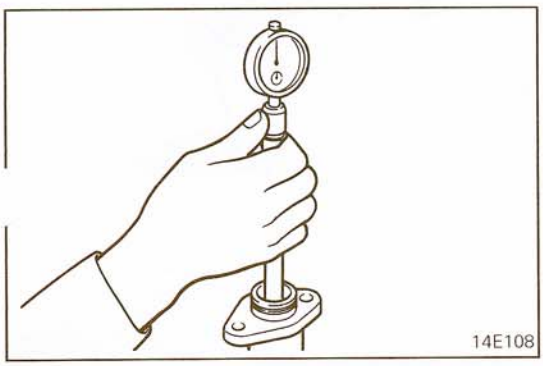

CLEARANCE BETWEEN MASTER CYLINDER INNER DIAMETER AND PISTON OUTER DIAMETER

(1) Measure the master cylinder inside diameter and the piston outside diameter with a cylinder gauge and a micrometer.

Limit: 0.15 mm (0.006 in.)

NOTE
Measure the inside diameter of the master cylinder at three places (bottom, middle, and top), each in two perpendicular directions.

(2) If the master cylinder-to-piston clearance exceeds the limit, replace the master cylinder and/or piston assembly.

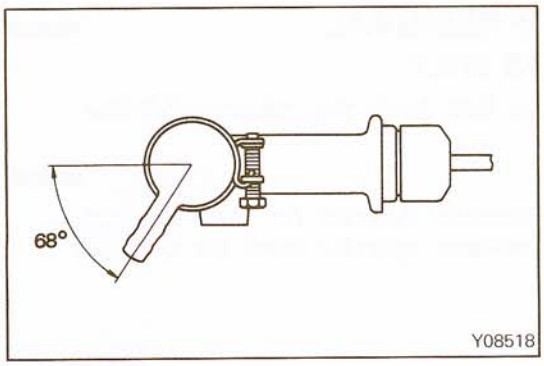

SERVICE POINTS OF REASSEMBLY N06NDAE

7. INSTALLATION OF NIPPLE

Install the nipple and band as shown in the illustration.

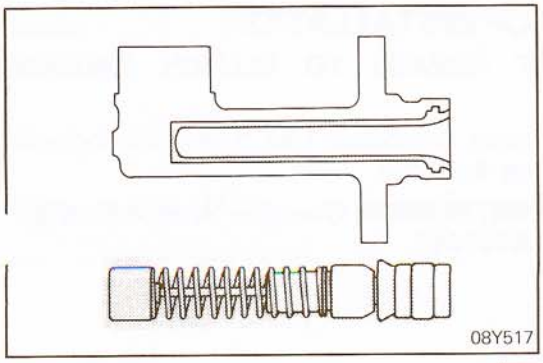

3. APPLICATION OF CLUTCH FLUID TO PISTON ASSEMBLY

Apply specified clutch fluid to the inner surface of the cylinder and to the entire periphery of the piston assembly.

Specified clutch fluid: Brake fluid DOT 3

STB Revision

CLUTCH RELEASE CYLINDER

N06HA--

REMOVAL AND INSTALLATION

Pre-removal Operation
- Draining Clutch Fluid

Post-installation Operation
- Refilling Clutch Fluid
- Bleeding Clutch Line (Refer to P.6-7.)
- Adjustment of Clutch Pedal (Refer to P.6-6.)

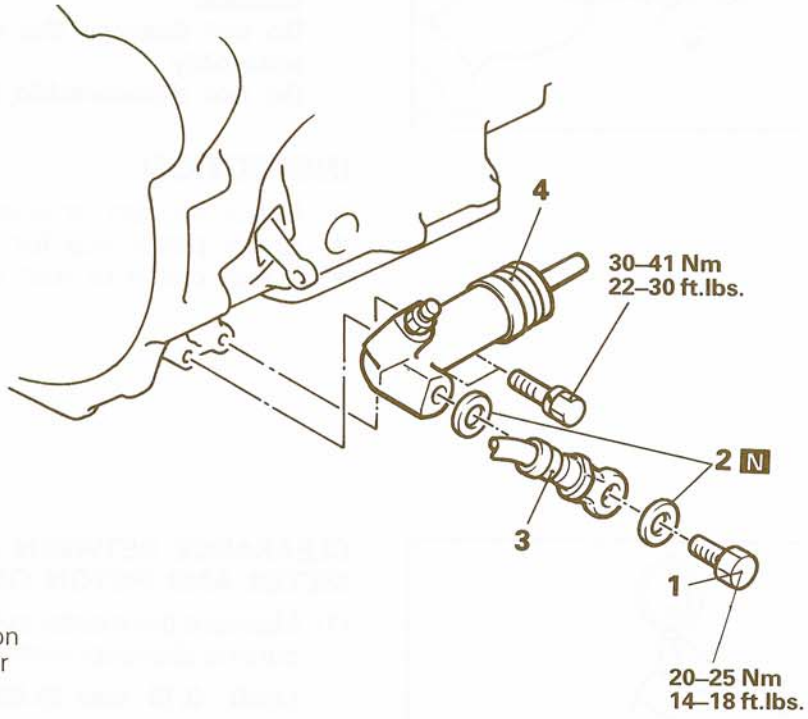

Removal steps
1. Eye bolt
2. Gasket
3. Clutch hose connection
4. Clutch release cylinder

NOTE
(1) Reverse the removal procedures to reinstall.
(2) ◆◆: Refer to "Service Points of Removal".
(3) ◆◆: Refer to "Service Points of Installation".
(4) N: Non-reusable parts

08W520

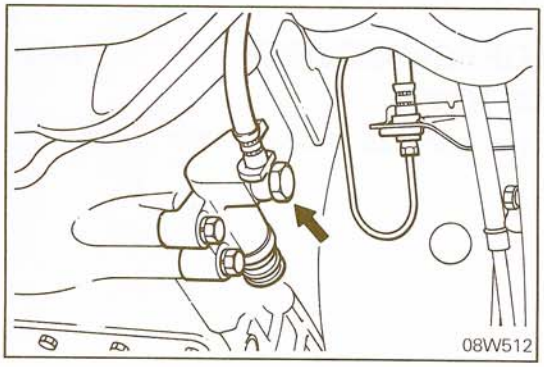

SERVICE POINT OF REMOVAL

N06HBAB

1. REMOVAL OF EYE BOLT

Disconnect the eye bolt from the release cylinder.

INSPECTION

N06HCAA

- Check the clutch release cylinder for fluid leakage.
- Check the clutch release cylinder boot for damage.

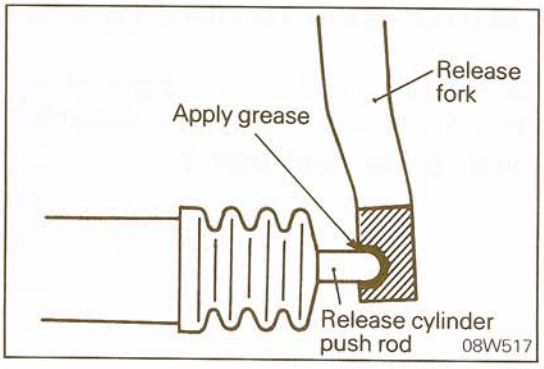

SERVICE POINTS OF INSTALLATION

N06HDAC

4. APPLICATION OF GREASE TO CLUTCH RELEASE CYLINDER

Apply specified grease to release fork to release cylinder push rod contacting surfaces.

Specified grease: MITSUBISHI Genuine Grease Part No 0101011

STB Revision

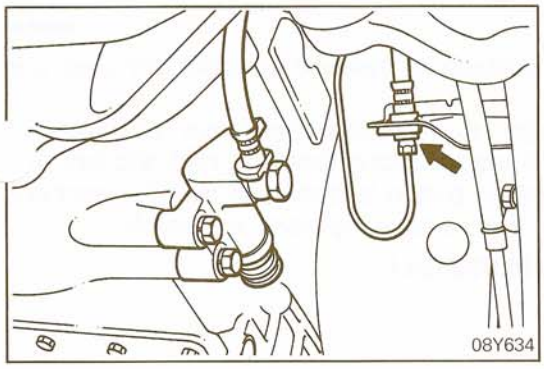

3. INSTALLATION OF CLUTCH HOSE

Connect the clutch hose to the release cylinder at the stepped portion shown in the illustration.

1. INSTALLATION OF EYE BOLT

Bleed the system. (Refer to P.6-7.)

CLUTCH RELEASE CYLINDER

N06LA--

DISASSEMBLY AND REASSEMBLY

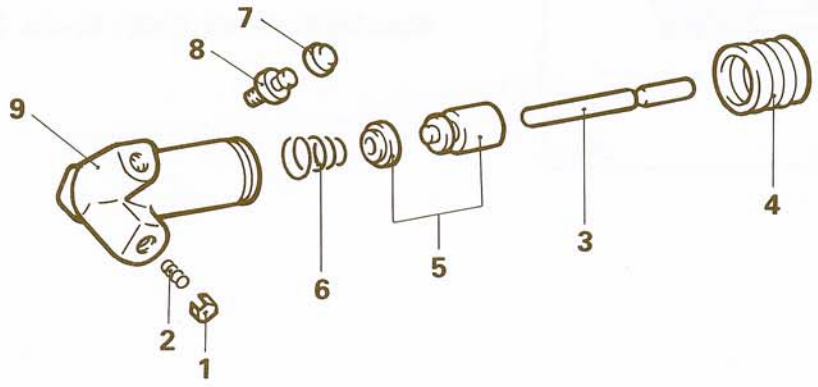

08Y638

Disassembly steps

1. Valve plate
2. Spring
3. Push rod
4. Boot
5. Piston and cup ◀■ ■▶
6. Conical spring
7. Bleeder screw
8. Bleeder plug
9. Release cylinder

NOTE
(1) Reverse the disassembly procedures to reassemble.
(2) ◀■: Refer to "Service Points of Disassembly".
(3) ■▶: Refer to "Service Points of Reassembly".

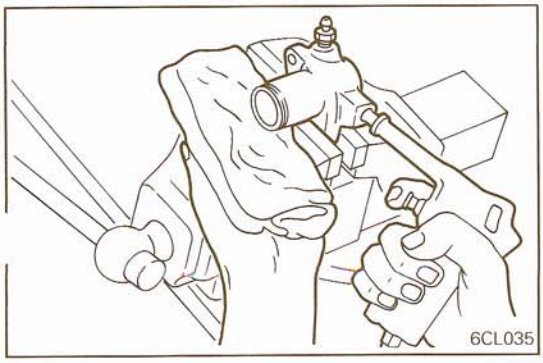

SERVICE POINT OF DISASSEMBLY

N06LBAC

5. REMOVAL OF PISTON AND CUP

Use compressed air to remove the piston and cup from the release cylinder.

Caution

1. **Cover the cylinder bore with rag to prevent the piston from jumping out of the bore.**
2. **Apply compressed air gradually to avoid possible scattering of clutch fluid.**

STB Revision

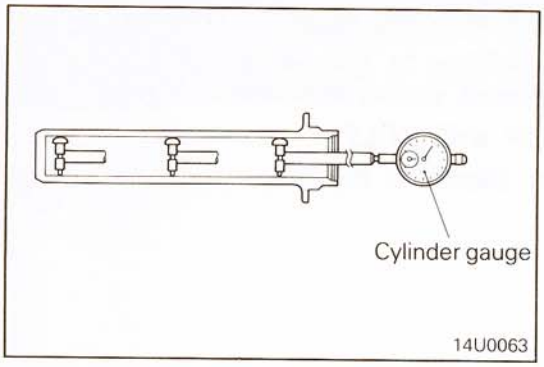

INSPECTION

N06LCAA

- Check the inner surface of release cylinder for rust and damage.
- Use cylinder gauge to measure the inner diameter release cyliner at three locations (bottom, mid and brim). the clearance between piston and release cylinder exceeds the limit, replace the release cylinder assembly.

Limit: 0.15 mm (0.006 in.)

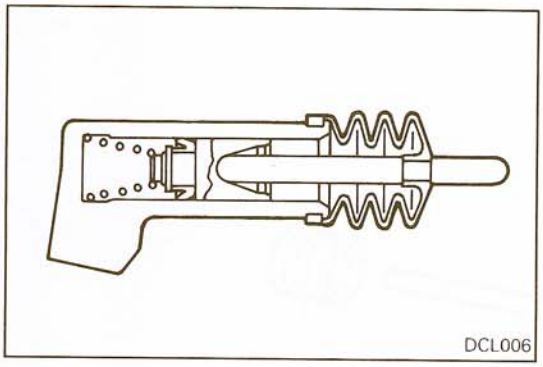

SERVICE POINT OF REASSEMBLY

N06LDAD

5. INSTALLATION OF PISTON AND CUP

Apply specified clutch fluid to the inner surface of release cylinder body and the peripheries of piston and piston cup before inserting the piston and cup assembly.

Specified clutch fluid: Brake fluid DOT 3

CLUTCH DISC AND RELEASE FORK

N06QA--

REMOVAL AND INSTALLATION

Pre-removal Operation
- Draining Clutch Fluid
- Draining Transmission Oil

Post-installation Operation
- Refilling Clutch Fluid
- Bleeding Clutch Line (Refer to P.6-7.)
- Refilling Transmission Oil (Refer to P.6-6.)

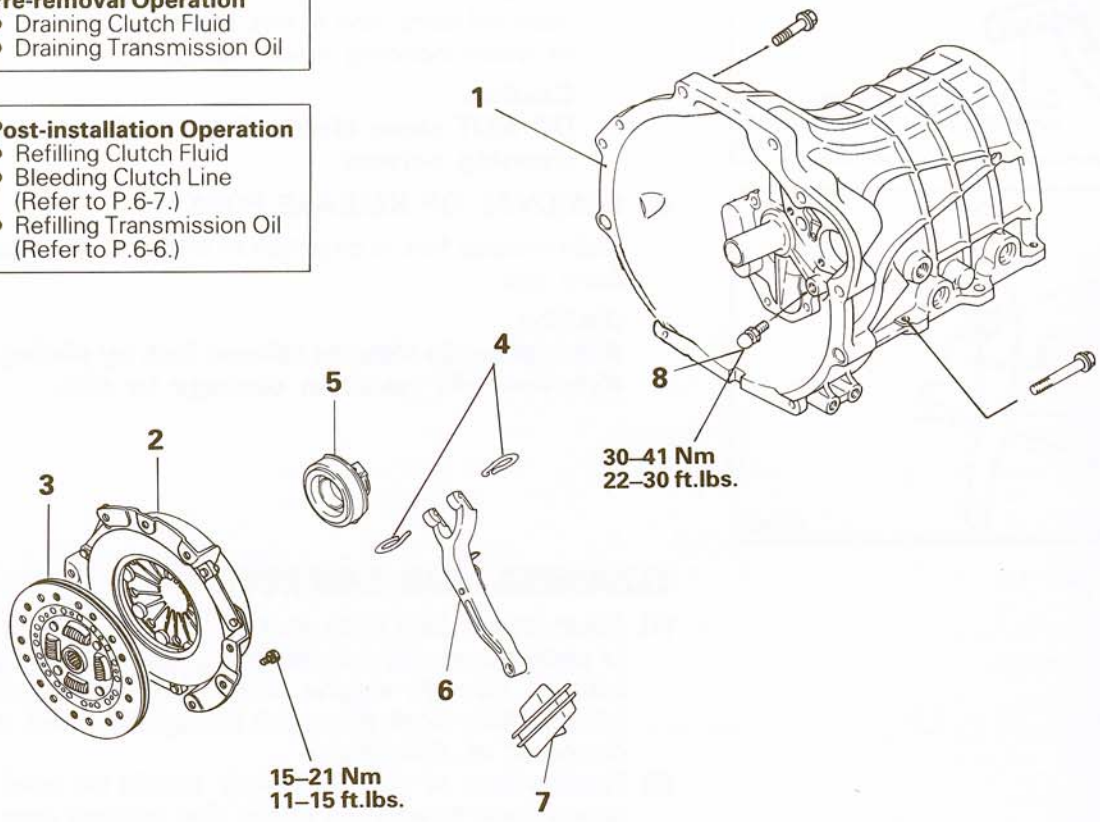

5CL020

Removal steps

◀▶ 1. Transmission assembly
◀▶ ▶◀ 2. Clutch cover assembly
▶◀ 3. Clutch disc
4. Return clip
▶◀ 5. Clutch release bearing
◀▶ ▶◀ 6. Release fork
7. Release fork boot
8. Fulcrum

NOTE
(1) Reverse the removal procedures to reinstall.
(2) ◀▶: Refer to "Service Points of Removal".
(3) ▶◀: Refer to "Service Points of Installation".

SERVICE POINTS OF REMOVAL

N06QBAA

1. REMOVAL OF TRANSMISSION ASSEMBLY

Refer to GROUP 21 TRANSMISSION – Transmission.

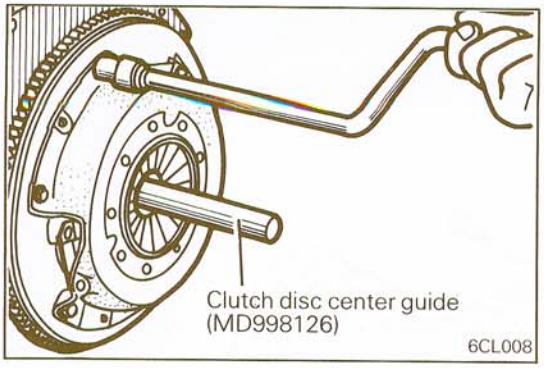

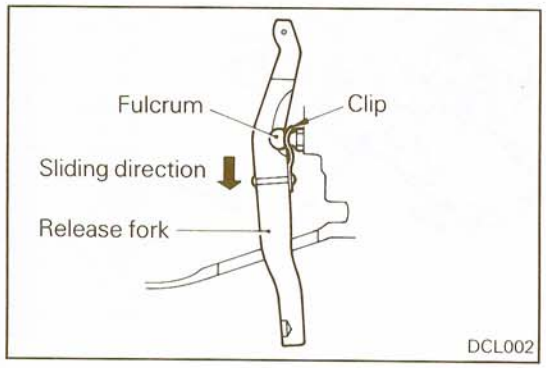

2. REMOVAL OF CLUTCH COVER ASSEMBLY

(1) Insert clutch disc center guide (MD998126), or main drive gear of transmission in center spline to prevent dropping of clutch disc.

(2) Diagonally loosen bolts retaining clutch cover to wheel.

Back off bolts, one or two turns at a time, in succession, to avoid bending cover flange.

Caution
DO NOT clean clutch disc or release bearing with cleaning solvent.

6. REMOVAL OF RELEASE FORK

Slide release fork in direction of arrow to disengage fulcrum from clip.

Caution
Attempting to remove release fork by sliding it in other direction will result in damage to clip.

CLEANING AND INSPECTION N06QCAA

(1) Clean clutch dust from clutch housing with vacuum brush or shop towel. Do not use compressed air. Inspect for oil leakage through engine rear main bearing oil seal and transmission front oil seal. If leakage is noted, it should be corrected at this time.

(2) Friction face of pressure plate should be have a uniform appearance throughout entire disc contact area. If there is evidence of heavy contact on one portion of wear circle and a very light contact 180 degrees from that portion, pressure plate may be improperly mounted or sprung.

(3) Friction face of flywheel should also be free from excessive discoloration, burned areas, small cracks, deep grooves, or ridges.

(4) The disc assembly should be handled without touching facings. Replace disc if facings show evidence of grease or oil soakage.

(5) Measure rivet sink, and if it is below the limit, replace clutch disc.

Limit: 0.3 mm (0.012 in.)

The hub splines and splines on transmission input shaft should be a snug fit without signs of excessive wear. Metallic portions of disc assembly should be dry and clean and show no evidence of having been hot. Each of the arched springs between facings should be unbroken and all rivets should be tight.

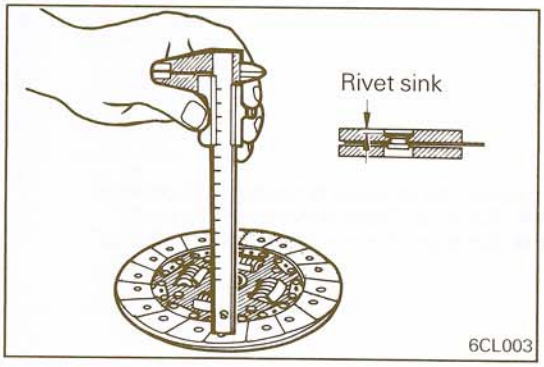

(6) Wipe friction surface of pressure plate with a cleaning solvent.

(7) Using a straight edge, check pressure plate for flatness. The pressure plate friction area should be flat within 0.5 mm (0.020 in.) and free from discoloration, burned are cracks, grooves or ridges.

(8) Visually inspect the cover outer mounting flange for flatness. It should be free of nicks, burrs, dents or other damage.
(9) The three dowels on the flywheel should be tight and undamaged.
The cover stamping should be a snug fit on the dowels.
(10) If the clutch assembly does not meet these requirements, it should be replaced.
(11) Check the clutch release cylinder for fluid leakage.
(12) Check the clutch release cylinder boot for damage.

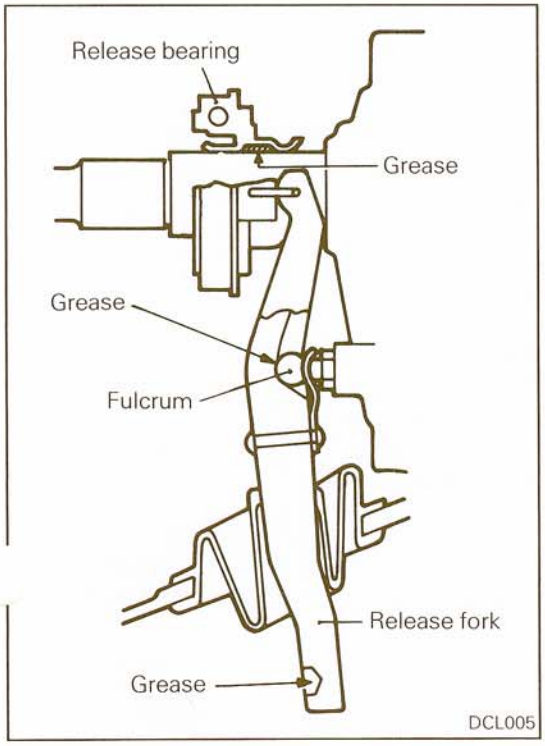

SERVICE POINTS OF INSTALLATION N06QDAA

6. APPLICATION OF GREASE TO RELEASE FORK

Pack the release fork fulcrum hole and release cylinder push rod hole with grease.

Specified grease: MITSUBISHI Genuine Grease Part No. 0101011

5. APPLICATION OF GREASE TO CLUTCH BEARING

Pack grease in groove on release bearing I.D.

Specified grease: MITSUBISHI Genuine Grease Part No. 0101011

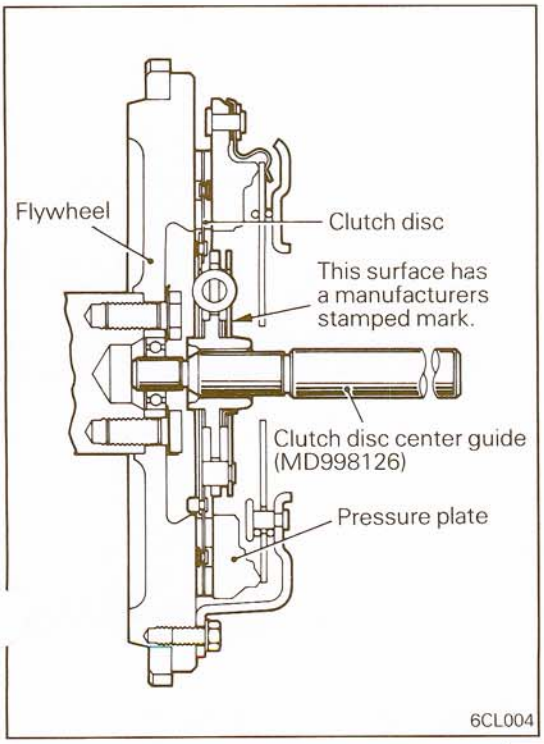

3. INSTALLATION OF CLUTCH DISC / 2. CLUTCH COVER ASSEMBLY

(1) If there are oils or greases on clutch facing and pressure plate, thoroughly wipe away with a dry cloth.
(2) Lightly apply specified grease to clutch disc spline and main drive gear spline of transmission.

Specified grease: MITSUBISHI Genuine Grease Part No. 0101011

(3) Using clutch disc guide (MD998126), or main drive gear of transmission, install clutch disc and clutch cover assembly on flywheel.
(4) When installing clutch disc, be sure that surface having manufacturers stamped mark is on pressure plate side.

Caution
When installing transmission, do not shake it nor install in such a manner that main drive gear is unduly stressed.
Make sure that main drive gear enters clutch disc squarely.

STB Revision

COOLING

CONTENTS

COOLANT TEMPERATURE GAUGE UNIT **28**

COOLING FAN **14**

GENERAL INFORMATION **2**

RADIATOR **17**

SERVICE ADJUSTMENT PROCEDURES **9**

- Engine Coolant Leak Check 9
- Drive Belt Tension Check and Adjustment 11
- Radiator Cap Pressure Test 9
- Specific Gravity Test 9

SPECIAL TOOL **6**

SPECIFICATIONS **4**

- General Specifications 4
- Lubricants 5
- Sealants 6
- Service Specifications 5
- Torque Specifications 5

THERMOSTAT **12**

TROUBLESHOOTING **7**

- Circuit Diagram
- No Rise in Temperature
- Overheat

WATER HOSE AND PIPE **27**

WATER PUMP **22**

GENERAL INFORMATION

N07BAAE

The cooling system consists of a radiator, fan, water pump, thermostat, hose, radiator cap (pressure cap), engine coolant reserve tank, engine coolant temperature sensor, and automatic transmission oil cooler (if equipped).
For vehicles with an intercooler, electric cooling fan is used.

SYSTEM OPERATION

When the cold and hot engines are operated, engine coolant is controlled as shown in the following illustration.

ENGINE COLD

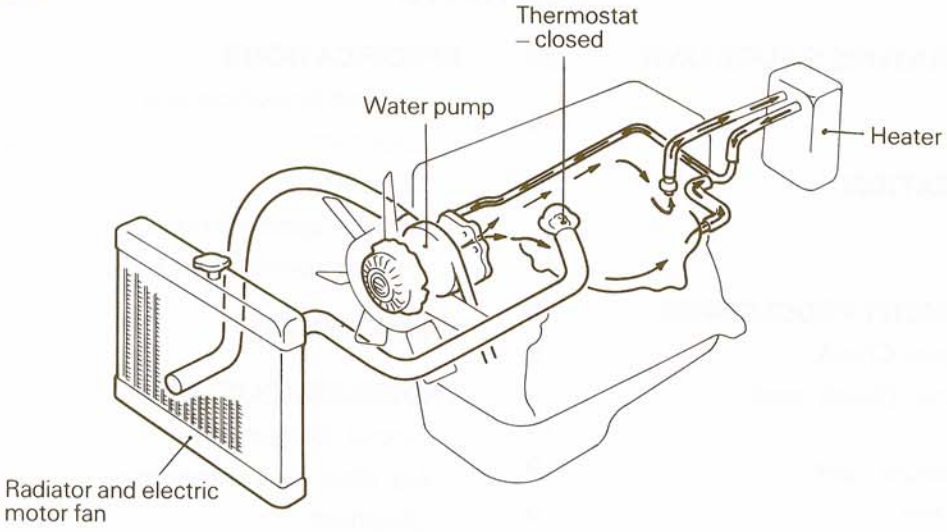

ENGINE HOT

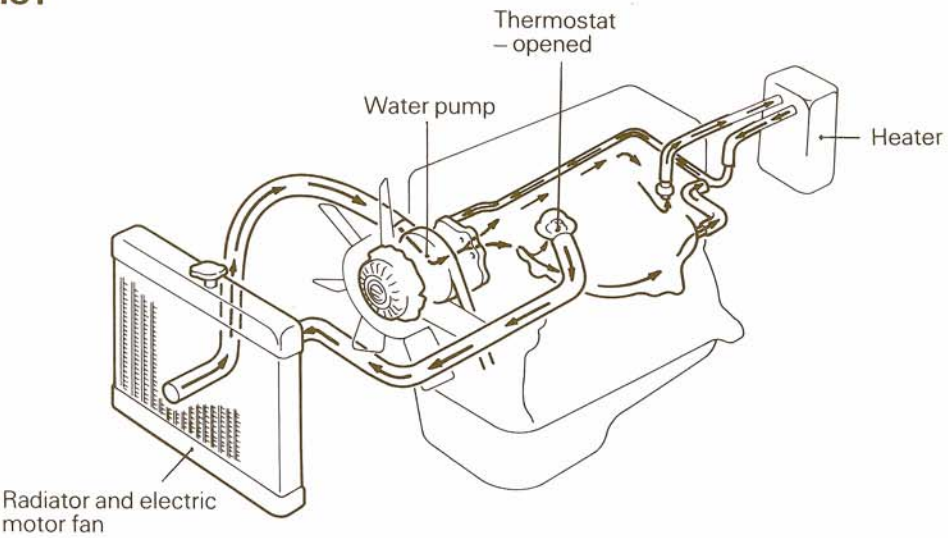

5CO028

The routing and plumbing for turbocharger coolant are as shown below.
To maintain turbocharger, engine coolant is constantly kept flowing through the turbocharger bearing housing water jacket. Water hoses and pipes are laid to provide closed loop flow of engine coolant from the intake manifold to the turbocharger housing to the water inlet pipe.

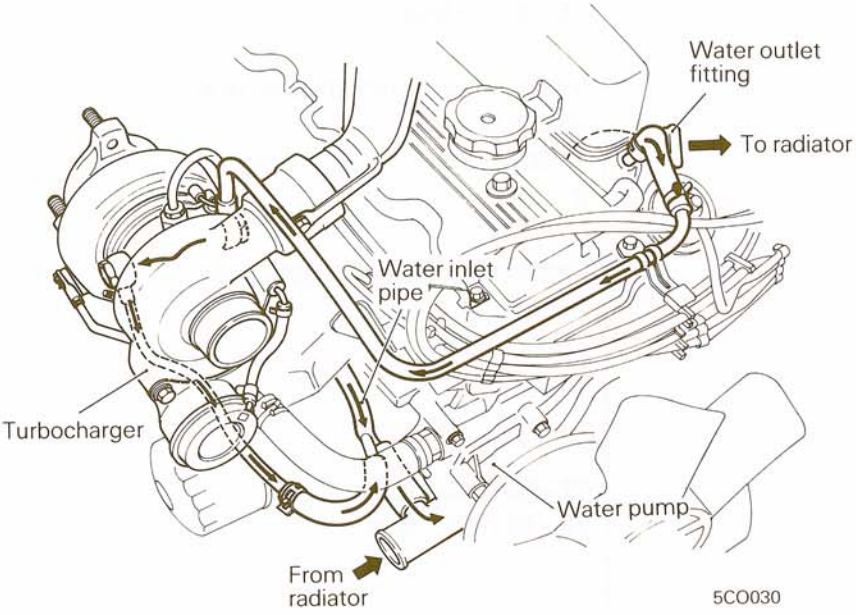

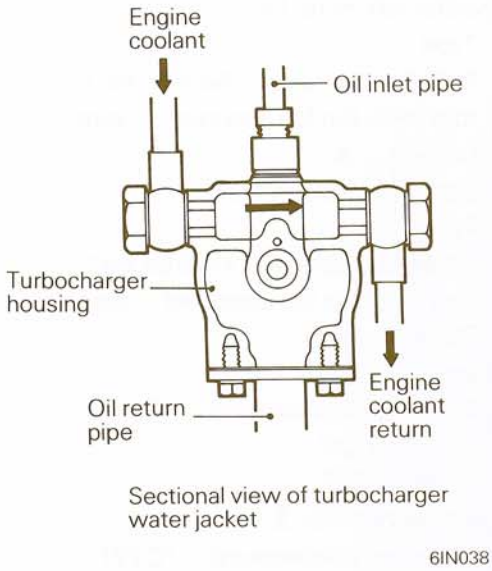

THERMOSTAT

The thermostat housing is located near No. 4 port in the intake manifold so that the thermostat may be removed and inspected easily.
The thermostat is a wax pellet type. The jiggle valve is installed in the air vent located in the thermostat flange. When the engine is not running, it makes easy the bleeding of air from engine coolant. When the engine is running (the thermostat is in closed state), the jiggle valve is closed to reduce the time required for engine warm-up and prevent the engine from overcooling.

WATER PUMP

The water pump consists of a diecast aluminum body, stamped steel impeller, seal and grease-filled bearing shaft. It is driven by the crankshaft pulley through the V-ribbed belt.

SPECIFICATIONS

N07CA--

GENERAL SPECIFICATIONS

Cooling method	Water-cooling, forced circulation type
Radiator	
Type	Pressurized corrugated fin type
Radiator cap	
High pressure valve opening pressure kPa (psi)	74 – 103 (11 – 15)
Vacuum valve opening pressure kPa (psi)	–5 (–0.7) or less
Radiator fan motor No. 1	
Type	Direct current ferrite magnet type
Rated load torque Ncm (in.lbs.)	35.6 (2.6)
rpm (with the fan attached) rpm	1,750 – 2,250
Current A	9 – 11
Radiator fan motor No. 2	
Type	Direct current ferrite magnet type
Rated load torque Ncm (in.lbs.)	20 (1.4)
rpm (with the fan attached) rpm	1,750 – 2,250
Current A	5.7 – 7.7
Thermosensor No. 1	
Operating temperature °C (°F)	
OFF → ON	82 – 88 (180 – 190)
ON → OFF	78 – 87 (172 – 189)
Thermosensor No. 2	
Operating temperature °C (°F)	
OFF → ON	97 – 103 (207 – 217)
ON → OFF	93 – 102 (199 – 216)
Radiator fan motor relay	
Exciting coil rated current A	0.074 – 0.106
Maximum contact current capacity A	20
Range of voltage used V	10 – 15
Voltage drop between terminals V	0.2 or less
Water pump	Impeller of centrifugal type
Cooling fan	
Diameter mm (in.)	410 (16.1)
No. of blades	7
Fan clutch	
Type	Thermostatic controlled fluid coupling
Fan speed	2,800 rpm at pulley speed of 4,000 rpm, 65°C (149°F) or higher 900 rpm at pulley speed of 4,000 rpm, 55°C (131°F) or lower
Thermostat	
Type	Wax type with jiggle valve
Valve opening temperature °C (°F)	88 (190)
Full-opening temperature °C (°F)	100 (212) at valve lift of 8 mm (0.31 in.)
Identification mark	88 (Stamped on flange)
Drive belt	
Length mm (in.)	964 (37.95) HM type

Coolant temperature gauge unit	
Type	Thermistor type
Resistance Ω	104 at 70°C (158°F) 24 at 115°C (284°F)
Coolant temperature sensor for ECI system	
Type	Thermistor type
Resistance Ω	16,200 at –20°C (–4°F) 2,450 at 20°C (68°F) 296 at 80°C (176°F)

SERVICE SPECIFICATIONS

N07CB- -

Standard value	
Opening pressure of radiator cap high pressure valve kPa (psi)	75 – 105 (11 – 15)
Engine coolant concentration %	30 – 60
Limit	
Opening pressure of radiator cap high pressure valve kPa (psi)	65 (9.2)

TORQUE SPECIFICATIONS

N07CC- -

Items	Nm	ft.lbs.
Shroud to radiator (Vehicles with electric cooling fan)	11 – 14	8 – 10
Thermosensor	14 – 16	10 – 12
Alternator support bolt nut	20 – 24	15 – 18
Alternator brace bolt	12 – 14	9 – 10
Water pump to cylinder block bolt	10 – 12	7 – 9
Water pump to cylinder block (alternator brace mounting) bolt	15 – 21	11 – 15
Water pump pulley bolt and nut	10 – 11.5	7 – 8
Coolant temperature gauge unit	30 – 40	22 – 29
Coolant temperature sensor	20 – 40	14.5 – 29
Water outlet fitting	10 – 13	7 – 9.5
Cooling fan (Vehicles without electric cooling fan)	8 – 9.5	6 – 7
Fan clutch (Vehicles without electric cooling fan)	10 – 11.5	7 – 8
Eye bolt for water pipe	35 – 50	25 – 36
Coolant temperature switch (Vehicles with an air conditioner)	10 – 14	7 – 10

LUBRICANTS

N07CD- -

Items	Specified lubricants	Quantity
Engine coolant lit. (U.S.qts., Imp.qts.)	High quality ethylene glycol	* 8.73 (9.22, 7.68)

NOTE
* Includes 0.70 liter (0.74 qt.) in reserve tank

SEALANTS

N07CE- -

Items	Specified sealant	Quantity
Coolant temperature gauge unit	3M Nut Locking No. 4171	As required
Coolant temperature sensor	3M Nut Locking No. 4171	As required
Coolant temperature switch	3M Nut Locking No. 4171	As required

SPECIAL TOOL

N07DA- -

Tool (Number and name)	Use
MIT210863 Small radiator cap test adapter 	Coolant leak check and radiator cap pressure test

TROUBLESHOOTING

N07EAAC

Symptom	Probable cause	Remedy	Reference page
Overheat	Improper engine coolant	Refill	7-9
	Antifreeze concentration too high	Correct anti-freeze concentration	7-9
	Loose or broken drive belt	Replace	7-11
	Inoperative electrical cooling fan (Vehicles with an intercooler only)		
	Faulty thermosensor	Replace	7-19
	Faulty electrical motor	Replace	7-15
	Faulty radiator fan relay	Replace	–
	Damaged or blocked (improper ventilated) radiator fins	Correct	–
	Water leaks		
	Damaged radiator core joint	Replace	7-19
	Corroded or cracked hoses (radiator hose, heater hose, etc.)	Replace	7-19, 7-27
	Loose bolt or leaking gasket in water outlet fitting (thermostat)	Correct or replace	7-12
	Loose water pump mounting bolt or leaking gasket	Correct or replace	7-22 7-25
	Faulty radiator cap valve or setting of spring	Replace	7-9
	Loose cylinder head bolt	Correct	9-41
	Damaged cylinder head gasket	Replace	9-19
	Cracked cylinder block	Replace	9-66
	Cracked cylinder head	Replace	9-41
	Faulty thermostat operation	Replace	7-12
	Faulty water pump	Replace	7-22 7-25
	Water passage clogged with slime or rust deposit or foreign substance	Clean	–
No rise in temperature	Faulty thermostat	Replace	7-12

CIRCUIT DIAGRAM

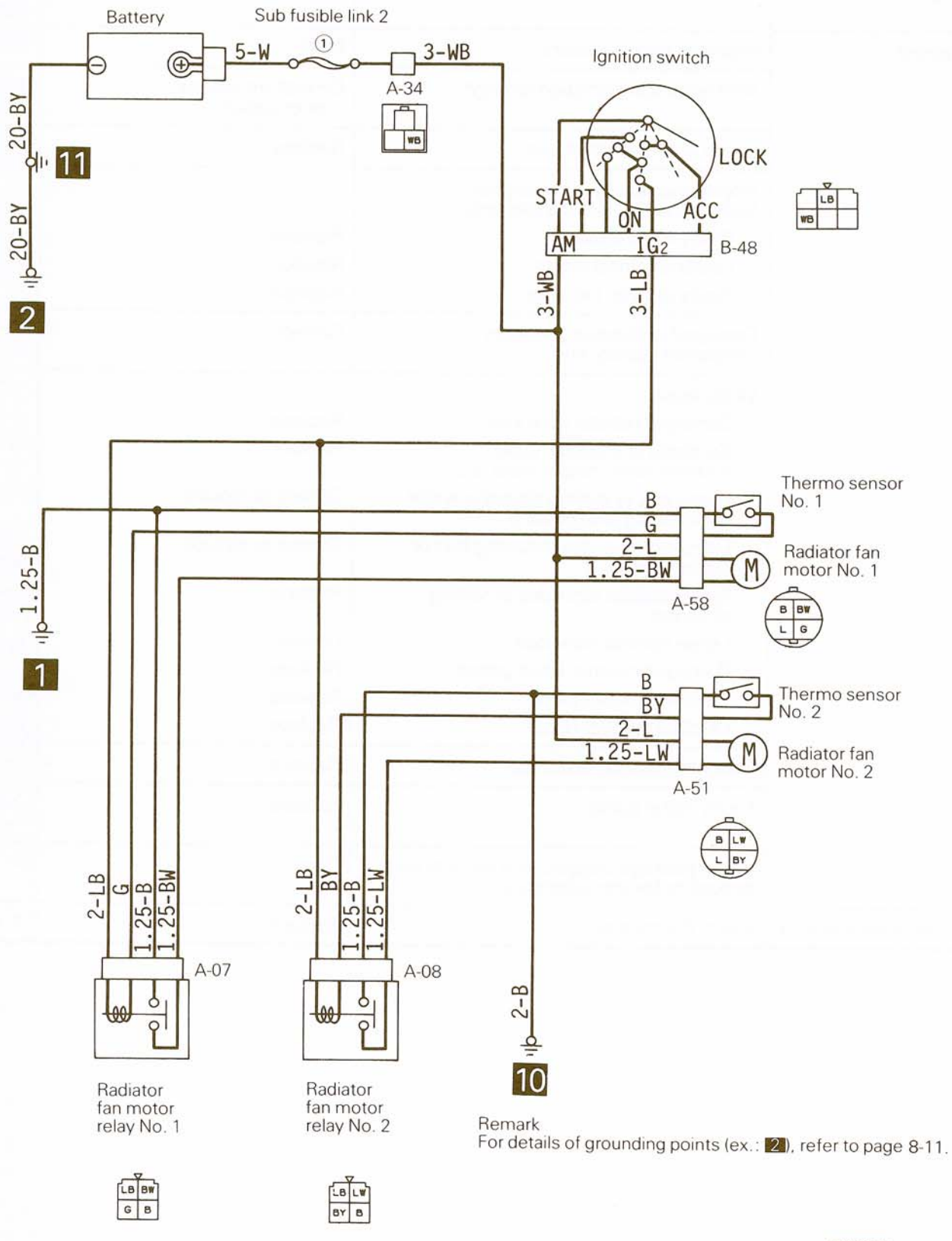

Remark
For details of grounding points (ex.: 2), refer to page 8-11.

37Y603

Wire color code

B: Black	Br: Brown	G: Green	Gr: Gray	L: Blue	Lg: Light green
Ll: Light blue	O: Orange	P: Pink	R: Red	Y: Yellow	W: White

STB Revision

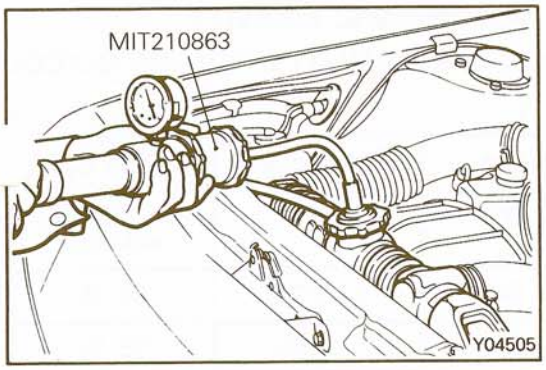

SERVICE ADJUSTMENT PROCEDURES

N07FAAA

ENGINE COOLANT LEAK CHECK

1. Loosen radiator cap.
2. Confirm that the coolant level is up to the filler neck.
3. Using the special tool, install a radiator cap tester to the radiator filler neck and apply 150 kPa (21 psi) pressure. Hold for two minutes in that condition, while checking for leakage from the radiator, hose or connections.

   Caution
   Be sure to completely clean away any moisture from the places checked.
   When the tester is removed, be careful not to spill any coolant from it.
   Be careful, when installing and removing the tester and when testing, not to deform the filler neck of the radiator.
4. If there is leakage, repair or replace the appropriate part.

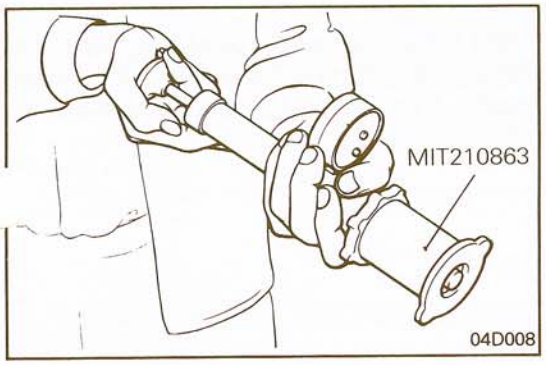

RADIATOR CAP PRESSURE TEST

N07FBAF

1. Use a special tool to attach the cap to the tester.
2. Increase the pressure until the indicator of the gauge stops moving.

   High pressure valve opening pressure:
   Limit 65 kPa (9.2 psi)
   Standard value 75 – 105 kPa (11 – 15 psi)
3. Check that the pressure level is maintained at or above the limit.
4. Replace the radiator cap if the reading does not remain at or above the limit.

   NOTE
   Be sure that the cap is clean before testing, since rust or other foreign material on the cap seal will cause an improper indication.

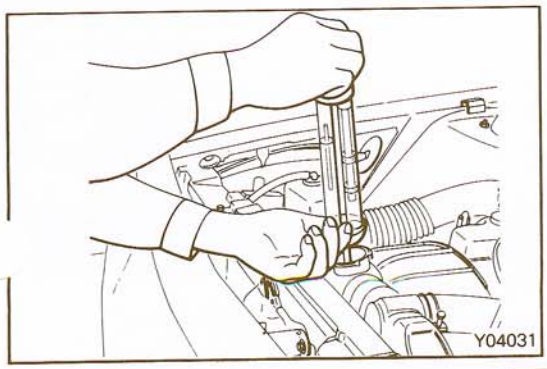

SPECIFIC GRAVITY TEST

N07FDAD

1. Measure the specific gravity of the engine coolant with a hydrometer.
2. Measure the engine coolant temperature, and calculate the concentration from the relation between the specific gravity and temperature, using the following table for reference.

   Standard value: 30 – 60 %

RELATION BETWEEN ENGINE COOLANT CONCENTRATION AND SPECIFIC GRAVITY

The following table is applicable only to the specified engine coolant, HIGH QUALITY ETHYLENE GLYCOL (ANTIFREEZE) COOLANT.

Engine coolant temperature °C (°F) and specific gravity					Freezing temperature °C (°F)	Safe operating temperature °C (°F)	Engine coolant concentration (Specific volume)
10 (50)	20 (68)	30 (86)	40 (104)	50 (122)			
1.054	1.050	1.046	1.042	1.036	–16 (3.2)	–11 (12.2)	30 %
1.063	1.058	1.054	1.049	1.044	–20 (–4)	–15 (5)	35 %
1.071	1.067	1.062	1.057	1.052	–25 (–13)	–20 (–4)	40 %
1.079	1.074	1.069	1.064	1.058	–30 (–22)	–25 (–13)	45 %
1.087	1.082	1.076	1.070	1.064	–36 (–32.8)	–31 (–23.8)	50 %
1.095	1.090	1.084	1.077	1.070	–42 (–44)	–37 (–35)	55 %
1.103	1.098	1.092	1.084	1.076	–50 (–58)	–45 (–49)	60 %

Example
The safe operating temperature is –15°C (5°F) when the measured specific gravity is 1.058 at the engine coolant temperature of 20°C (68°F).

Caution

1. **If the concentration of the engine coolant is below 30%, the anti-corrosion property will be adversely affected. In addition, if the concentration is above 60%, both the anti-freeze and engine cooling properties will decrease, affecting the engine adversely. For these reasons, be sure to maintain the concentration level within the specified range.**
2. **Do not use a mixture of different brands of anti-freeze.**

DRIVE BELT TENSION CHECK AND ADJUSTMENT

N07FFAE

Caution

An overtensioned belt could cause not only premature belt wear but also noise and damage to water pump bearing and alternator bearing.

A loose belt also could cause failure of the alternator to generate enough power and consequently a rundown battery.

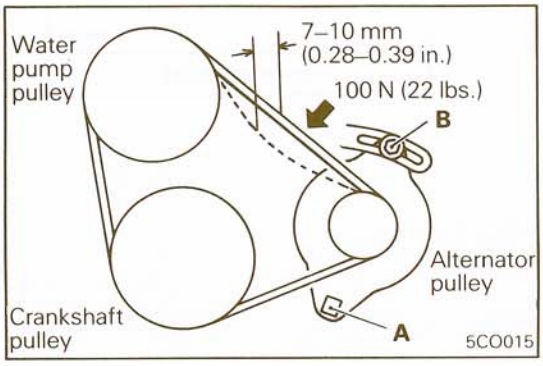

VEHICLES WITHOUT AN AIR CONDITIONER

1. Depress the belt at a midway between water pump pulley and alternator pulley with a force of 100 N (22 lbs.).
2. Measure the belt deflection while depressing for belt tension.
3. If the deflection is not within the specification, adjust as follows:

   Standard value: 7 – 10 mm (0.28 – 0.39 in.)
4. Loosen nut of alternator support bolt "A" and brace bolt "B".
5. Move alternator to tension belt to specifications.
6. Tighten first bolt "B" and then tighten bolt "A" to specified torque.

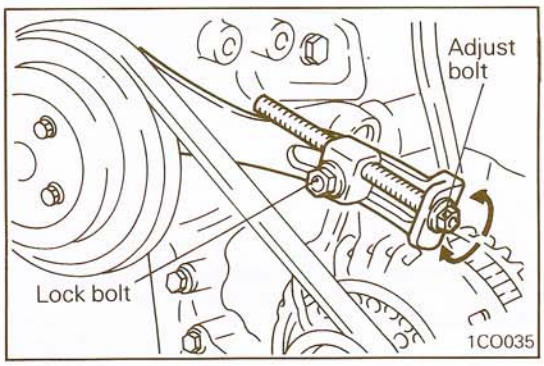

VEHICLES WITH AN AIR CONDITIONER

1. Loosen the nut on the alternator support bolt.
2. Loosen the belt tension adjuster lock bolt.
3. Loosen the belt by turning the adjust bolt.
4. Remove the belt.
5. Install a new belt and adjust the belt tension by turning the adjust bolt.

   Standard value: 7 – 10 mm (0.28 – 0.39 in.)
6. Tighten the lock bolt.
7. Tighten the nut on the alternator support bolt.

THERMOSTAT

N07GB-B

REMOVAL AND INSTALLATION

Pre-removal Operation
- Draining Engine Coolant

Post-installation Operation
- Refilling Engine Coolant

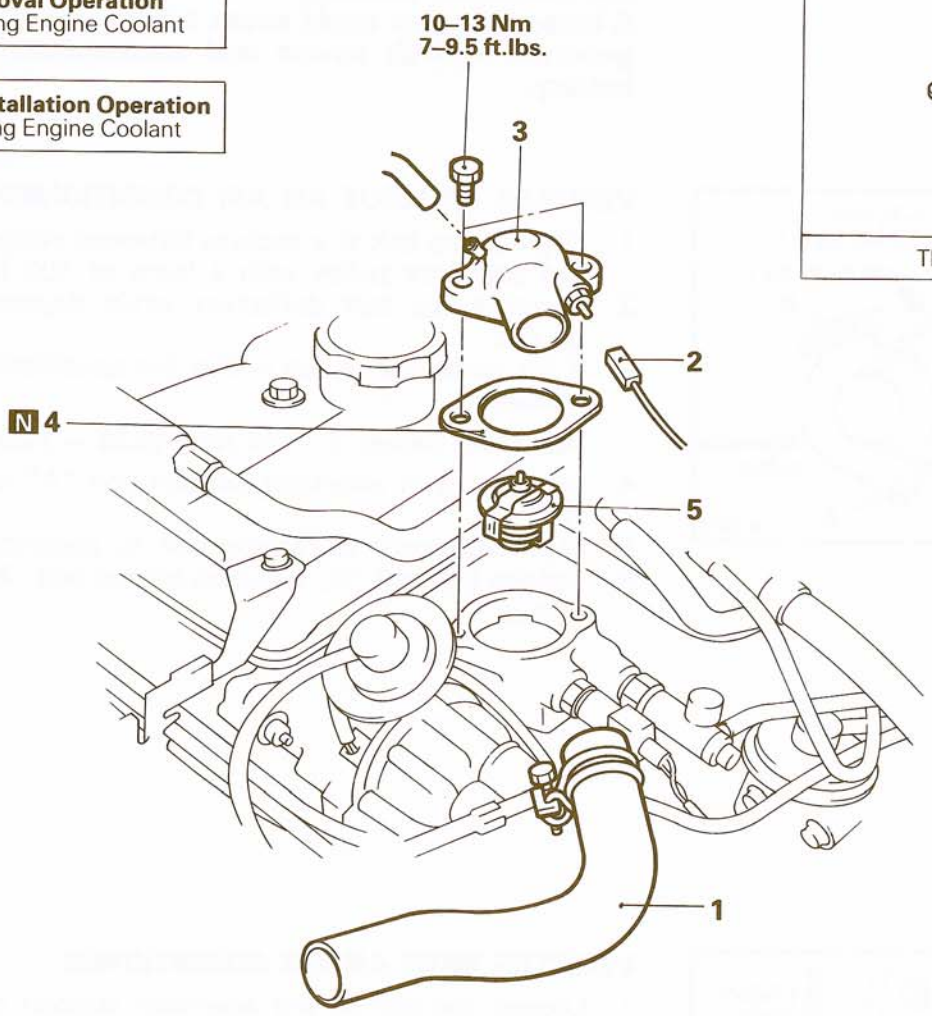

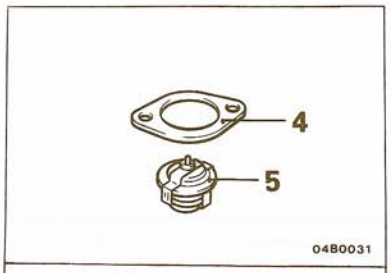

Thermostat kit

Removal steps

1. Radiator upper hose connection
2. Coolant temperature switch connector connection (Vehicles with an air conditioner)
3. Water outlet fitting
4. Water outlet fitting gasket
- ◆◆ 5. Thermostat

NOTE
(1) Reverse the removal procedures to reinstall.
(2) ◆◆: Refer to "Service Points of Installation".
(3) N: Non-reusable parts

04B0030

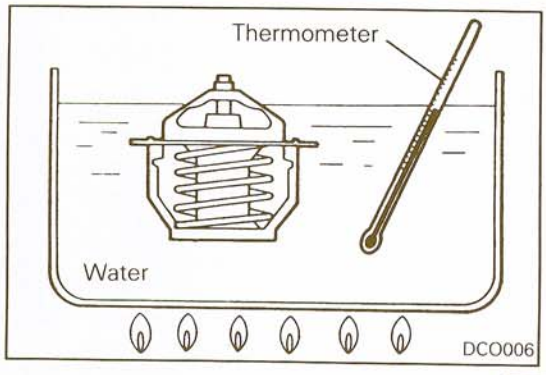

INSPECTION

N07GDAD

- Heat thermostat as shown in illustration.
- Check to see if valve operates properly.
- Check to determine temperature at which valve begins to open.

Valve opening temperature: 88°C (190°F)
Full opening temperature: 100°C (212°F)
Valve lift (at full open): 8 mm (0.31 in.) or more

STB Revision

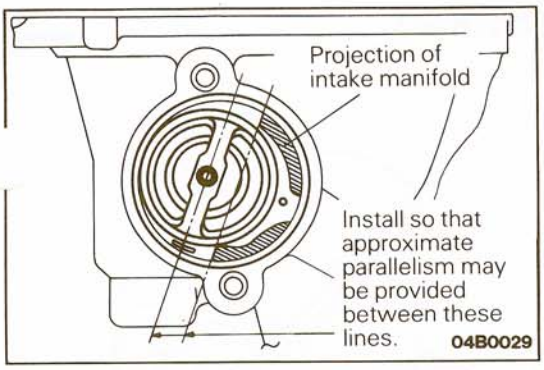

SERVICE POINT OF INSTALLATION N07GEAA

5. INSTALLATION OF THERMOSTAT

Install the thermostat to the intake manifold as illustrated.

Caution
Be careful not to install the thermostat obliquely by fitting the thermostat flange in the spot facing provided in the intake manifold.

COOLING FAN (Vehicles without an Intercooler)

N07HA- -

REMOVAL AND INSTALLATION

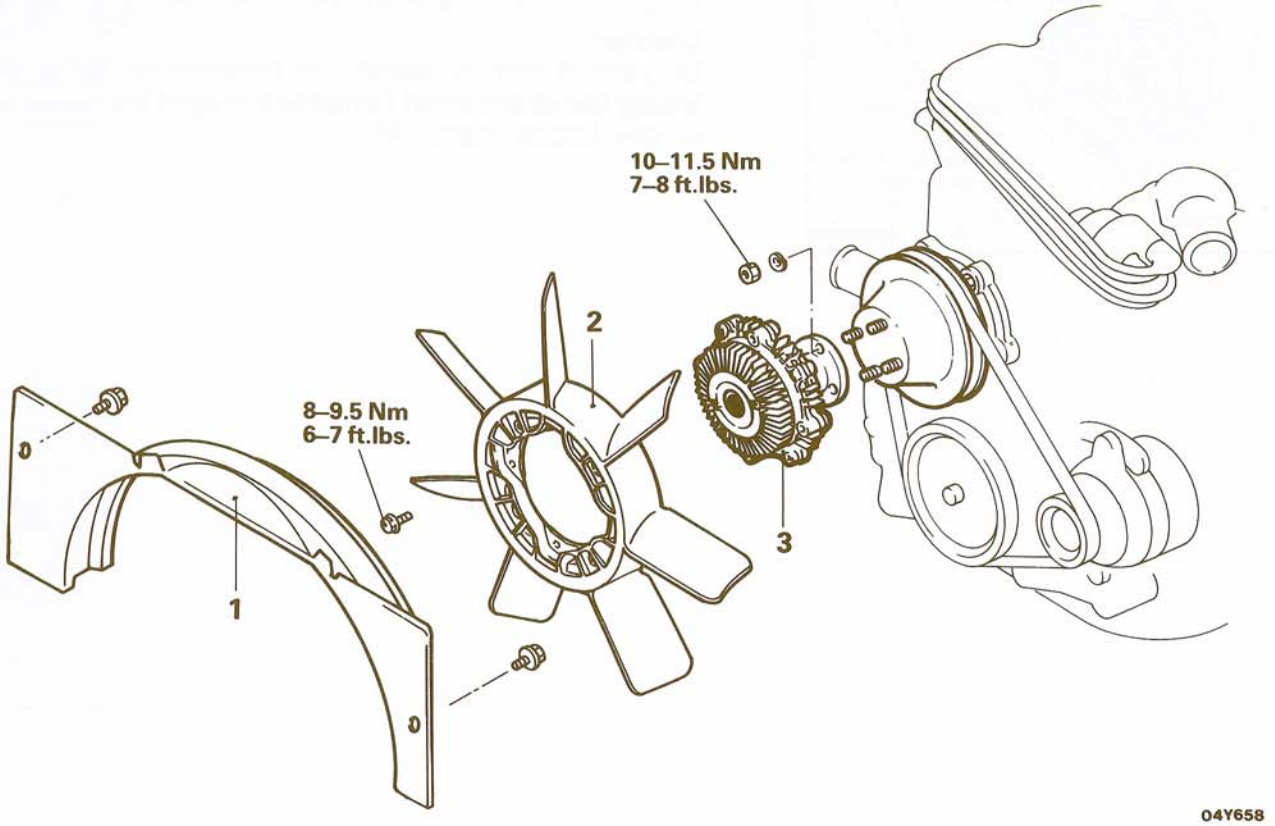

Removal steps

- ◆◆ 1. Upper shroud
- 2. Cooling fan
- 3. Fan clutch

NOTE
(1) Reverse the removal procedures to reinstall.
(2) ◆◆: Refer to "Service Points of Installation".

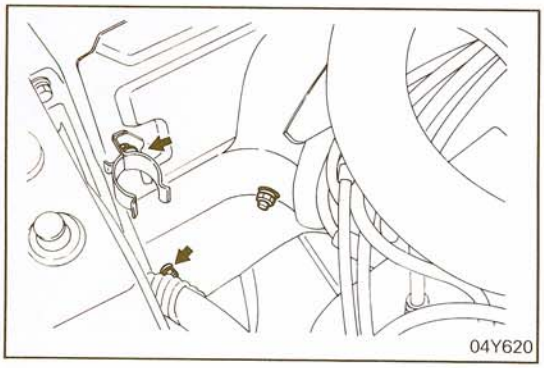

SERVICE POINT OF INSTALLATION

N07HDAA

1. INSTALLATION OF UPPER SHROUD

Install the radiator upper shroud.

Caution
The four flange bolts indicated by arrow (two on each side) must be *6 x 14 mm (0.55 in.) or 6 x 16 mm (0.63 in.) in size. (*: O.D. x length)
Do not use flange bolts which are longer than the above bolt. Use of long flange bolts will result in interference with radiator and water leaks.

COOLING FAN (Vehicles with an Intercooler)

N07HA--

REMOVAL AND INSTALLATION

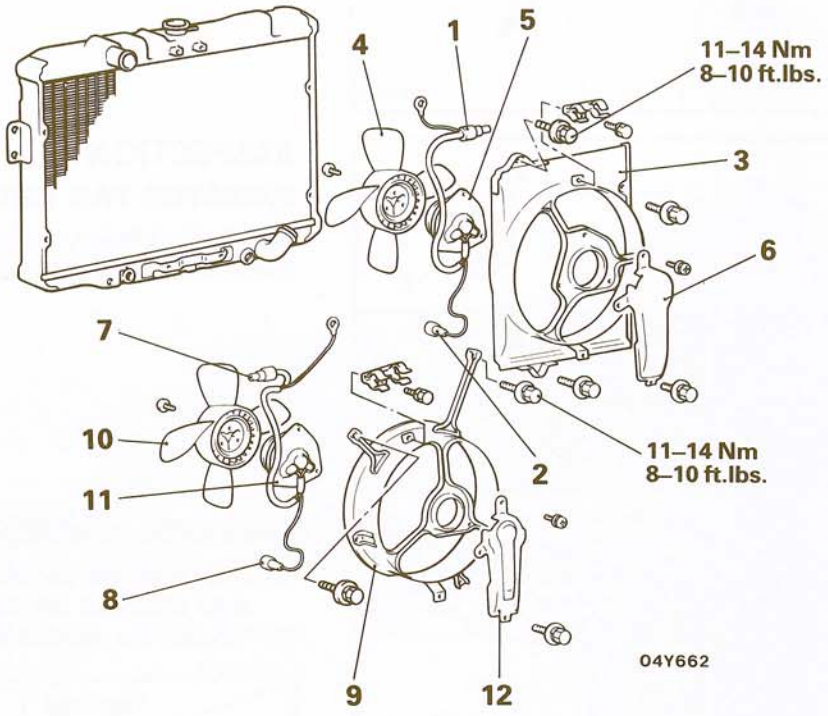

Removal steps

1. Fan motor connection
2. Connector cap
3. Shroud
4. Fan
5. Motor
6. Air duct

Air conditioner fan removal steps

7. Fan motor connection
8. Connector cap
9. Shroud
10. Fan
11. Motor
12. Air duct

NOTE
(1) Reverse the removal procedures to reinstall.
(2) ◀▶: Refer to "Service Points of Removal".
(3) ▶◀: Refer to "Service Points of Installation".

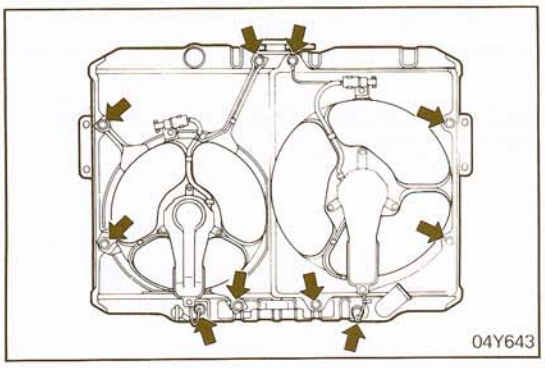

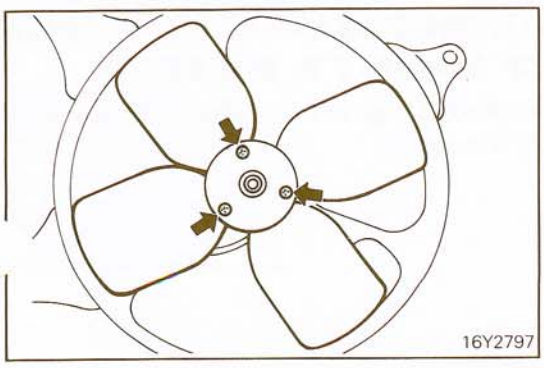

SERVICE POINTS OF REMOVAL

N07HBAB

3. REMOVAL OF SHROUD / 9. SHROUD

Disconnect the radiator fan motor connectors, remove the shroud mounting bolts, then remove the radiator fan motor from the radiator.

4. REMOVAL OF FAN / 10. FAN

Separate the fan from the fan motor.

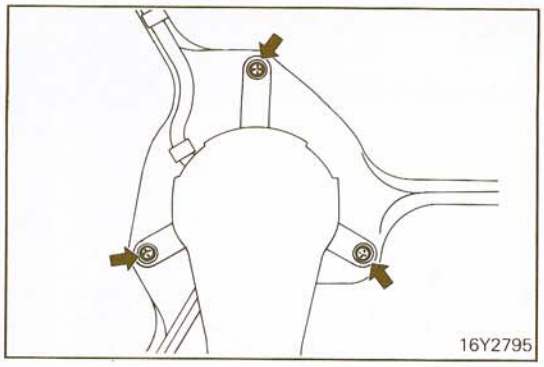

5. REMOVAL OF MOTOR / 11. MOTOR

Remove the motor from the shroud.

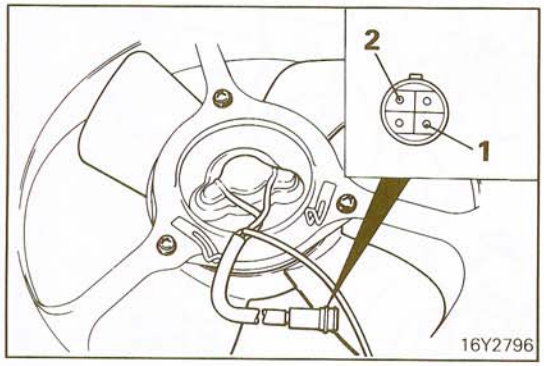

INSPECTION

N07HCAB

RADIATOR FAN MOTOR

Apply the battery voltage to the terminal "1" and ground the terminal "2", then make sure that the motor turns smoothly.

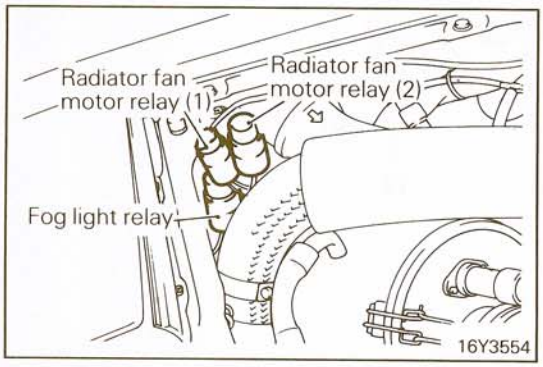

RADIATOR FAN MOTOR RELAY

(1) Remove the radiator fan motor relay from the fuse block, and connect an ohmmeter to the relay side connector.
(2) Check for continuity between the terminals.

Condition \ Terminal	1	2	3	4
When de-energized			○	○
When energized	○	○	⊕	⊖

NOTE
(1) ○–○ indicates that there is continuity between the terminals.
(2) ⊕---⊖ indicates power supply connection.

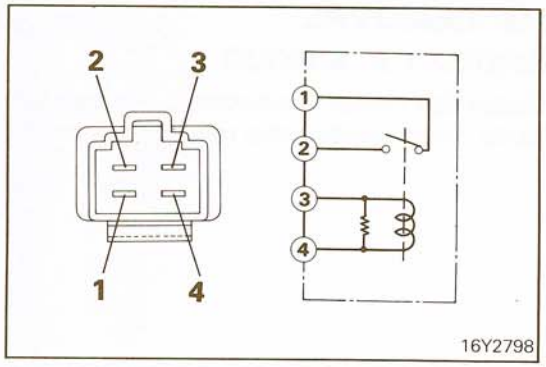

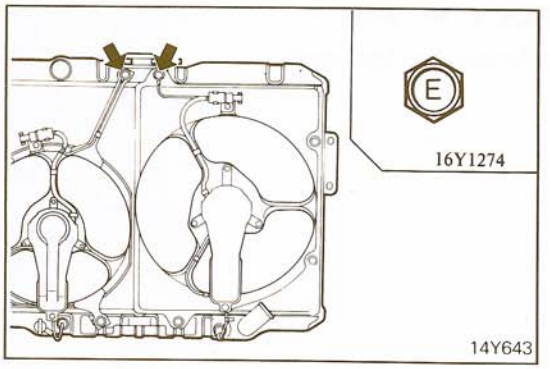

SERVICE POINTS OF INSTALLATION

N07HDAB

3. INSTALLATION OF SHROUD / 9. SHROUD

When installing the shroud, tighten also the radiator motor ground wires with the bolts.

RADIATOR (Vehicles without an Intercooler)

N07QA--

REMOVAL AND INSTALLATION

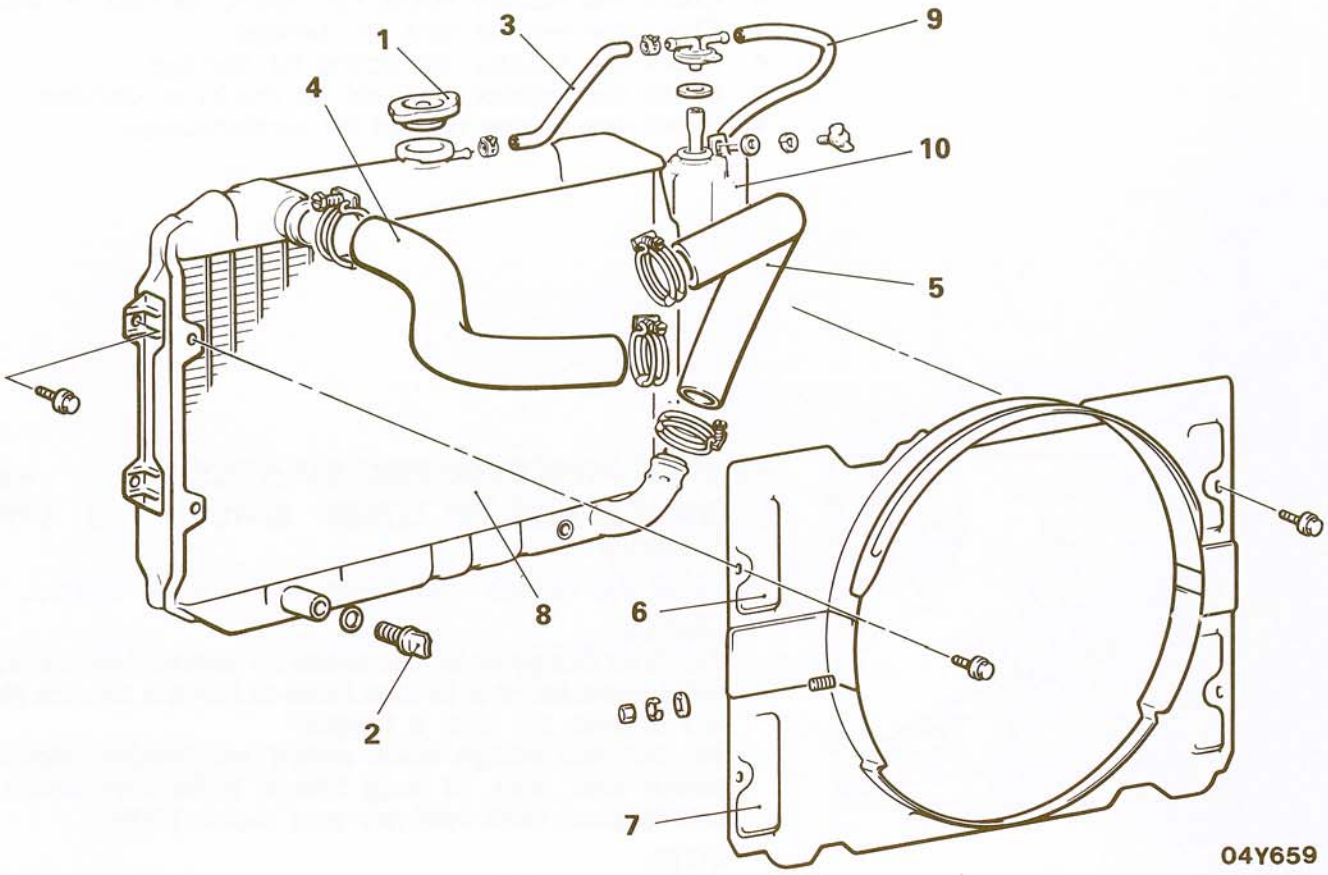

Pre-removal Operation
- Draining Engine Coolant
- Removal of Battery

Post-installation Operation
- Refilling Engine Coolant
- Installation of Battery

Radiator removal steps

1. Radiator cap
2. Drain plug
3. Overflow tube connection
4. Radiator upper hose
5. Radiator lower hose
6. Upper shroud
7. Lower shroud
8. Radiator

Reserve tank removal steps

3. Overflow tube connection
9. Overflow tube
10. Reserve tank

NOTE
(1) Reverse the removal procedures to reinstall.
(2) ◆◆: Refer to "Service Points of Removal".
(3) ◆◆: Refer to "Service Points of Installation".

SERVICE POINT OF REMOVAL

N07QBAC

2. REMOVAL OF DRAIN PLUG

Set the temperature control lever of heater control to the hot position and drain engine coolant.

INSPECTION

N07QCAE

- Check the radiator fins for bends, breaks, or plugs.
- Check the radiator for corrosion, damage, rust or scale.
- Check the radiator hoses for cracks, damage or wear.
- Check the reserve tank for damage.
- Check the radiator cap spring for damage.
- Check the radiator cap seal for cracks or damage.
- Check the engine coolant for contamination.

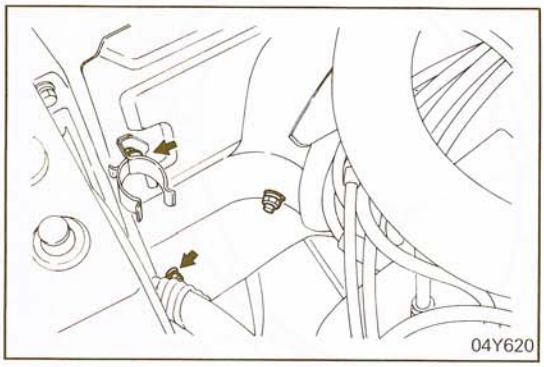

SERVICE POINTS OF INSTALLATION

N07QDAC

7. INSTALLATION OF LOWER SHROUD / 6. UPPER SHROUD

Install the radiator upper shroud and lower shroud.

Caution
The four flange bolts indicated by arrow (two on eac side) must be *6 x 14 mm (0.55 in.) or 6 x 16 mm (0.63 in.) in size. (*: O.D. x length)
Do not use flange bolts which are longer than the above bolt. Use of long flange bolts will result in interference with radiator and water leaks.

NOTE

1. Fill the radiator with clean engine coolant.
2. Install the radiator cap.
3. Run the engine until the engine coolant has warmed up enough so that the thermostat valve opens, and then stop the engine.
4. Remove the radiator cap and add engine coolant until it is up to the filler neck of the radiator, and then fill the reserve tank to the upper level.

RADIATOR (Vehicles with an Intercooler)

N07QA--

REMOVAL AND INSTALLATION

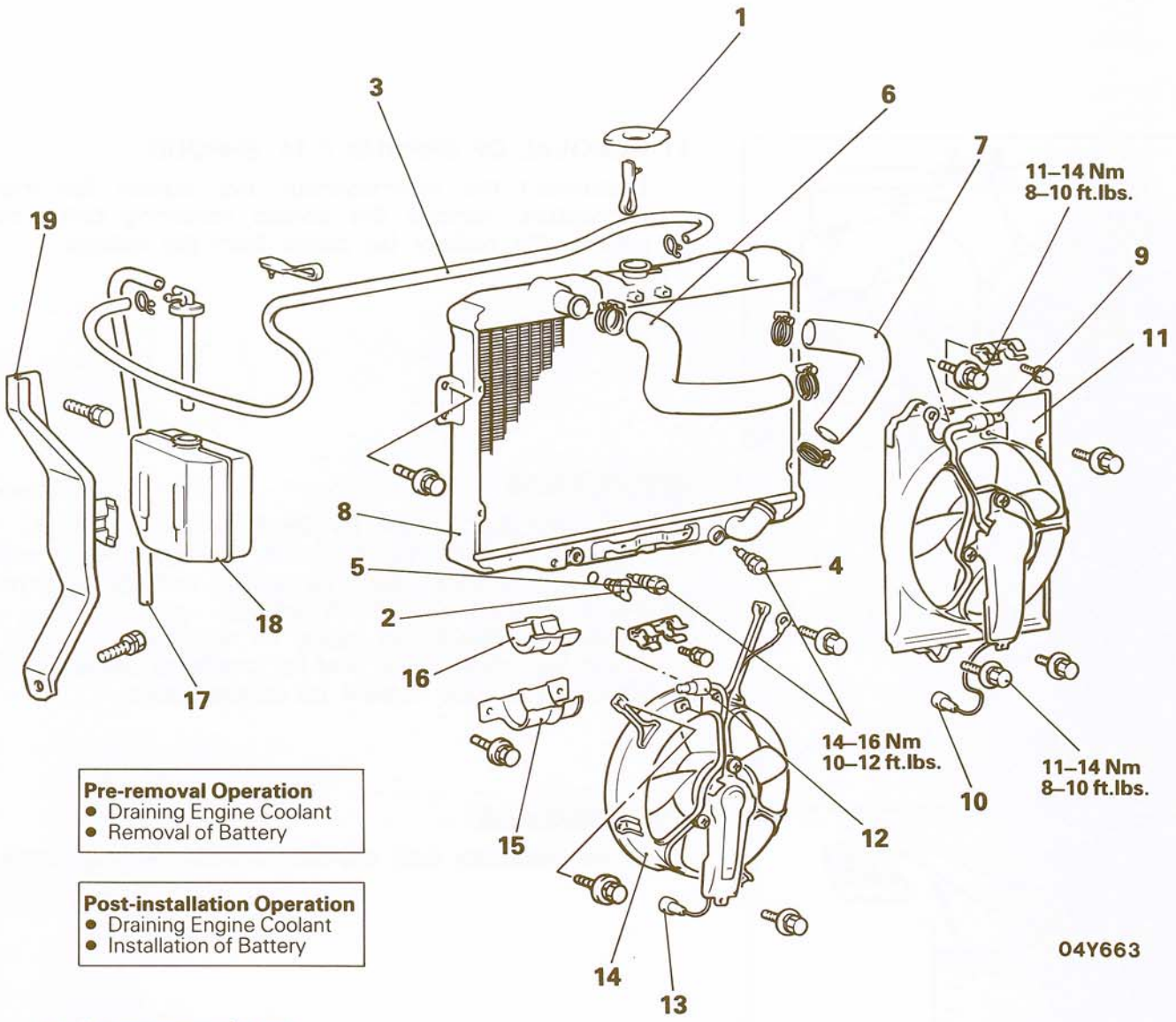

Pre-removal Operation
- Draining Engine Coolant
- Removal of Battery

Post-installation Operation
- Draining Engine Coolant
- Installation of Battery

Radiator removal steps

1. Radiator cap
2. Drain plug
3. Overflow tube connection
9. Fan motor connection
10. Connector cap
4. Thermosensor No. 1
5. Thermosensor No. 2
6. Radiator upper hose
7. Radiator lower hose
8. Radiator
11. Shroud
12. Fan motor connection
13. Connector cap
14. Shroud
15. Radiator bracket
16. Radiator support insulator

Reserve tank removal steps

3. Overflow tube connection
17. Overflow tube
18. Reserve tank
19. Reserve tank bracket

NOTE
(1) Reverse the removal procedures to reinstall.
(2) ◆◆: Refer to "Service Points of Removal".
(3) ◆◆: Refer to "Service Points of Installation".

STB Revision

SERVICE POINTS OF REMOVAL

N07QBAD

2. REMOVAL OF DRAIN PLUG

Set the temperature control lever of heater control to the hot position and drain engine coolant.

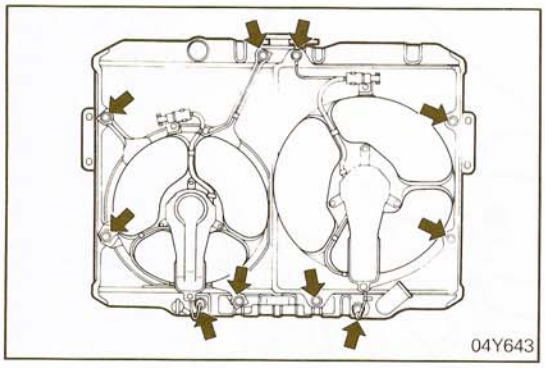

11. REMOVAL OF SHROUD / 14. SHROUD

Disconnect the thermosensor and radiator fan motor connectors, remove the shroud mounting bolts, then remove the radiator fan motor from the radiator.

INSPECTION

N07QCAF

- Check the radiator fins for bends, breaks, or plugs.
- Check the radiator for corrosion, damage, rust or scale.
- Check the radiator hoses for cracks, damage or wear.
- Check the reserve tank for damage.
- Check the radiator cap spring for damage.
- Check the radiator cap seal for cracks or damage.
- Check the engine coolant for contamination.

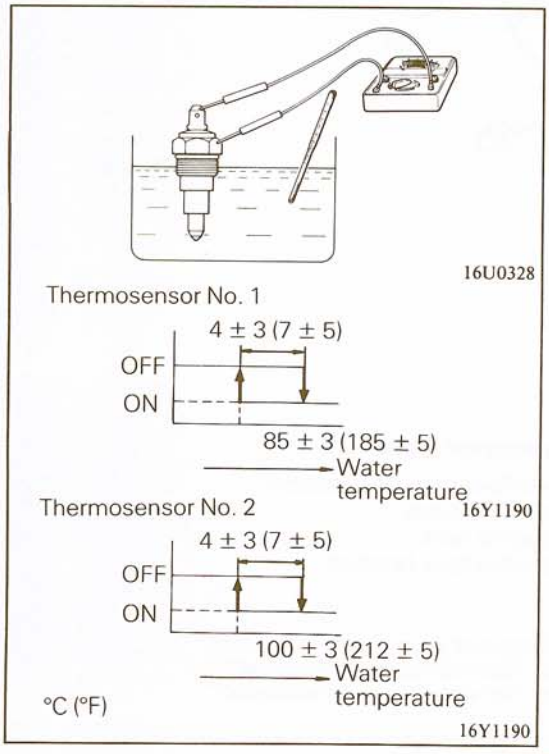

THERMOSENSOR

Check for continuity with the thermosensor in hot water.

STB Revision

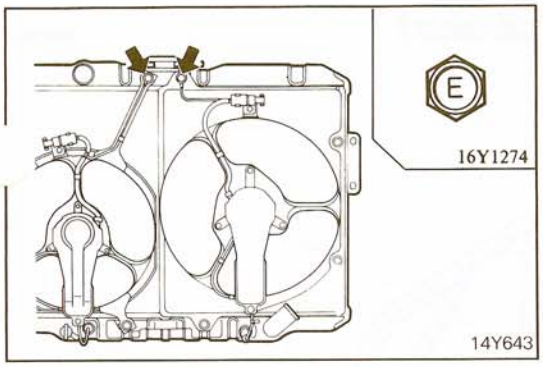

SERVICE POINTS OF INSTALLATION N07QDAD

11. INSTALLATION OF SHROUD / 14. SHROUD

When installing the shroud to the radiator, be sure to tighten the ground wires with the bolts which serves also for mounting the shroud.
Connect the thermosensor to the connector and install the cap on the thermosensor to project it from water.

NOTE

1. Fill the radiator and reserve tank with clean engine coolant.
2. Run the engine until the engine coolant has warmed up enough so that the thermostat valve opens, and then stop the engine.
3. Remove the radiator cap, pour in the engine coolant until it is up to the filler neck of the radiator, and then fill the reserve tank to the upper level.
4. Check to be sure that there is no leakage from the radiator, hose or connections.

WATER PUMP (Vehicles without an Intercooler)

N07MB- -

REMOVAL AND INSTALLATION

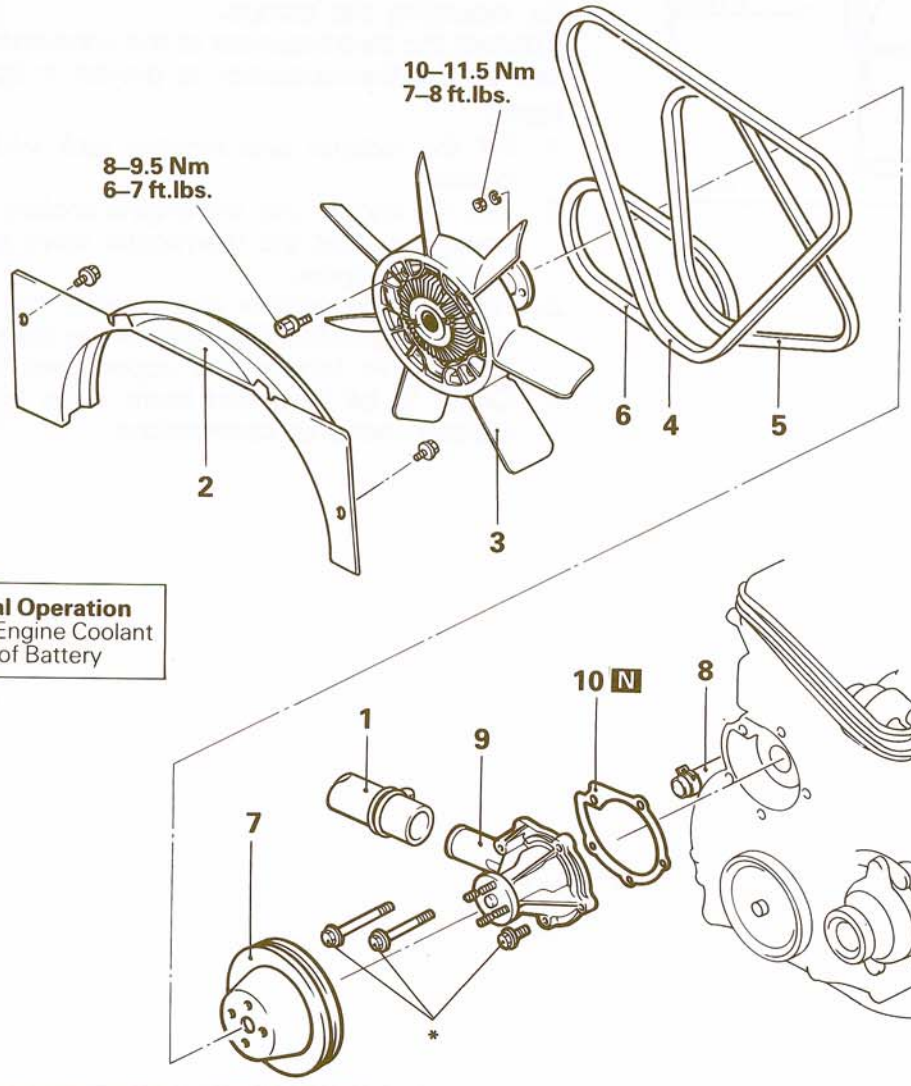

Pre-removal Operation
- Draining Engine Coolant
- Removal of Battery

Post-installation Operation
- Refilling Engine Coolant
- Installation of Battery
- Adjustment of Air Conditioner Compressor V-belt Tension (Refer to GROUP 24 HEATERS AND AIR-CONDITIONING – Service Adjustment Procedures.)
- Adjustment of Power Steering Oil Pump V-belt Tension (Refer to GROUP 19 STEERING – POWER – Service Adjustment Procedures.)
- Adjustment of Alternator V-belt Tension (Refer to P.7-11.)

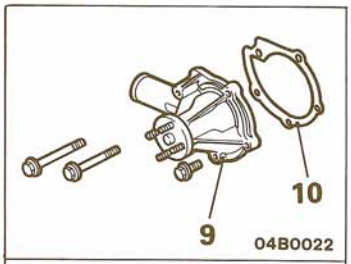

Water pump kit

Removal steps

1. Radiator lower hose
2. ➡◀ Upper shroud
3. Cooling fan clutch assembly
4. Air conditioner compressor V-belt
5. Alternator V-belt
6. Power steering oil pump V-belt
7. Water pump pulley
8. Heater hose connection
9. ➡◀ Water pump
10. Water pump gasket

NOTE
(1) Reverse the removal procedures to reinstall.
(2) ➡◀: Refer to "Service Points of Installation".
(3) N: Non-reusable parts
(4) For torque required for tightening the water pump bolts marked with *, refer to Installation of Water Pump.

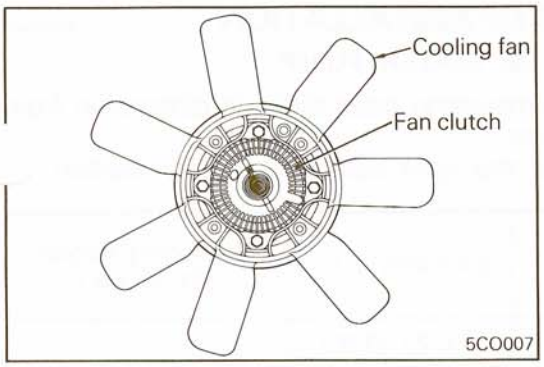

INSPECTION

N07MCAD

COOLING FAN

- Check blades for damage and cracks.
- Check bolt holes or their vicinity in fan hub for cracks and damage.

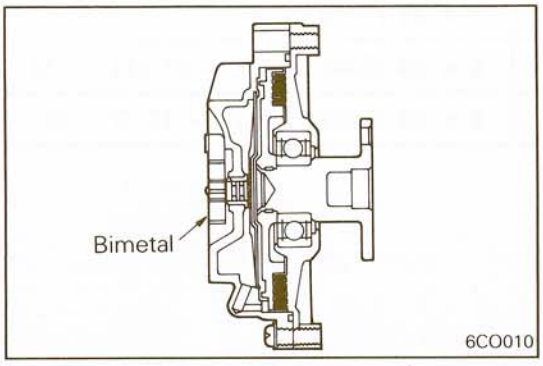

FAN CLUTCH

- Check fan clutch for fluid leaks from case joint and seals. If fluid quantity decreases due to leakage, fan speed will decrease and engine overheating might result.
- When a fan attached to an engine is turned by hand, it should give a sense of some resistance. If fan turns lightly, it is defective.
- Check bimetal strip for damage.

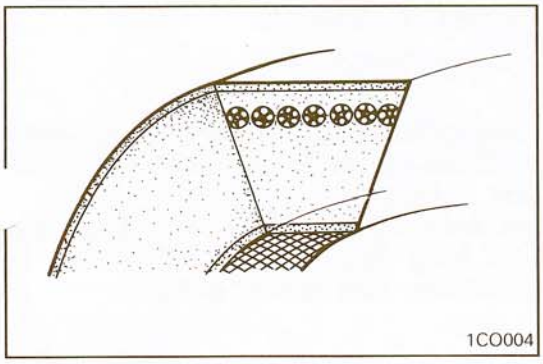

BELT

- Check surface for damage, peeling or cracks.
- Check surface for presence of oil or grease.
- Check rubber for wear or hardening.

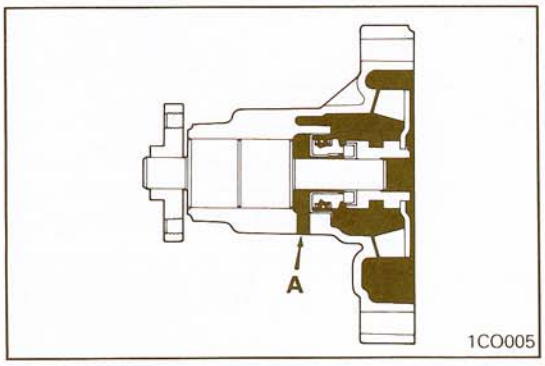

WATER PUMP

- Check each part for cracks, damage or wear, and replace the water pump assembly if necessary.
- Check the bearing for damage, abnormal noise and sluggish rotation, and replace the water pump assembly if necessary.
- Check the seal unit for leaks, and replace the water pump assembly if necessary.
- Check for water leakage. If water leaks from hole "A", seal unit is leaking. Replace as an assembly.

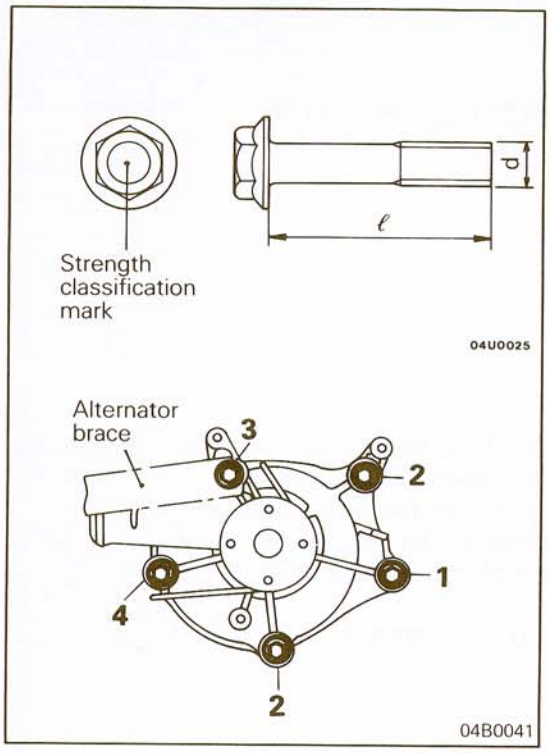

SERVICE POINTS OF INSTALLATION N07MEAF

9. INSTALLATION OF WATER PUMP

The water pump mounting bolts differ in dimension from location to location.
Be sure to install the right bolt in the right location.

No.	Strength classification (Head mark)	d x ℓ mm (in.)	Tightening torque Nm (ft.lbs.)
1	4T	8 x 23 (0.90)	10 – 12 (7 – 9)
2	4T	8 x 28 (1.10)	
3	4T	8 x 88 (3.46)	15 – 21 (11 – 15)
4	4T	8 x 78 (3.07)	10 – 12 (7 – 9)

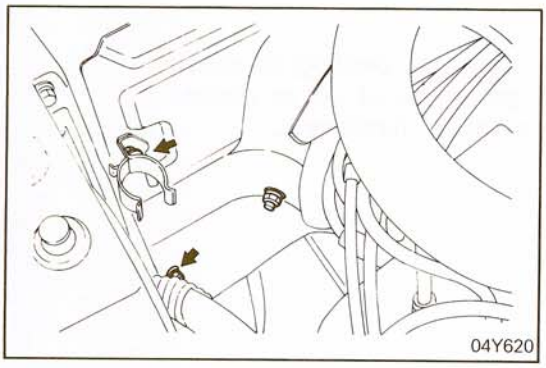

2. INSTALLATION OF UPPER SHROUD

Install the radiator upper shroud.

Caution
The four flange bolts indicated by arrow (two on each side) must be *6 x 14 mm (0.55 in.) or 6 x 16 mm (0.63 in.) in size. (*: O.D. x length)
Do not use flange bolts which are longer than the above bolt. Use of long flange bolts will result in interference with radiator and water leaks.

WATER PUMP (Vehicles with an Intercooler)

N07MB- -

REMOVAL AND INSTALLATION

Pre-removal Operation
- Draining Engine Coolant
- Removal of Battery

Post-installation Operation
- Refilling Engine Coolant
- Installation of Battery
- Adjustment of Air Conditioner Compressor V-belt Tension (Refer to GROUP 24 HEATERS AND AIR-CONDITIONING – Service Adjustment Procedures.)
- Adjustment of Power Steering Oil Pump V-belt Tension (Refer to GROUP 19 STEERING – POWER – Service Adjustment Procedures.)
- Adjustment of Alternator and Water Pump Drive Belt Tension (Refer to P.7-11.)

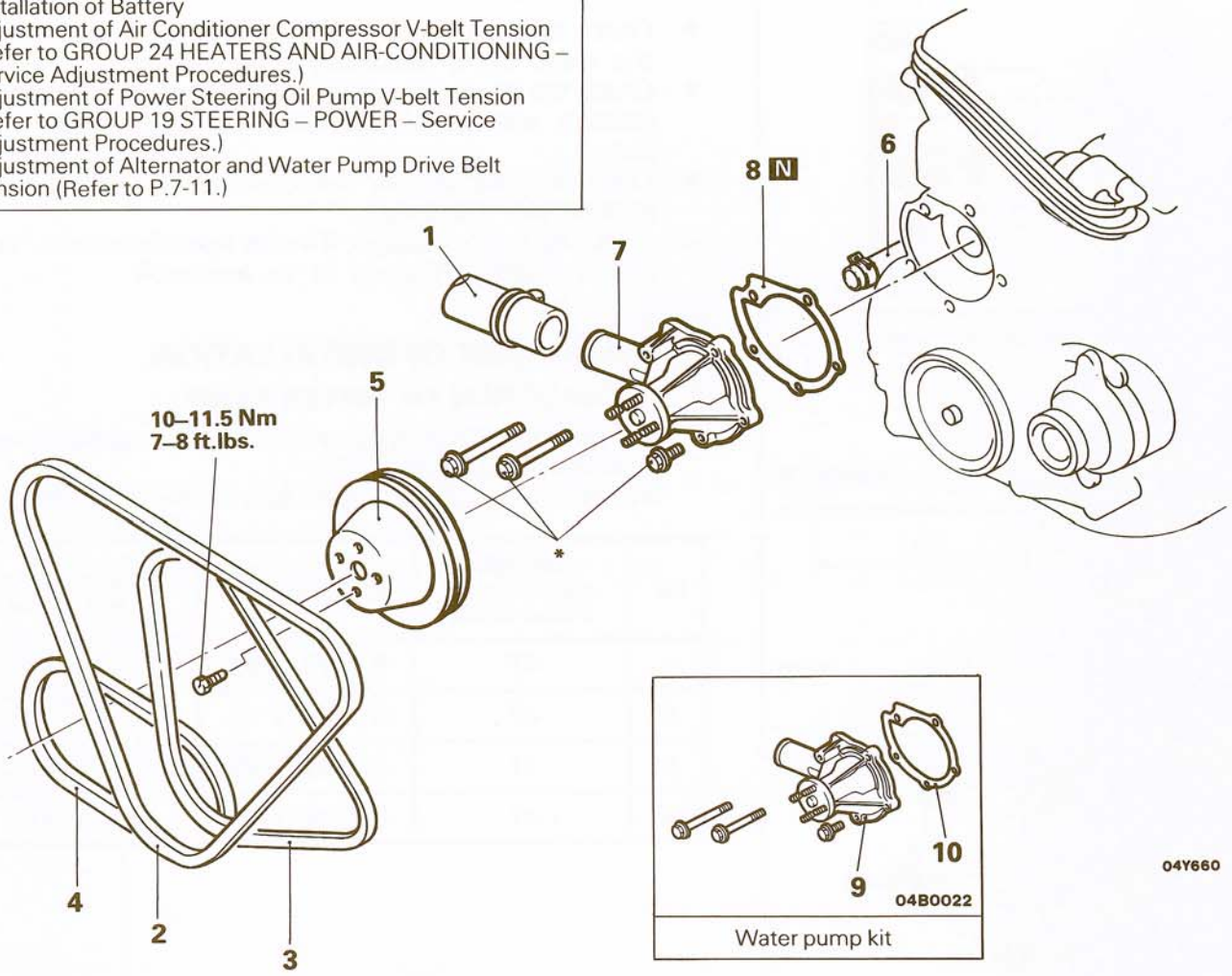

Water pump kit

Removal steps
1. Radiator lower hose
2. Air conditioner compressor V-belt
3. Alternator and water pump drive belt
4. Power steering oil pump V-belt
5. Water pump pulley
6. Heater hose connection
- ◆◆ 7. Water pump
8. Water pump gasket

NOTE
(1) Reverse the removal procedures to reinstall.
(2) ◆◆: Refer to "Service Points of Installation".
(3) N: Non-reusable parts
(4) For torque required for tightening the water pump bolts marked with *, refer to Installation of Water Pump.

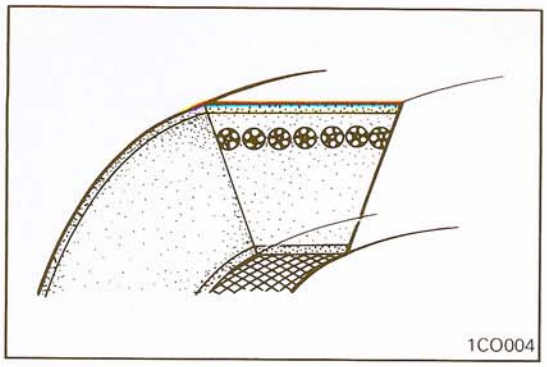
1CO004

INSPECTION

N07MDAE

BELT

- Check surface for damage, peeling or cracks.
- Check surface for presence of oil or grease.
- Check rubber for wear or hardening.

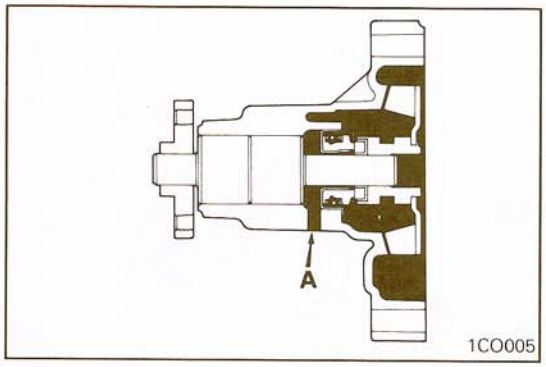

1CO005

WATER PUMP

- Check each part for cracks, damage or wear, and replace the water pump assembly if necessary.
- Check the bearing for damage, abnormal noise and sluggish rotation, and replace the water pump assembly if necessary.
- Check the seal unit for leaks, and replace the water pump assembly if necessary.
- Check for water leakage. If water leaks from hole "A", seal unit is leaking. Replace as an assembly.

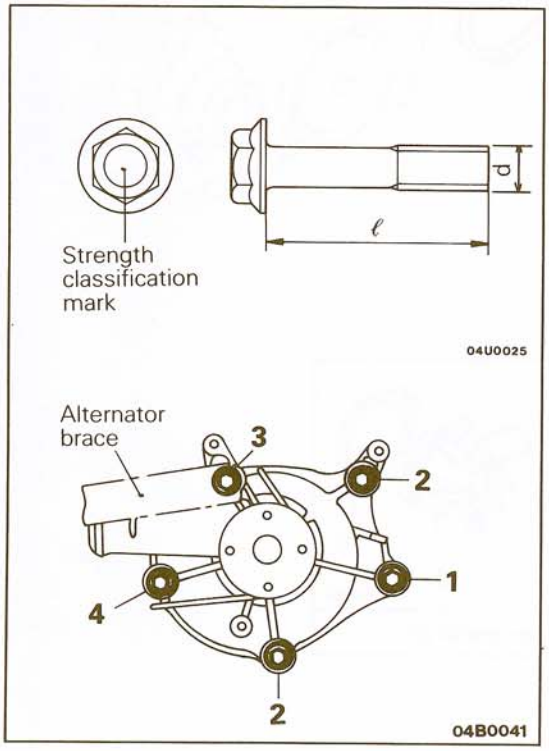

SERVICE POINT OF INSTALLATION

N07MEAG

7. INSTALLATION OF WATER PUMP

The water pump mounting bolts differ in dimensions from location to location.
Be sure to install the right bolt in the right location.

No.	Strength classification (Head mark)	d x ℓ mm (in.)	Tightening torque Nm (ft.lbs.)
1	4T	8 x 23 (0.90)	10 – 12 (7 – 9)
2	4T	8 x 28 (1.10)	
3	4T	8 x 88 (3.46)	15 – 21 (11 – 15)
4	4T	8 x 78 (3.07)	10 – 12 (7 – 9)

WATER HOSE AND PIPE

N07IA--

REMOVAL AND INSTALLATION

Pre-removal Operation
- Draining Engine Coolant

Post-installation Operation
- Refilling Engine Coolant

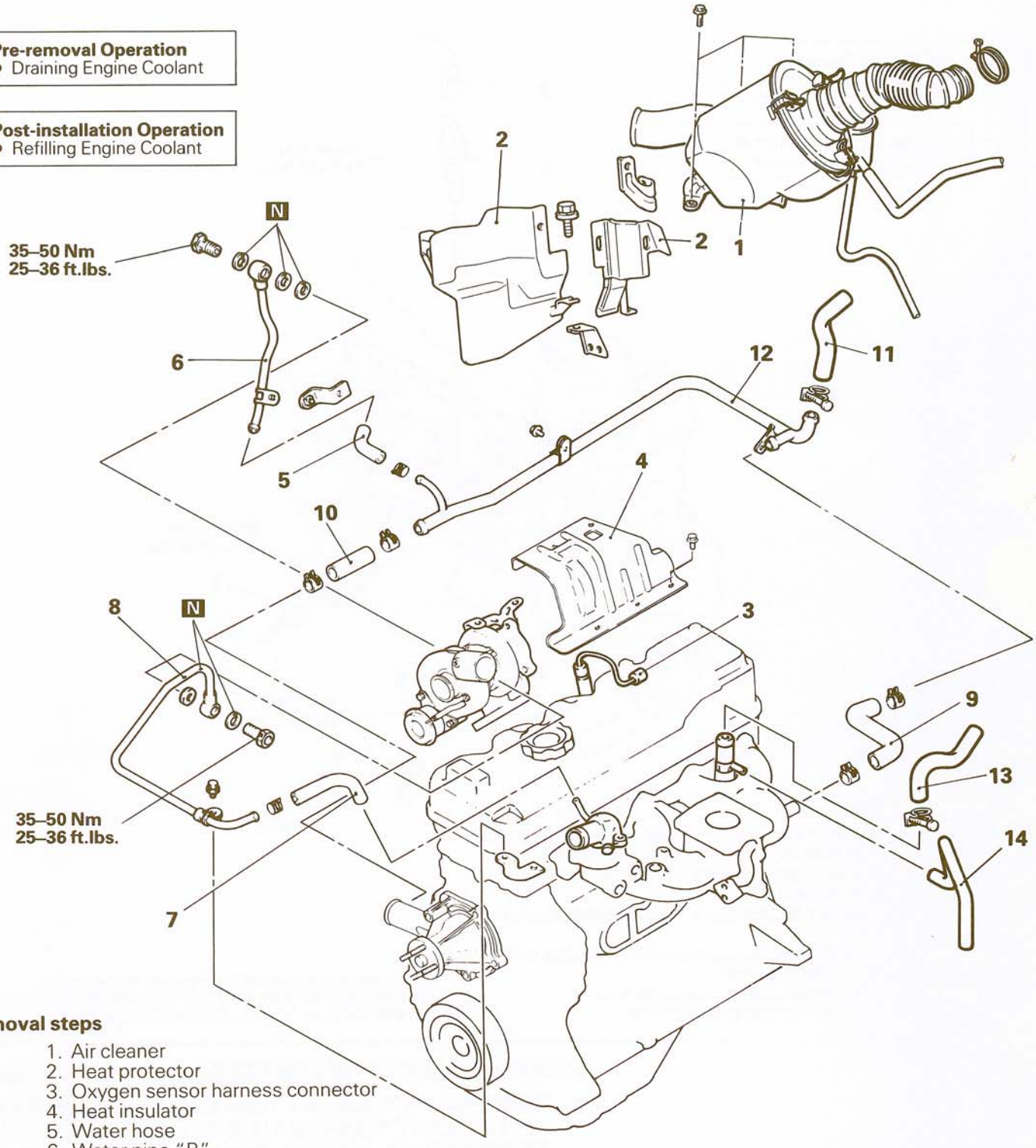

Removal steps

1. Air cleaner
2. Heat protector
3. Oxygen sensor harness connector
4. Heat insulator
5. Water hose
6. Water pipe "B"
7. Water hose
8. Water pipe "A"
9. Water hose
10. Water hose
11. Water hose A (heater) connection
12. Heater pipe assembly
13. Water hose B (heater)
14. Water hose connection

NOTE
(1) Reverse the removal procedures to reinstall.
(2) N : Non-reusable parts

01Y706

STB Revision

COOLANT TEMPERATURE GAUGE UNIT

N07OB- -

REMOVAL AND INSTALLATION

Pre-removal Operation
- Draining Engine Coolant

Post-installation Operation
- Refilling Engine Coolant

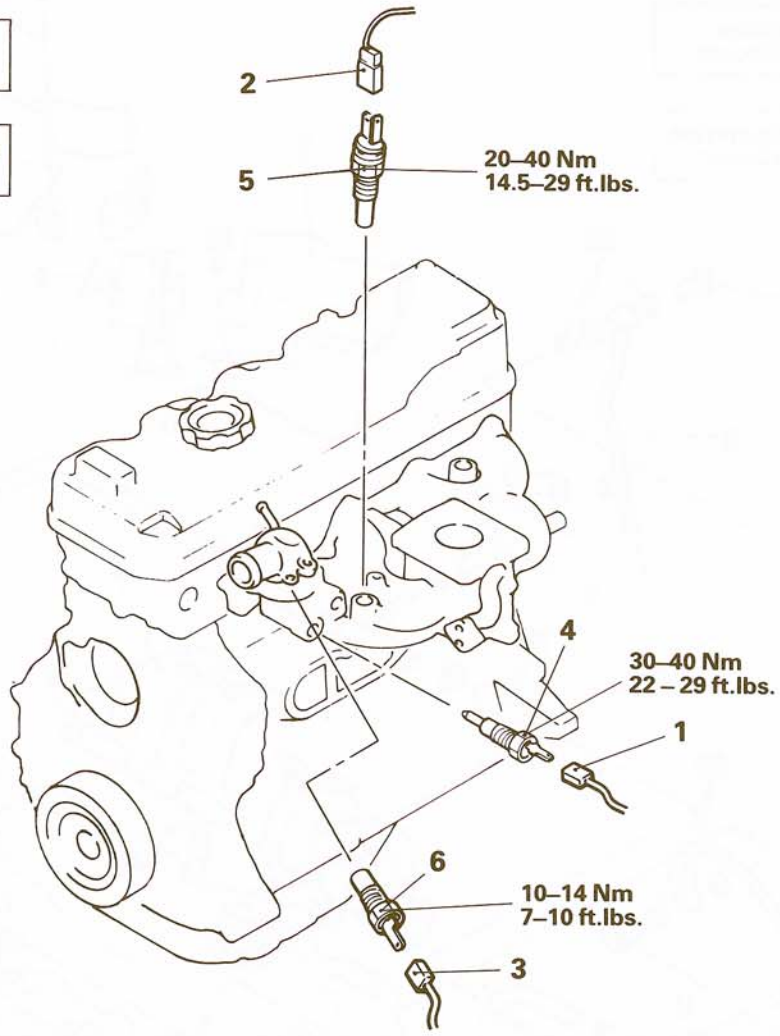

01Y705

Removal steps

3. Coolant temperature switch harness connection (Vehicles with an air conditioner)
1. Coolant temperature gauge unit harness connection
2. Coolant temperature sensor harness connection
6. Coolant temperature switch (Vehicles with an air conditioner)
4. Coolant temperature gauge unit
5. Coolant temperature sensor

NOTE
(1) Reverse the removal procedures to reinstall.
(2) ◀▶: Refer to "Service Points of Removal".
(3) ▶◀: Refer to "Service Points of Installation".

SERVICE POINTS OF REMOVAL

N07OCAB

4. REMOVAL OF COOLANT TEMPERATURE GAUGE UNIT / 5. COOLANT TEMPERATURE SENSOR / 6. COOLANT TEMPERATURE SWITCH (Vehicles with an air conditioner)

(1) Drain cooling system down to gauge unit level or below.
(2) Disconnect the battery ground cable and disconnect harness from the gauge unit.
(3) Remove the coolant temperature gauge unit.

STB Revision

INSPECTION

N07QDAA

Refer to GROUP 8 ELECTRICAL.

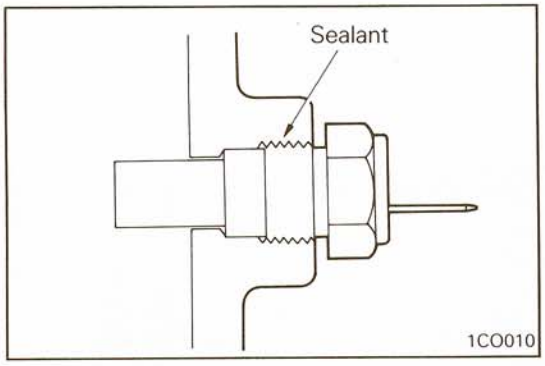

SERVICE POINTS OF INSTALLATION

N07OEAH

4. INSTALLATION OF COOLANT TEMPERATURE GAUGE UNIT / 5. COOLANT TEMPERATURE SENSOR (Vehicles with an air conditioner) / 6. COOLANT TEMPERATURE SWITCH

(1) Apply sealant to threaded portion and tighten.

Specified sealant: 3M Brand Nut Locking No. 4171

(2) Connect the harness to coolant temperature gauge unit.
(3) Connect battery ground cable.
(4) Refill cooling system.

Caution
Do not use an impact wrench to install the coolant temperature gauge unit, coolant temperature sensor, and coolant temperature switch.

ENGINE

CONTENTS

CRANKSHAFT, FLYWHEEL AND DRIVE PLATE 62

CYLINDER BLOCK 66

CYLINDER HEAD 41

CYLINDER HEAD GASKET 19

ENGINE AND TRANSMISSION ASSEMBLY 26

ENGINE MOUNTING 24

ENGINE OIL COOLER 16

FRONT CASE, OIL PUMP AND SILENT SHAFT 52

GENERAL INFORMATION 2

JET VALVE 50

OIL PAN AND OIL SCREEN 18

PISTON AND CONNECTING ROD 56

ROCKER ARM AND SHAFT ASSEMBLY 38

ROCKER ARMS, ROCKER ARM SHAFTS AND CAMSHAFT 35

SERVICE ADJUSTMENT PROCEDURES 13

- Adjustment of Valve Clearance 13
- Compression Pressure Check 14
- Inspection of Engine Oil 13
- Replacement of Engine Oil 13
- Replacement of Engine Oil Filter 13
- Retorquing Cylinder Head Bolts 13
- Silent Shaft Drive Chain Tension Adjustment Procedure 14

SPECIAL TOOLS 11

SPECIFICATIONS 4

- General Specifications 4
- Sealants 10
- Service Specifications 4
- Torque Specifications 9

TIMING CHAIN TRAIN 31

TROUBLESHOOTING 12

- Compression Too Low
- Connecting Rod Noise/Main Bearing Noise
- Excessive Engine Rolling and Vibration
- Noisy Valves
- Oil Pressure Drop
- Oil Pressure Too High
- Timing Chain Noise

VALVES AND VALVE SPRINGS 44

GENERAL INFORMATION

N09BACA

The 2.6L (157 cu.in.) displacement engine is a four cylinder overhead camshaft power plant with a cast iron cylinder block, an aluminum cylinder head and a silent shaft system.
The forged steel crankshaft is supported by five main bearings.

The cylinder block has a siamese type water jacket which ensures high cooling efficiency and uniform cooling of the cylinders.
Two counterbalance shafts (silent shafts) are incorporated in the cylinder block to reduce engine noise and vibration.
The pistons are made of aluminum alloy casting.
The piston pin is floating in the piston and pressed-in to the forged steel connecting rod. The piston pin is offset from the piston center toward the thrust side.
The oil pump is a gear type pump and also drives the right (front) silent shaft. The oil pump and left (rear) silent shaft are chain driven through sprockets by crankshaft.

The silent shaft system cancels the vertical vibration force of the engine and secondary vibrating forces such as the vibrating moment in the rolling direction. The silent shafts are located in the upper left (rearward side) and lower right (forward side) of the cylinder block. The left shaft rotates in the same direction as the crankshaft while the right shaft rotates in the opposite direction at twice the crankshaft speed. Each silent shaft is supported by two aluminum bearings.
The cylinder head is an aluminum alloy casting with compact type combustion chambers. The intake and exhaust valves are made of heat-resistant steel and arranged in a "V" with a camshaft on center. The jet valve assemblies, consisting of the jet valve, jet body, stem seal, spring, retainer and retainer lock, are screwed into the cylinder head.
The cast iron camshaft is supported by five bearing journals and is driven by the crankshaft sprocket and camshaft sprocket by the timing belt. The distributor drive gear is mounted on the front of the camshaft.
The camshaft drive belt is a cogged type belt. To provide the belt with the proper tension and ensure quiet operation at all times, tensioner is installed on the slack side.
Two rocker arms are used with one for actuating the exhaust valves and the other for actuating the intake valves and jet valves.
The rocker arms are aluminum alloy die-castings with cemented carbide alloy slippers. By using the auto las adjuster, the rocker arms eliminate the need for adjustment of intake and exhaust valve clearance.
The oil pump is an internal-external involute gear type pump and is driven by crankshaft. The oil filter, paper filter element cartridge type, is mounted on the front facing side of the engine.

SECTIONAL VIEW

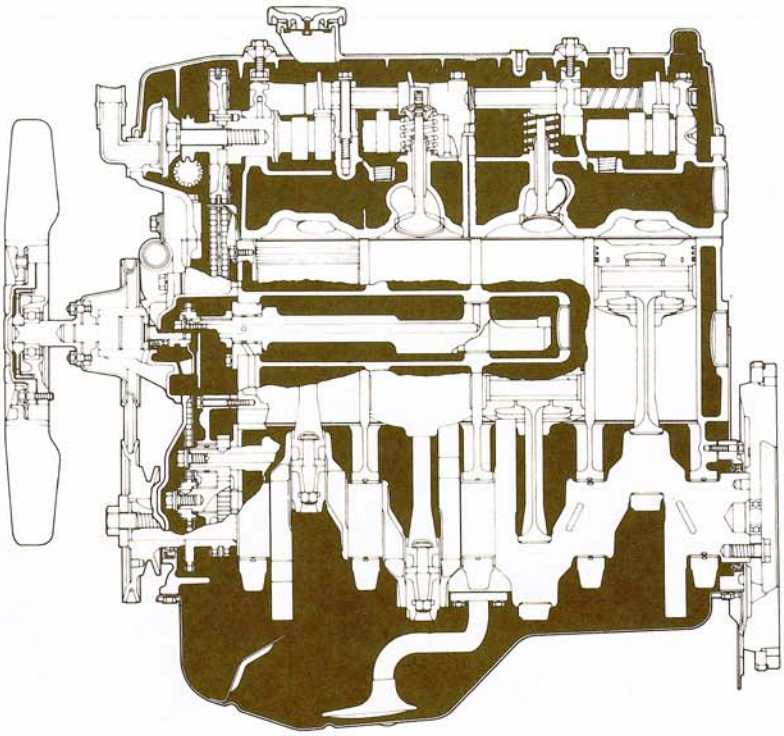

5EN194

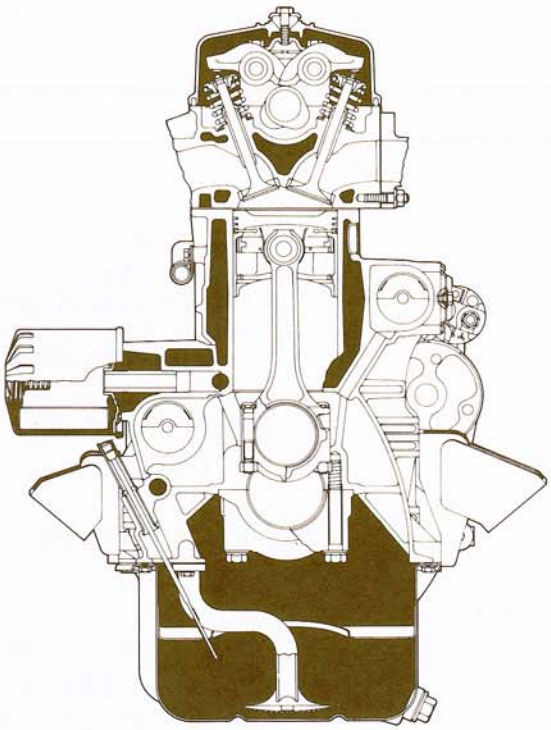

5EN195

SPECIFICATIONS

N09CA- -

GENERAL SPECIFICATIONS

Description	
Type	In-line, OHC
Number of cylinders	4
Bore mm (in.)	91.1 (3.5866)
Stroke mm (in.)	98.0 (3.8583)
Piston displacement cc (cu.in.)	2,555 (155.9)
Compression ratio	8.2
Firing order	1 – 3 – 4 – 2
Valve timing	
Intake valve	
Opens (BTDC)	25°
Closes (ABDC)	59°
Exhaust	
Opens (BBDC)	64°
Closes (ATDC)	20°
Jet valve	
Opens (BTDC)	25°
Closes (ABDC)	59°
Valve overlap	45°
Intake valve duration	264°
Exhaust valve duration	264°
Jet valve duration	264°

SERVICE SPECIFICATIONS

N09CB- -

Description	
Cylinder head	
Overall height mm (in.)	
Standard value	90.0 (3.5433)
Limit	*89.8 (*3.5354) * If cylinder block gasket surface has already been ground, thickness of the removed stock should be included in the grinding limit of −0.2 (−0.0079).
Flatness of gasket surface mm (in.)	
Standard value	Max. 0.05 (0.0020)
Limit	0.2 (0.0079)
Flatness of manifold mounting surface mm (in.)	
Standard value	Max. 0.15 (0.0059)
Limit	0.3 (0.0118)
Oversize rework dimension of valve seat hole mm (in.)	
Intake 0.3 mm (0.012 in.) O.S.	47.300 – 47.325 (1.8622 – 1.8632)
0.6 mm (0.024 in.) O.S.	47.600 – 47.625 (1.8740 – 1.8750)
Exhaust 0.3 mm (0.012 in.) O.S.	40.300 – 40.325 (1.5866 – 1.5876)
0.6 mm (0.024 in.) O.S.	40.600 – 40.625 (1.5984 – 1.5994)

STB Revision

Description	
Oversize rework of valve guide hole (both intake and exhaust) mm (in.)	
0.05 mm (0.002 in.) O.S.	13.050 – 13.068 (0.5138 – 0.5145)
0.25 mm (0.010 in.) O.S.	13.250 – 13.268 (0.5217 – 0.5224)
0.50 mm (0.020 in.) O.S.	13.500 – 13.518 (0.5315 – 0.5422)
Timing chain	
No. of links	102
Pitch mm (in.)	9.5 (0.3740)
Timing chain "B" for silent shaft drive	
No. of links	90
Pitch mm (in.)	8.0 (0.3150)
Clearance between chain and chain guide mm (in.)	0.2 – 0.8 (0.0079 – 0.0315)
Camshaft	
Cam height mm (in.)	
Intake	
Standard value	42.4 (1.6693)
Limit	41.9 (1.6496)
Exhaust	
Standard value	42.4 (1.6693)
Limit	41.9 (1.6496)
Fuel pump drive cam mm (in.)	37 (1.4567)
Journal diameter mm (in.)	34 (1.3386)
Oil clearance mm (in.)	0.03 – 0.05 (0.0012 – 0.0020)
End play mm (in.)	
Standard value	0.1 – 0.2 (0.004 – 0.008)
Limit	0.4 (0.016)
Rocker arm	
I.D. mm (in.)	18.9 (0.7441)
Clearance (Rocker arm-to-shaft) mm (in.)	0.01 – 0.04 (0.0004 – 0.0016)
Rocker arm shaft	
O.D. mm (in.)	18.9 (0.7441)
Valve	
Valve length mm (in.)	
Intake	107.96 (4.2504)
Exhaust	105.86 (4.1674)
Stem O.D. mm (in.)	
Intake	8.0 (0.3150)
Exhaust	8.0 (0.3150)
Face angle	45° – 45°30'
Thickness of valve head (Margin) mm (in.)	
Intake	
Standard value	1.2 (0.0473)
Limit	0.7 (0.028)
Exhaust	
Standard value	2.0 (0.0787)
Limit	1.5 (0.059)

Description	
Valve stem to valve guide clearance mm (in.)	
Intake	
Standard value	0.03 – 0.06 (0.0012 – 0.0024)
Limit	0.1 (0.0039)
Exhaust	
Standard value	0.05 – 0.09 (0.0020 – 0.0035)
Limit	0.15 (0.0059)
Valve guide	
Length mm (in.)	
Intake	47 (1.8504)
Exhaust	52 (2.0474)
Over size mm (in.)	0.05 (0.0020), 0.25 (0.010), 0.50 (0.020)
Valve seat insert	
Width of seat contact mm (in.)	0.7 – 1.2 (0.0276 – 0.0473)
Seat angle	45°
Oversize rework valve seat insert height mm (in.)	
Intake 0.3 mm (0.012 in.)	7.9 – 8.1 (0.3110 – 0.3189)
0.6 mm (0.024 in.)	8.2 – 8.4 (0.3228 – 0.3307)
Exhaust 0.3 mm (0.012 in.)	7.9 – 8.1 (0.3110 – 0.3189)
0.6 mm (0.024 in.)	8.2 – 8.4 (0.3228 – 0.3307)
Valve spring	
Free length mm (in.)	
Standard value	49.81 (1.9610)
Limit	48.81 (1.9216)
Load N (lbs.)	322.6 (72.5) at installed height
Installed height mm (in.)	
Standard value	40.4 (1.5906)
Limit	41.40 (1.6299)
Out of squareness	
Standard value	2°
Limit	4°
Jet valve	
Length mm (in.)	91.58 (3.6055)
Stem O.D. mm (in.)	4.3 (0.1693)
Seat angle	45°
Valve clearance mm (in.)	
Hot engine	0.25 (0.010)
Cold engine (for reference)	0.17 (0.007)
Jet valve spring	
Free length mm (in.)	29.6 (1.1654)
Load N (lbs.)	34.3 (7.7) at setting length
Installed height mm (in.)	21.5 (0.8465)
Out of squareness	1.5°
Cylinder block	
Cylinder bore mm (in.)	91.1 (3.5866)
Out-of-roundness and taper of cylinder bore mm (in.)	Max. 0.02 (0.0008)

Description	
Overall height mm (in.)	
Standard value	316 (12.4409)
Limit	*315.8 (*12.4330) * If cylinder head gasket surface has already been ground, thickness of the removed stock should be included in the grinding limit of −0.2 (−0.0079)
Flatness of gasket surface mm (in.)	
Standard value	Max. 0.05 (0.0020)
Limit	0.1 (0.0039)
Right silent shaft	
Front journal diameter mm (in.)	21 (0.8268)
Rear journal diameter mm (in.)	43 (1.6929)
Oil clearance mm (in.)	
Rear	0.10 – 0.13 (0.0039 – 0.0053)
Left silent shaft	
Front journal diameter mm (in.)	23 (0.9055)
Rear journal diameter mm (in.)	43 (1.6929)
Oil clearance mm (in.)	
Front	0.02 – 0.06 (0.0008 – 0.0024)
Rear	0.10 – 0.13 (0.0039 – 0.0053)
Piston	
O.D mm (in.)	91.1 (3.5866)
Clearance (Piston-to-cylinder) mm (in.)	0.02 – 0.04 (0.0008 – 0.0016)
Ring groove width mm (in.)	
No.1 & No.2	1.5 (0.0591)
Oil	4.0 (0.1575)
Compression pressure kPa (psi)	
Standard	1,000 (142)
Limit	800 (113)
Pressure difference between cylinders kPa (psi)	Max. 100 (14)
Oversize mm (in.)	0.25 (0.010), 0.50 (0.020), 0.75 (0.030), 1.00 (0.039)
Piston ring	
Side clearance mm (in.)	
No.1	0.05 – 0.09 (0.0020 – 0.0035)
No.2	0.02 – 0.06 (0.0008 – 0.0024)
End gap mm (in.)	
No.1	0.30 – 0.45 (0.0112 – 0.0177)
No.2	0.25 – 0.40 (0.0098 – 0.0158)
Oil ring side rail	0.30 – 0.80 (0.0118 – 0.0315)
Oversize mm (in.)	0.25 (0.01), 0.50 (0.02), 0.75 (0.03), 1.00 (0.039)
Connecting rod	
Bend mm (in.)	0.05 (0.0020) or less per 100 (3.937)
Twist mm (in.)	0.10 (0.0039) or less per 100 (3.937)
Connecting rod big end to crankshaft side clearance mm (in.)	
Standard value	0.1 – 0.25 (0.0039 – 0.0098)
Limit	0.4 (0.015)
Piston pin press-in load N (lbs.)	7,350 – 17,150 (1,650 – 3,860)

STB Revision

Description	
Connecting rod bearing	
Oil clearance mm (in.)	
Standard value	0.02 – 0.05 (0.0008 – 0.0020)
Limit	0.1 (0.004)
Undersize mm (in.)	0.25 (0.01), 0.50 (0.02), 0.75 (0.03)
Crankshaft main bearing	
Oil clearance mm (in.)	
Standard value	0.02 – 0.05 (0.0008 – 0.0020)
Limit	0.1 (0.004)
Undersize mm (in.)	0.25 (0.01), 0.50 (0.02), 0.75 (0.03)
Crankshaft	
Pin O.D mm (in.)	53 (2.0866)
Journal O.D mm (in.)	60 (2.3622)
Out-of-roundness and taper of journal & pin mm (in.)	Max. 0.01 (0.0004)
End play mm (in.)	
Standard value	0.05 – 0.18 (0.0020 – 0.0071)
Limit	0.4 (0.016)
Undersize rework dimension of pin mm (in.)	
0.25 mm (0.010 in.) U.S.	52.735 – 52.750 (2.0762 – 2.0768)
0.50 mm (0.020 in.) U.S.	52.485 – 52.500 (2.0663 – 2.0669)
0.75 mm (0.030 in.) U.S.	52.235 – 52.250 (2.0565 – 2.0571)
Undersize rework dimension of journal mm (in.)	
0.25 mm (0.010 in.) U.S.	59.735 – 59.750 (2.3518 – 2.3524)
0.50 mm (0.020 in.) U.S.	59.485 – 59.500 (2.3419 – 2.3425)
0.75 mm (0.030 in.) U.S.	59.235 – 59.250 (2.3321 – 2.3327)
Flywheel	
Runout mm (in.)	
Limit	0.13 (0.0051)
Oil pressure at curb idle speed kPa (psi) [Conditions: Oil temperature is 76 to 90°C (167 to 194°F)]	Min. 80 (11.4)
Oil pump	
Driven gear	
Tip clearance mm (in.)	
Standard value	0.11 – 0.15 (0.0043 – 0.0059)
Limit	0.2 (0.0079)
Side clearance mm (in.)	
Standard value	0.04 – 0.01 (0.0016 – 0.0043)
Limit	0.15 (0.0060)
Drive gear	
Tip clearance mm (in.)	
Standard value	0.11 – 0.15 (0.0043 – 0.0059)
Limit	0.2 (0.0079)
Side clearance mm (in.)	
Standard value	0.05 – 0.11 (0.0020 – 0.0043)
Limit	0.15 (0.0060)

STB Revision

Description	
Relief spring	
Free length mm (in.)	46.4 (1.8346)
Load N (lbs.)	60 at 40.1 mm (13.4 at 1.5787 in.)

TORQUE SPECIFICATIONS

N09CC- -

Description	Nm	ft.lbs
Cylinder head bolts – Cold engine	90 – 100	65 – 72
Cylinder head bolt (M8 bolt)	15 – 21	11 – 15
Cylinder head bolts – Hot engine	100 – 110	73 – 79
Cylinder head bolt (M8 bolt)	15 – 22	11 – 16
Camshaft bearing cap bolts	19 – 21	14 – 15
Camshaft sprocket bolts	50 – 60	37 – 43
Rocker cover bolts	5 – 7	4 – 5
Jet valve assembly	18 – 22	13 – 16
Engine oil cooler eye bolt	30 – 35	22 – 25
Intercooler air hose band	3 – 5	2 – 4
Accelerator cable lock nut	8 – 11	5.8 – 8.0
Rear catalytic converter to front catalytic converter nut	30 – 40	22 – 29
Turbocharger oil pipe flare nut	16 – 23	13 – 17
Engine mounting front insulator to engine nut	13 – 20	9.4 – 14
Engine mounting front insulator to cross member bolt	30 – 40	22 – 29
Engine mounting rear insulator to engine support bracket bolt	13 – 20	9.4 – 14
Engine mounting rear insulator to engine nut	20 – 24	14 – 17
Engine support bracket to body bolt	10	7.2
Power steering oil pump to bracket bolt	25 – 33	18 – 24
Air conditioner compressor to bracket bolt	20 – 29	14 – 22
Automatic transmission oil cooler eye bolt	30 – 50	22 – 36
Clutch tube flare nut	13 – 17	9.4 – 12.3
Propeller shaft to torque tube companion flange bolt	50 – 60	36 – 43
Rocker arm adjusting nuts	8 – 10	6 – 7
Main bearing cap bolts	75 – 87	55 – 61
Connecting rod cap nuts	45 – 48	33 – 34
Dumper pulley bolts	110 – 130	80 – 94
Oil pump sprocket bolt	60 – 70	44 – 50
Silent shaft sprocket bolt	60 – 70	44 – 50
Timing chain case bolt	12 – 14	9 – 10.5
Silent shaft camber cover bolts	5 – 6	4 – 5
Flywheel bolts	130 – 140	94 – 101
Drive plate bolts	130 – 140	94 – 101
Engine support brackets bolts	50 – 60	37 – 43

Description	Nm	ft.lbs
Chain guide "B" bolt (Upper)	8 – 10	6 – 7
Chain guide "B" bolt (Lowers)	15 – 22	11 – 16
Oil pump driven gear bolts	60 – 70	44 – 50
Oil pump cover bolts	10 – 12	7.5 – 8.5
Oil pump assembly mounting bolt	10 – 12	7.5 – 8.5
Thrust plate bolt	10 – 12	7.5 – 8.5
Oil pan bolt	6 – 8	4.5 – 5.5
Oil pan drain plug	35 – 45	26 – 32
Oil screen bolt	15 – 22	11 – 16
Oil filter	11 – 12	8 – 9
Oil relief valve plug	30 – 45	22 – 32

SEALANTS

N09CE- -

Items	Specified sealant and adhesive	Quantity
Oil pressure switch	3M ART Part No. 8660 or equivalent	As required
Cylinder head lower surface, 4 positions	3M ART Part No. 8660 or equivalent	As required
Semi-circular packing	3M ART Part No. 8660 or equivalent	As required

SPECIAL TOOLS

N09DA--

Tool (Number and name)	Use	Tool (Number and name)	Use
MD998308-01 Jet valve stem seal installer 	Installation of jet valve stem seal	MD998309 Jet valve spring pliers 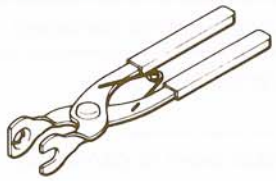	Disassembly and reassembly of jet valve
MD998310 Jet valve wrench 	Removal and installation of jet valve assembly	MD998184-01 Setting tool, piston pin 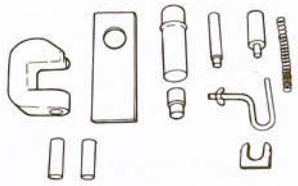	Removal and installation of piston pin
MD998251-01 Silent shaft bearing puller [Used with MIT304204] 	Removal of silent shaft bearing	MD998250-01 Silent shaft bearing installer [Used with MB990938-01] 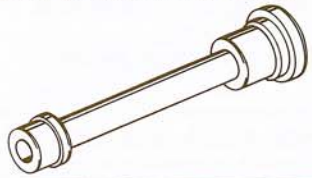	Press-fitting of silent shaft bearing
MD998376-01 Crankshaft rear oil seal installer [Used with MB990938-01] 	Installation of crankshaft rear oil seal	MD998443-01 Auto-lash adjuster holder 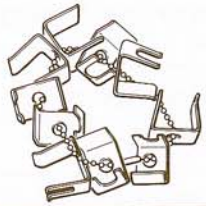	Retaining the auto-lash adjuster
MB990938-01 Right silent shaft front bearing installer 	Installation of silent shaft bearing	MIT304204 Silent shaft front bearing remover [Used with MD998251-01] 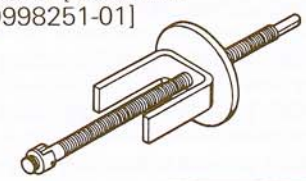	Removal of silent shaft bearing
MD998377-01 Valve stem seal installer 	Installation of valve stem seal		

TROUBLESHOOTING

N09EAAB

Symptom	Probable cause	Remedy	Reference page
Compression too low	Cylinder head gasket blown	Replace gasket	9-19
	Piston ring worn or damaged	Replace rings	9-56
	Piston or cylinder worn	Repair or replace piston and/or cylinder block	9-56, 66
	Valve seat worn or damaged	Repair or replace valve and/or seat ring	9-44
Oil pressure drop	Engine oil level too low	Check engine oil level	9-13
	Oil pressure switch faulty	Replace oil pressure switch	9-66
	Oil filter clogged	Replace oil filter	9-52
	Oil pump gears or body worn	Replace gears and/or body	9-52
	Thin or diluted engine oil	Change engine oil to correct viscosity	0-8
	Oil relief valve stuck (opened)	Repair relief valve	9-52
	Excessive bearing clearance	Replace bearings	9-62
Oil pressure too high	Oil relief valve stuck (closed)	Repair relief valve	9-52
Noisy valves	Incorrect auto-lash adjuster	Replace auto-lash adjuster	9-35
	Thin or diluted engine oil (low oil pressure)	Change engine oil	0-8
	Valve stem or valve guide worn or damage	Replace valve and/or guide	9-44
Connecting rod noise/main bearing noise	Insufficient oil supply	Check engine oil level	9-13
	Low oil pressure	Refer to "Oil pressure drop"	–
	Thin or diluted engine oil	Change engine oil	0-8
	Excessive bearing clearance	Replace bearings	9-62
Timing chain noise	Incorrect chain tension	Adjust chain tension	9-31
Excessive engine rolling and vibration	Loose engine support bracket	Retighten bracket	9-24
	Broken engine mounting front insulator	Replace insulator	9-24
	Broken engine mounting rear insulator	Replace insulator	9-24

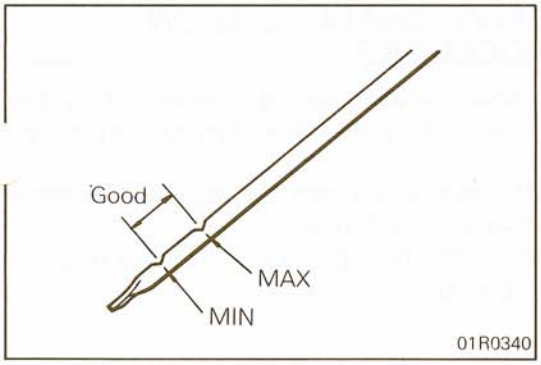

SERVICE ADJUSTMENT PROCEDURES

N09FAAA

INSPECTION OF ENGINE OIL

(1) Check that the engine oil level is within the range shown on the dipstick.
(2) Check that the engine oil is not excessively contaminated and is free from engine coolant or gasoline. Also check that it has appropriate viscosity.

REPLACEMENT OF ENGINE OIL N09FBAA

Refer to GROUP 0 LUBRICATION AND MAINTENANCE – Maintenance Service.

REPLACEMENT OF ENGINE OIL FILTER N09FCAA

Refer to GROUP 0 LUBRICATION AND MAINTENANCE – Maintenance Service.

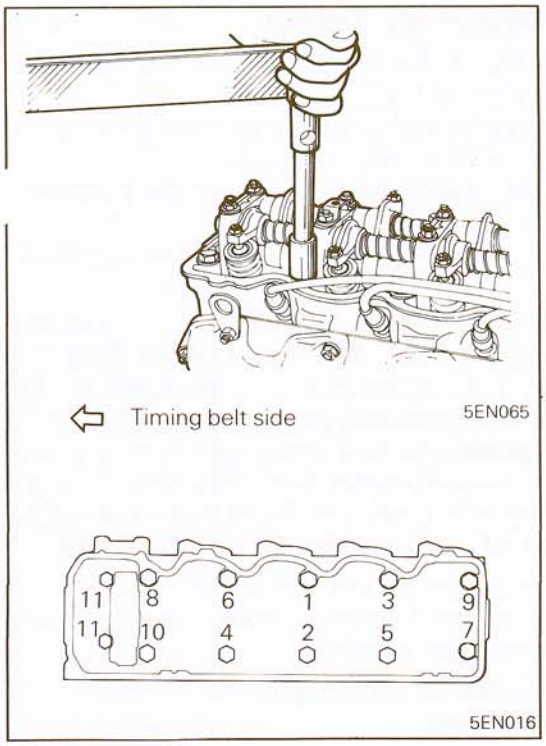

RETORQUING CYLINDER HEAD BOLTS N09FDAB

(1) Using torque wrench, first slightly loosen cylinder head bolts and then tighten to specified torque.

Tightening torque:
Cylinder head bolt (No. 1 to 10)
Cold engine 89 – 98 Nm (65 – 72 ft.lbs.)
Hot engine 98 – 107 Nm (73 – 79 ft.lbs.)
Cylinder head bolt (No. 11)
Cold engine 15 – 21 Nm (11 – 15 ft.lbs.)
Hot engine 15 – 21 Nm (11 – 15 ft.lbs.)

(2) Be sure to follow the specific torquing sequence.

NOTE
Run engine until normal operating temperature is reached, allow it to cool down, and then retorque bolts to specification for best results.

ADJUSTMENT OF VALVE CLEARANCE N09FEAA

Refer to GROUP 0 LUBRICATION AND MAINTENANCE – Maintenance Service.

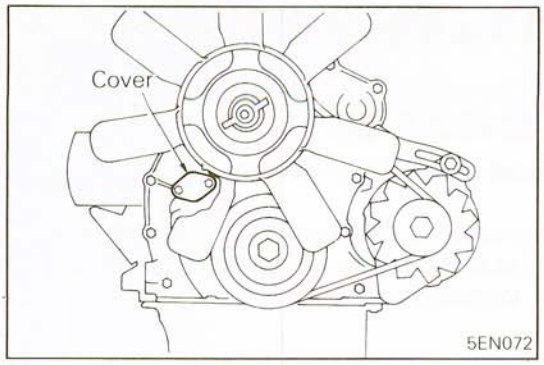

SILENT SHAFT DRIVE CHAIN TENSION ADJUSTMENT PROCEDURE

N09FIAA

When a loose slilent shaft drive chain is suspected as the probable cause of abnormal noise, the tension must b readjusted.

Tension of silent shaft drive chain can be adjusted without removing timing chain cover as follows.

(1) Remove cover from access hole provided at center of chain case (under water pump).

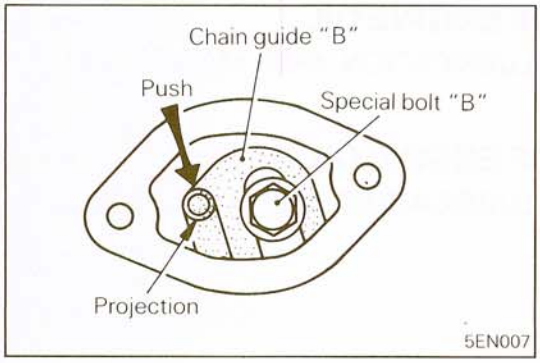

(2) Loosen special bolt "B".
(3) Using your finger, push projection on chain guide "B" in direction of arrow. Do not push projection with a screwdriver or other tool. Improper chain tension will cause abnormal noise.
(4) Tighten special bolt "B".
(5) Install cover. Do not reuse damaged gasket.

COMPRESSION PRESSURE CHECK

N09FFAA

(1) Before inspection, check that the engine oil, starter motor and batery are in normal state.
(2) Start and run the engine until the engine coolant temperature rises to 80 to 90°C (176 to 194°F).
(3) Stop the engine and disconnect the spark plug cables.
(4) Remove the spark plugs.
(5) Crank the engine to drive out foreign matter from cylinders.

Caution
Cover the spark plug holes with cloth to prevent scattering of foreign matter. Also keep away from the spark plug holes. This operation is necessary to be performed before compression pressure check to prevent danger of exposure to hot water, oil, fuel or other foreign matter that could enter the cylinders through cracks etc., as they will gush out from the spark plug holes at the time of compression pressure check.

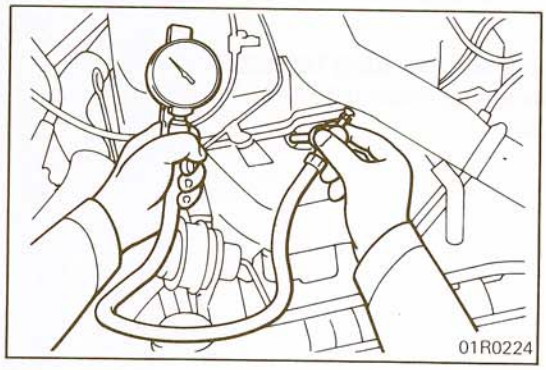

(6) Set a compression gauge at the spark plug hole.
(7) With the throttle valve held fully open, crank the engine and measure the compression pressure.

Standard value: 1,000 kPa (142 psi)
Limit: 800 kPa (113 psi)

(8) Repeat steps (6) and (7) on all cylinders to check that the compression pressure difference among all cylinders is within the following limit.

Limit: Max. 100 kPa (14 psi)

(9) If any of cylinders has a compression pressure and/or pressure difference that exceeds the limits, add a small amount of engine oil through the spark plug hole and repeat steps (6) through (8) on that cylinder.

① If addition of engine causes an increases of compression pressure, the piston and/or cylinder wall may have been worn or damaged.

② If addition of engine oil does not cause any increase of compression pressure, valve seizure, poor valve contact, pressure leaks through gasket are suspected.

ENGINE OIL COOLER

N09MA--

REMOVAL AND INSTALLATION

Vehicles without an intercooler

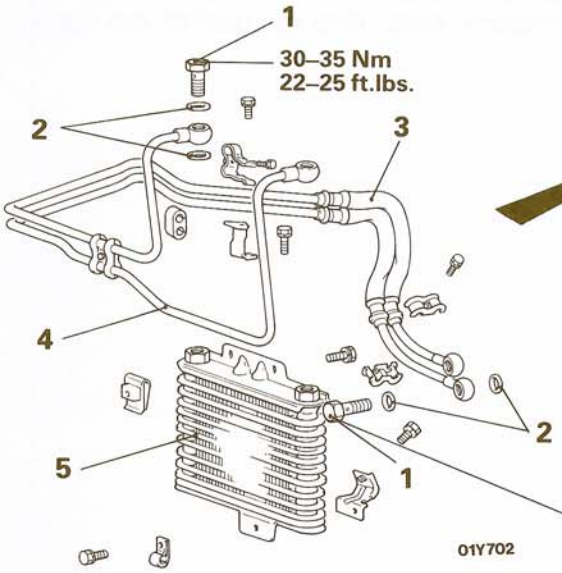

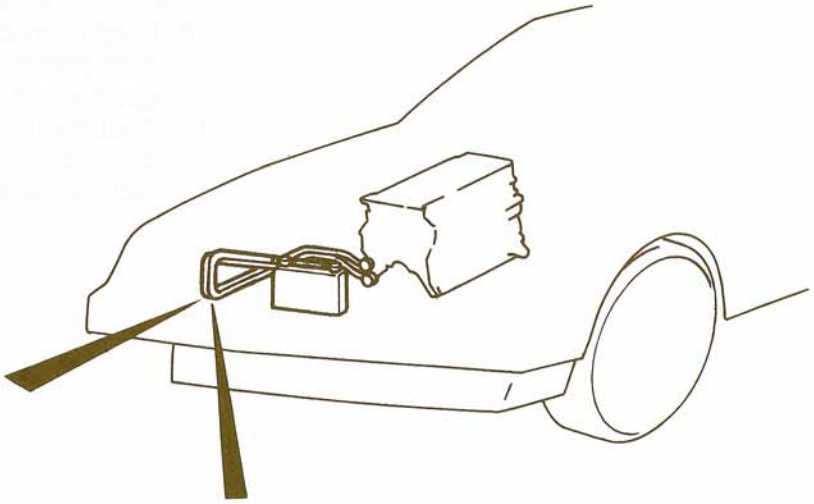

Vehicles with an intercooler

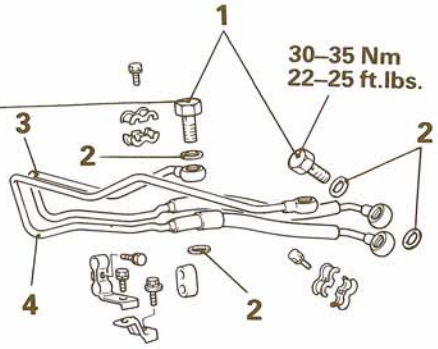

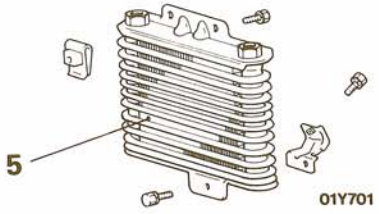

Pre-removal Operation
- Draining Engine Oil

Post-installation Operation
- Refilling Engine Oil

Removal steps

◆◆ 1. Eye bolt
2. Gasket
3. Engine oil return hose assembly
4. Engine oil feed hose assembly
5. Engine oil cooler

NOTE
(1) Reverse the removal procedures to reinstall.
(2) ◆◆: Refer to "Service Points of Removal".

SERVICE POINT OF REMOVAL

N09MBAA

1. EYE BOLT

Caution
Be sure to hold the weld nut of the oil cooler while loosening the eye bolt.

INSPECTION N09MCAA

- Check the engine oil cooler fins for bends, breaks or plugs.
- Check the engine oil cooler hoses for cracks, damage, clogging or deterioration.
- Check the gaskets for damage or deformation
- Check the eye bolts for clogging or deformation.

OIL PAN AND OIL SCREEN

N09HA--

REMOVAL AND INSTALLATION

Pre-removal Operation
- Draining Engine Oil

Post-installation Operation
- Refilling Engine Oil

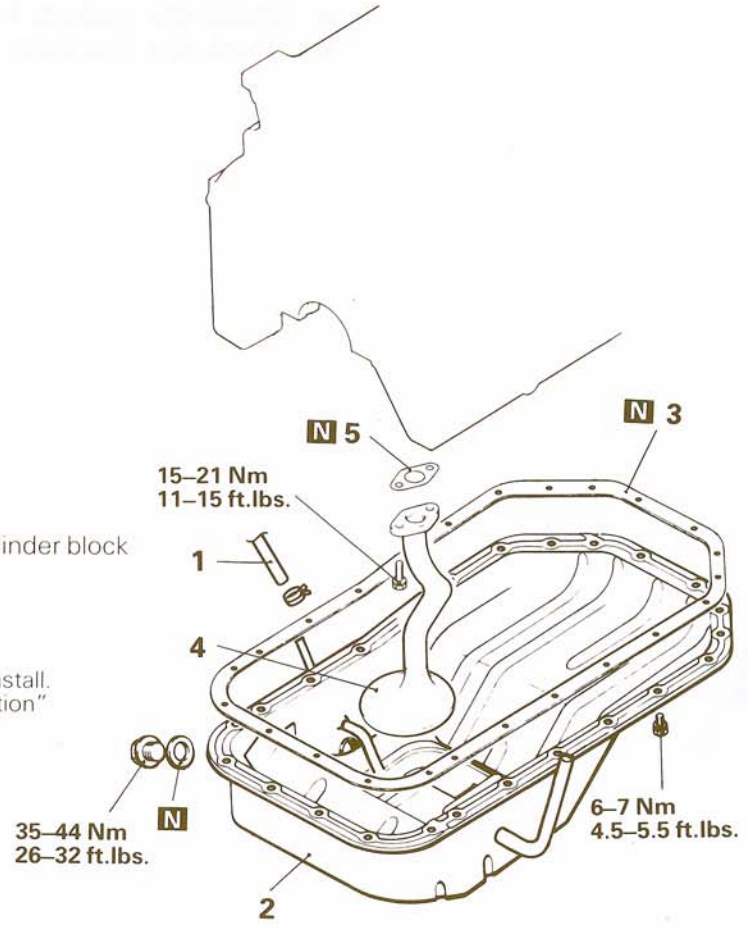

Removal steps

1. Oil drain hose
2. Oil pan
3. Oil pan gasket
   ◆◆ Application of sealant to cylinder block
4. Oil screen
5. Oil screen gasket

NOTE
(1) Reverse the removal procedures to reinstall.
(2) ◆◆: Refer to "Service Points of Installation"
(3) N: Non-reusable parts

INSPECTION

N09HCAA

- Check the oil pan for failure, damage and cracks. Replace if defective.
- Check the oil screen for clogging, damage and cracks and replace if defective.

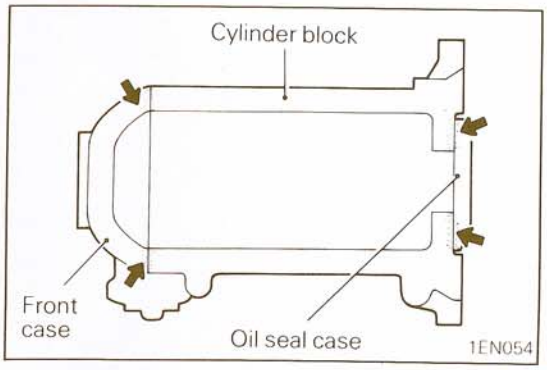

SERVICE POINTS OF INSTALLATION

N09HDAB

- **APPLICATION OF SEALANT TO CYLINDER BLOCK**

  Apply specified sealant to four places shown in illustration.

  Specified sealant: 3M ART Part No. 8660 or equivalent

  Caution
  Do not apply sealant to oil pan gasket.

STB Revision

CYLINDER HEAD GASKET

N09JA--

REMOVAL AND INSTALLATION

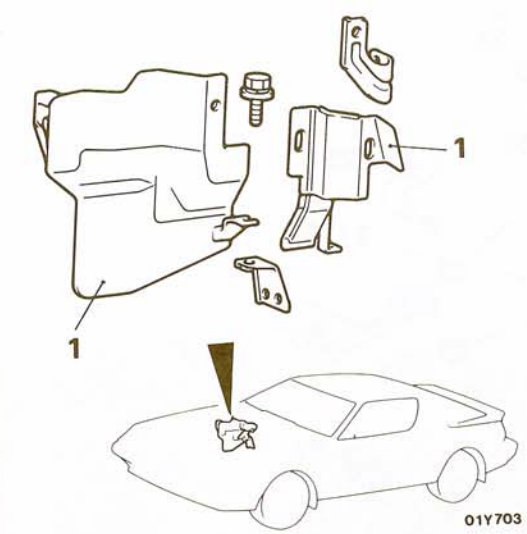

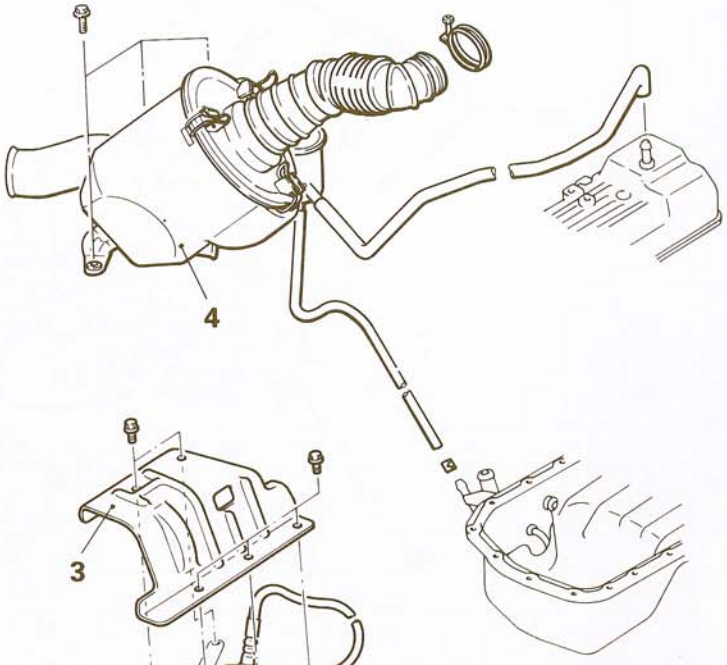

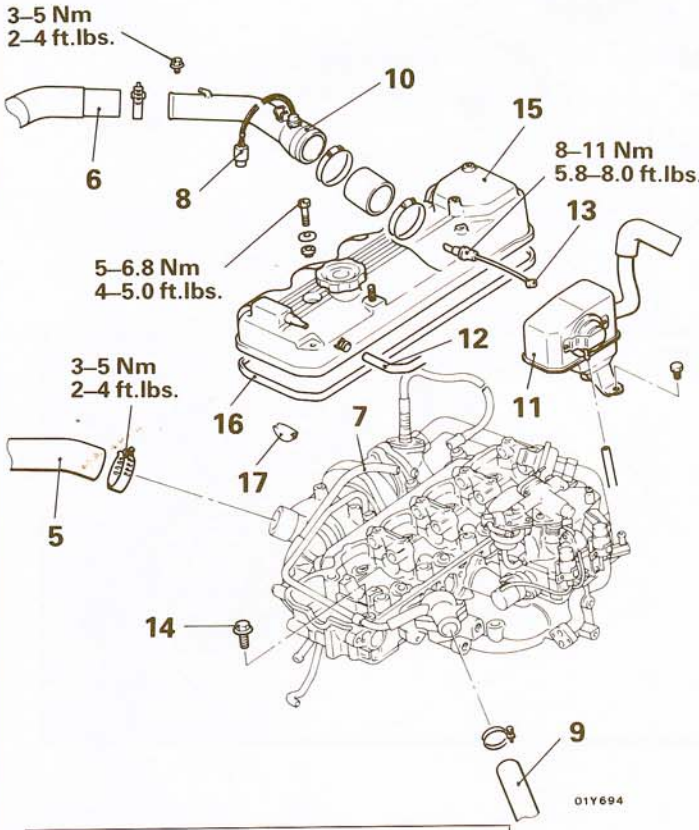

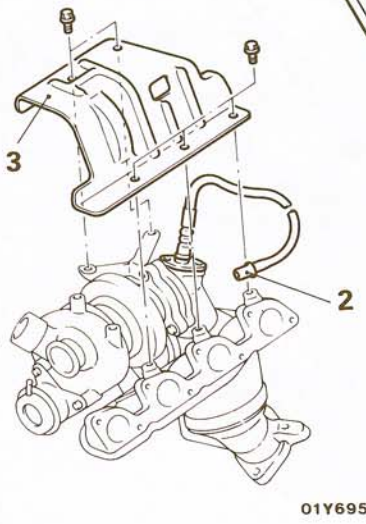

Pre-removal Operation

- Draining Engine Coolant
- Draining Engine Oil
- Removal of Residual Pressure in Fuel High Pressure Hose. (Refer to GROUP 14 FUEL SYSTEM – Service Adjustment Procedures)
- Removal of Air Conditioner Compressor V-belt (Refer to GROUP 24 HEATERS AND AIR-CONDITIONING – Receiver, Condenser, Compressor Clutch Assembly)

Removal steps

1. Brake master cylinder heat protector
2. Oxygen sensor harness connector connection
3. Heat protector
4. Air cleaner
5. Air hose A connection
6. Air hose D connection
7. Boost hose connection
8. Intake air temperature sensor B connector connection

(Vehicles with an intercooler)

9. Radiator upper hose connection
10. Air intake pipe
11. Secondary air cleaner
12. PCV valve hose connection
13. Accelerator cable connection
14. Bolt
15. Rocker cover
16. Rocker cover gasket
17. Semi-circular packing

◆◆ Alignment of timing mark

NOTE
(1) Reverse the removal procedures to reinstall.
(2) ◆◆: Refer to "Service Points of Removal".
(3) ◆◆: Refer to "Service Points of Installation"

STB Revision

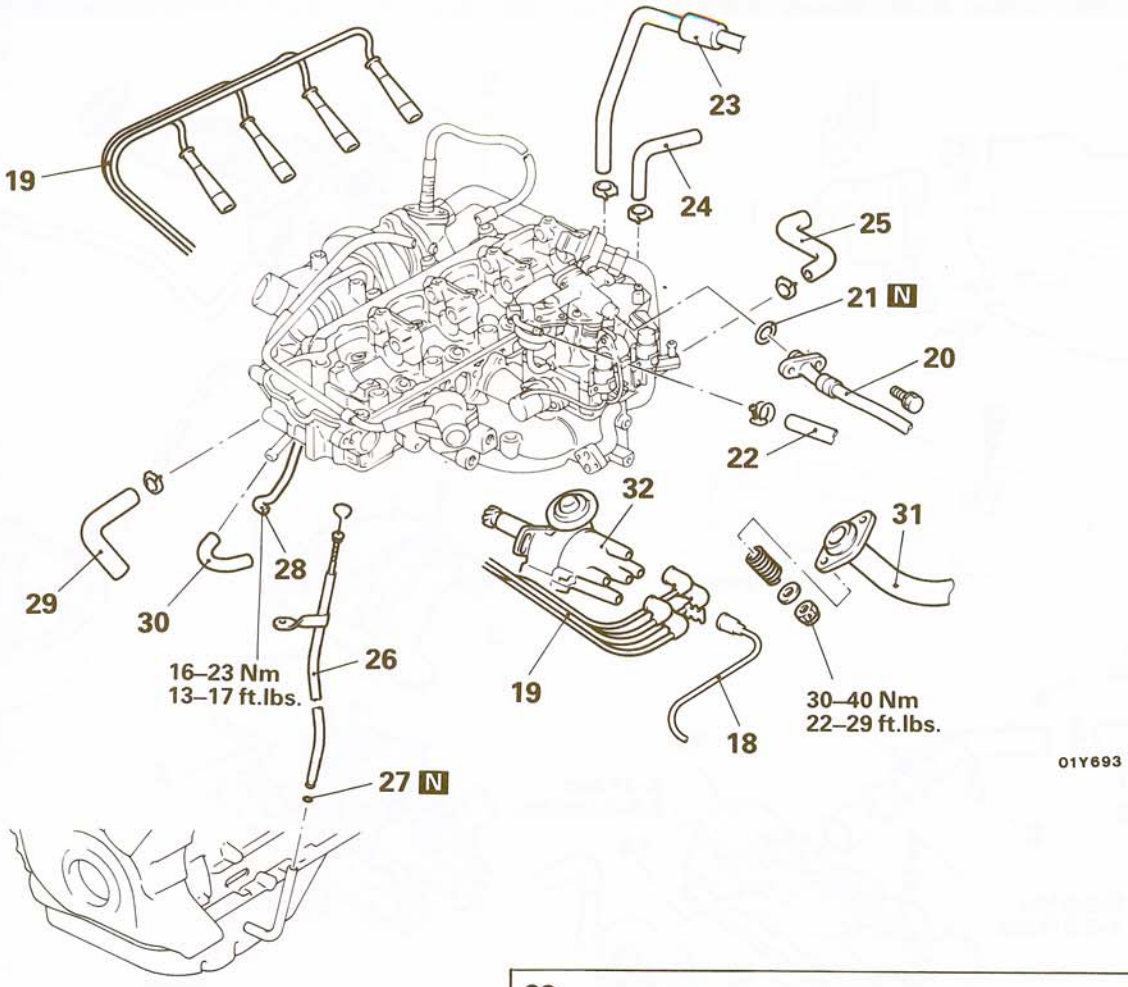

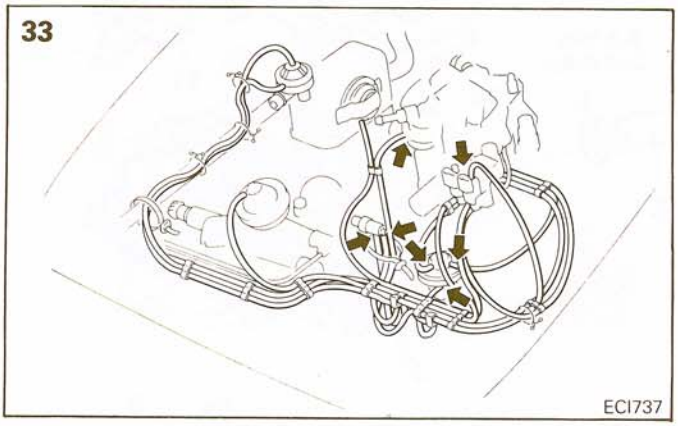

18. High tension cable connection
19. Spark plug cable connection
20. Fuel high pressure hose connection
21. O-ring
22. Fuel return hose connection
23. Power brake booster hose connection
24. Heater hose connection
25. Water hose connection
26. Engine oil level gauge guide
27. O-ring
28. Turbocharger oil pipe connection
29. Turbocharger oil return hose connection
30. Turbocharger water hose connection
31. Rear catalytic converter connection
32. ◆◆ Distributor
33. Vacuum hose connection

NOTE
(1) Reverse the removal procedures to reinstall.
(2) ◆◆: Refer to "Service Points of Installation"
(3) N: Non-reusable parts

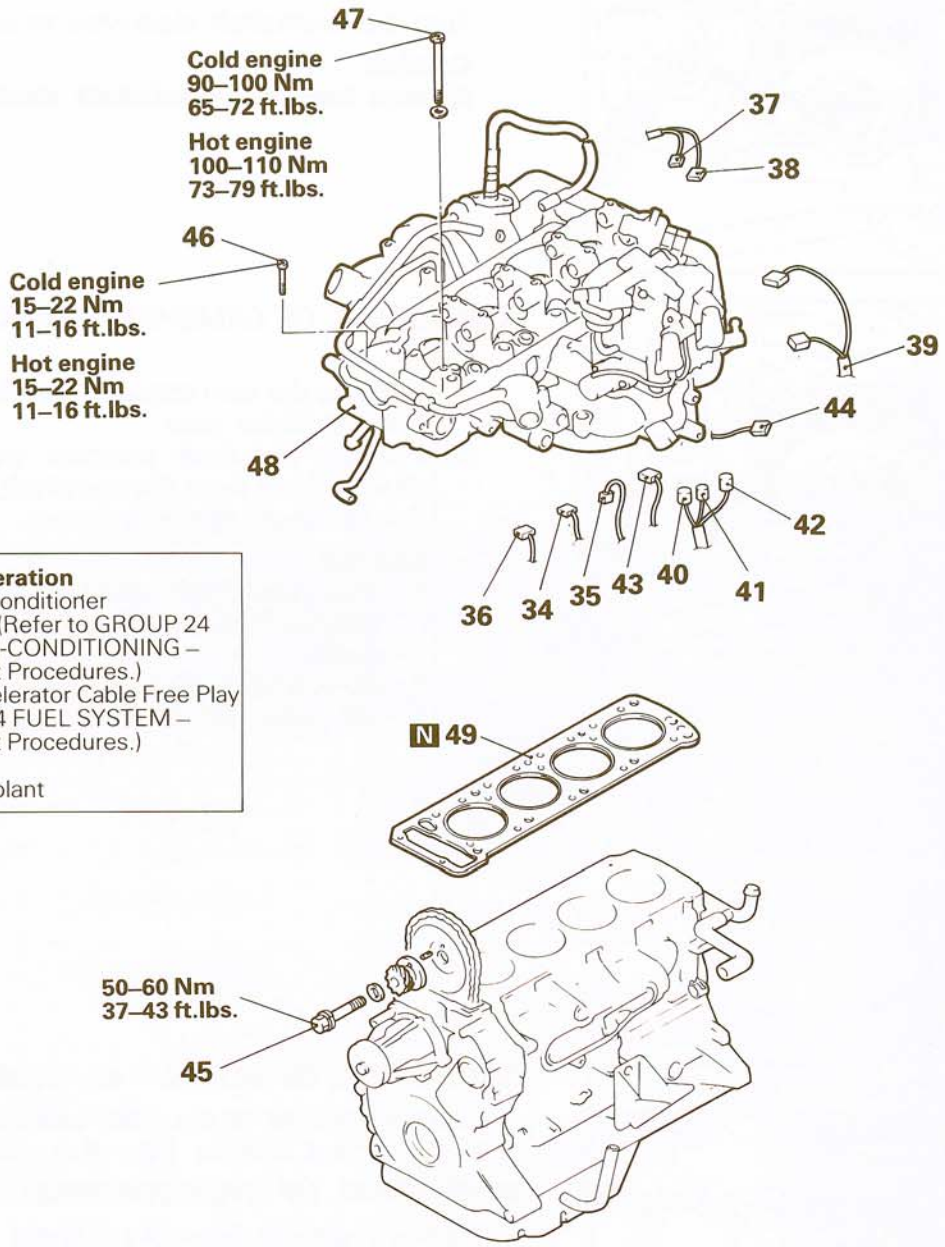

Post-installation Operation
- Adjustment of Air Conditioner Compressor V-belt (Refer to GROUP 24 HEATERS AND AIR-CONDITIONING – Service Adjustment Procedures.)
- Adjustment of Accelerator Cable Free Play (Refer to GROUP 14 FUEL SYSTEM – Service Adjustment Procedures.)
- Refilling Engine Oil
- Refilling Engine Coolant

34. Water temperature unit harness connector connection
35. Water temperature sensor harness connector connection
36. Water temperature switch harness connector connection
37. Secondary air solenoid valve harness connector connection
38. EGR solenoid valve harness connector connection
39. Injector harness connector connection
40. Throttle position sensor harness connector connection
41. ISC servo harness connector connection
42. Motor position sensor harness connector connection
43. Distributor signal generator harness connector connection
44. Ground cable connector connection
45. Camshaft sprocket to camshaft bolt
46. Bolt
47. Cylinder head bolt
48. Cylinder head
49. Cylinder head gasket

NOTE
(1) Reverse the removal procedures to reinstall.
(2) ◀▶: Refer to "Service Points of Removal".
(3) ▶◀: Refer to "Service Points of Installation"
(4) N: Non-reusable parts

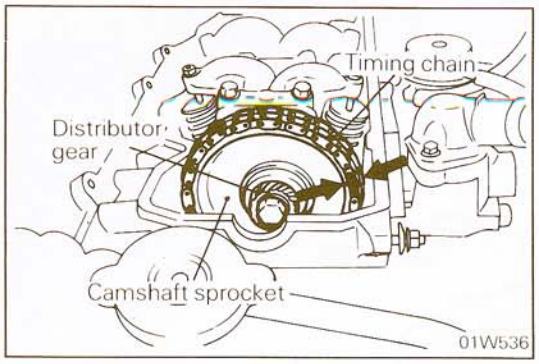

SERVICE POINTS OF REMOVAL

N09JBAB

- **ALIGNMENT OF TIMING MARK**

Turn the crankshaft clockwise to align the timing marks.

Caution
Always turn the crankshaft clockwise.

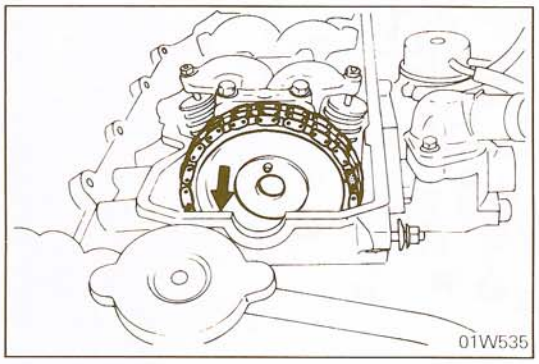

45. REMOVAL OF CAMSHAFT SPROCKET TO CAMSHAFT BOLT

(1) Remove the cam sprocket installation bolt, and remove the distributor gear.
(2) Pull the camshaft sprocket (with the timing chain attached) out from the camshaft, and place it on top of the camshaft sprocket holder.

Caution
1. **The crankshaft must not be rotated after the camshaft sprocket is pulled out from the camshaft.**
2. **Be careful not to allow the timing chain to come off from the camshaft sprocket.**

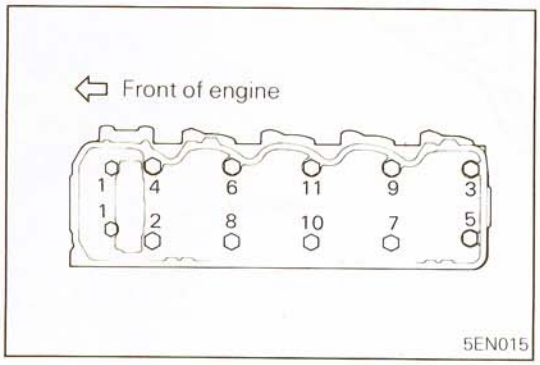

46. REMOVAL OF BOLTS / 47. CYLINDER HEAD BOLTS

Loosen the bolts (in the order indicated in the figure) in 2 or 3 steps, and remove from the cylinder head.

49. REMOVAL OF CYLINDER HEAD GASKET

Remove gaskets from the cylinder head and block completely using a gasket scraper, etc.

Caution
Be careful not to scratch the surfaces. Do not allow gasket fragments to fall into the cylinder.

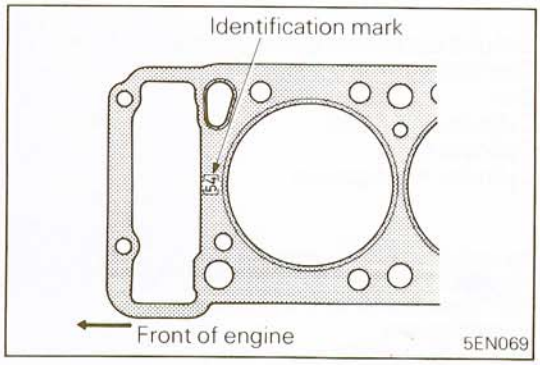

SERVICE POINTS OF INSTALLATION

N09JDCA

49. INSTALLATION OF CYLINDER HEAD GASKET

(1) Clean the cylinder block and head surfaces in contact with gasket.
(2) Lay the cylinder head gasket on the cylinder block with the identification mark at front top.

Caution
Do not apply sealant to cylinder head gasket.

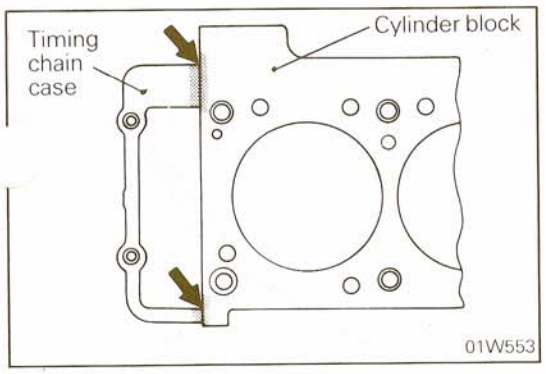

(3) Before cylinder head gasket is installed, apply specified sealant to top surface of each butt joint between cylinder block and timing chain case.

Specified sealant: 3M ART Part No. 8660 or equivalent

Caution
Be careful not to allow sealant to enter the oil hole in the cylinder block.

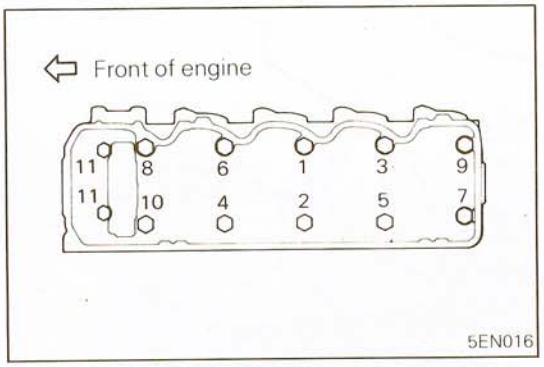

47. INSTALLATION OF CYLINDER HEAD BOLTS / 46. BOLTS

Tighten the bolts (in the order indicated in the illustration) in 2 or 3 steps, and finally tighten them at the specified torque.

32. INSTALLATION OF DISTRIBUTOR

Refer to GROUP 8 ELECTRICAL – Distributor.

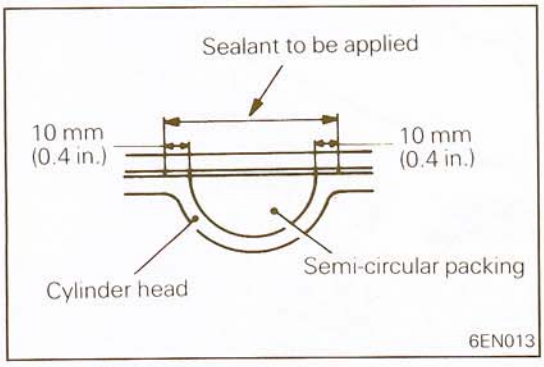

17. APPLICATION OF SEALANT TO SEMI-CIRCULAR PACKING

Apply a coating of the specified sealant to the semi-circular gasket and the cylinder head top surfaces, and then tighten the rocker cover assembly at the specified torque.

Specified sealant: 3M ART Part No. 8660 or equivalent

Caution
If they are overtorqued, a deformed rocker cover or oil leakage could result.

ENGINE MOUNTING

N09GA--

REMOVAL AND INSTALLATION

Vehicles without an intercooler

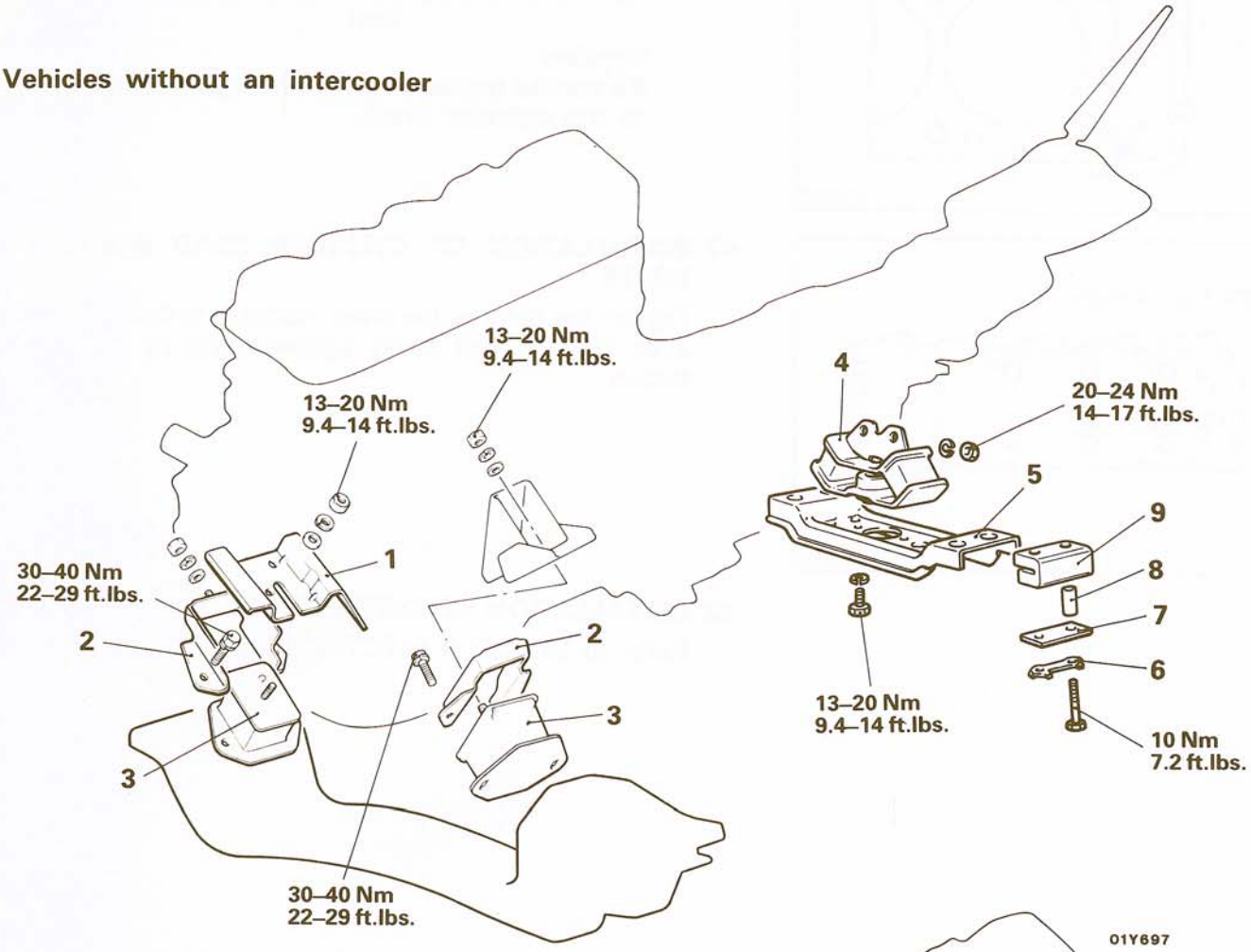

Vehicles with an intercooler

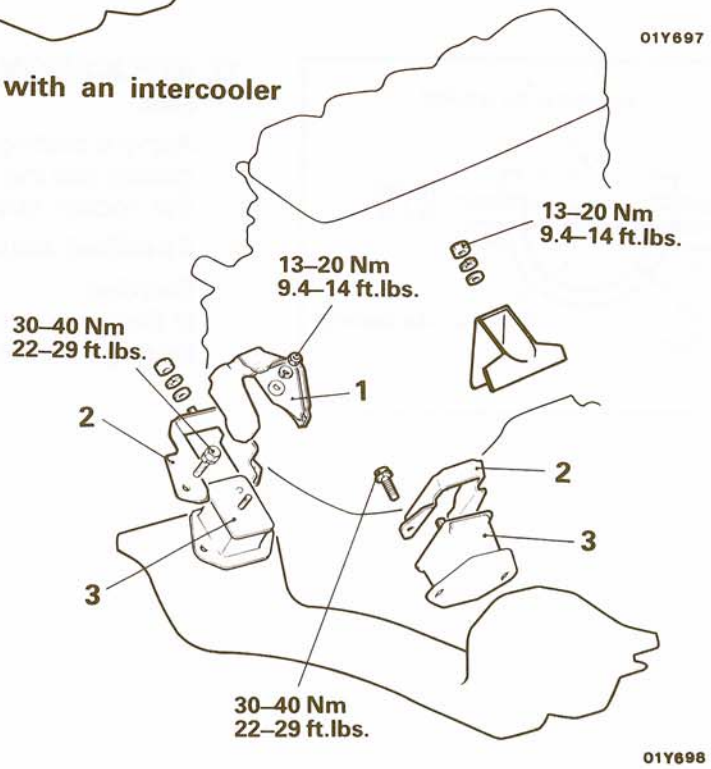

Front mounting

1. Heat protector
2. Front insulator stopper
3. Engine mounting front insulator

Rear mounting

4. Engine mounting rear insulator
5. Engine support bracket
6. Lock washer
7. Plate
8. Lower cushion
9. Upper cushion

NOTE
(1) ◆◆: Refer to "Service Points of Removal".
(2) ◆◆: Refer to "Service Points of Installation".

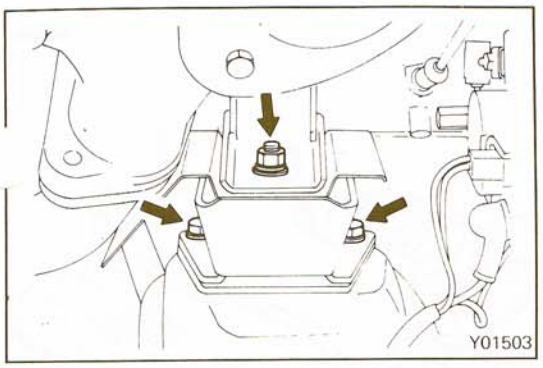

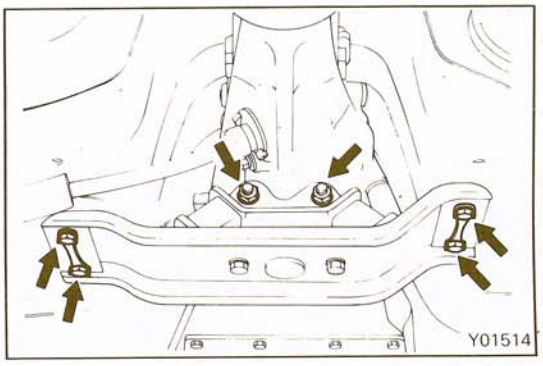

SERVICE POINTS OF REMOVAL N09GBAC

3. REMOVAL OF ENGINE MOUNTING FRONT INSULATOR

(1) Remove the engine mounting nuts and bolts from the front insulators.
(2) Attach a chain to the engine hangers.
(3) Using an engine hoist, raise the engine and remove the insulators.

Caution
Avoid applying a strain on the radiator and fuel hoses and cables by raising the engine too high.

4. REMOVAL OF ENGINE MOUNTING REAR INSULATOR

(1) Support the transmission with a jack.
(2) Remove the support brakcet and insulator assembly.

INSPECTION N09GCAB

- Check the insulators for cracks, separation and deformation.
- Check the cushion pad for cracks and wear.
- Check the engine support bracket for deformation and corrosion.

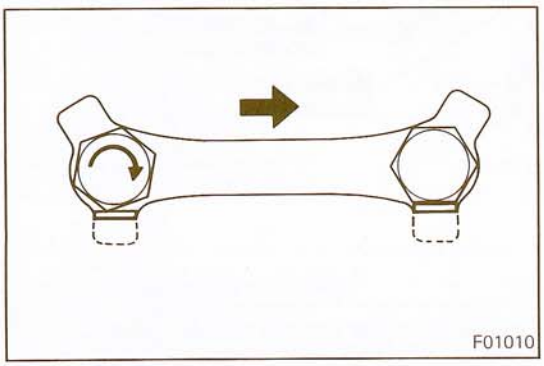

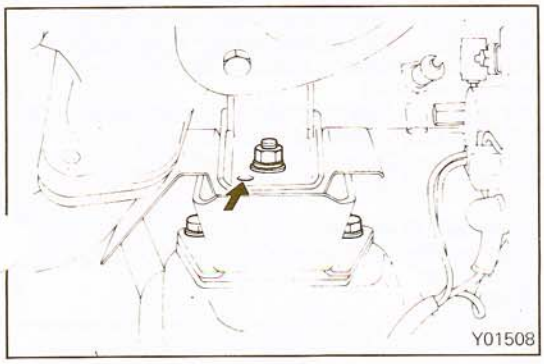

SERVICE POINTS OF INSTALLATION N09GDAC

6. INSTALLATION OF LOCK WASHER

Install the rear insulator and bend the lock washer tabs to keep the engine support bracket mounting bolts from turning.

Caution
Do not distort rubber portions, and never stain rubber portions with fuel or oil.

3. INSTALLATION OF ENGINE MOUNTING FRONT INSULATOR

Make sure that the locating boss and hole are in alignment.

Caution
Do not distort rubber portions, and never stain rubber portions with fuel or oil.

ENGINE AND TRANSMISSION ASSEMBLY

N09SA--

REMOVAL AND INSTALLATION

Pre-removal Operation
- Draining Engine Coolant
- Draining Engine Oil
- Removal of Residual Pressure in Fuel High Pressure Hose (Refer to GROUP 14 FUEL SYSTEM – Service Adjustment Procedures.)
- Draining Transmission Oil or Fluid
- Removal of Under Cover (Refer to GROUP 23 BODY – Loose Panel.)
- Removal of Hood (Refer to GROUP 23 BODY – Hood.)
- Draining Clutch Fluid

1. Air cleaner
2. Heat protector
3. Oxygen sensor harness connector
4. Intercooler air hose A connection
5. Intercooler air hose D connection
6. Power brake booster vacuum hose connection
7. Heater hose connection
8. Power steering oil pump V-belt
9. Air conditioner compressor
10. ◆◆ Power steering oil pump
11. ◆◆ Air conditioner compressor
12. Rear catalytic converter connection

NOTE
◆◆: Refer to "Service Points of Removal".

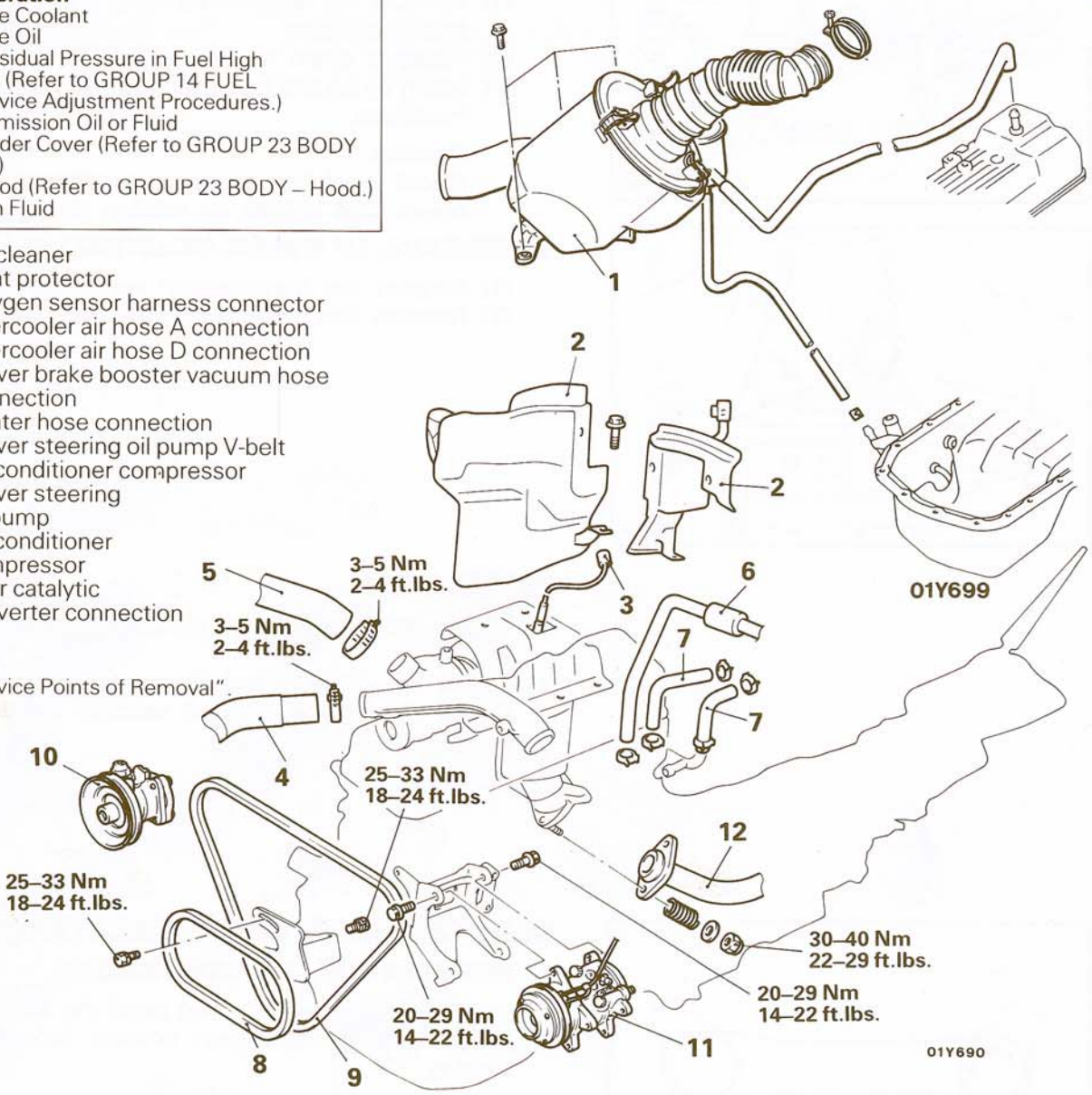

Post-installation Operation
- Refilling Engine Coolant
- Refilling Engine Oil
- Refilling Transmission Oil or Fluid
- Refilling Clutch Fluid
- Installation of Under Cover (Refer to GROUP 23 BODY – Loose Panel.)
- Installation of Hood (Refer to GROUP 23 BODY – Hood.)
- Bleeding Clutch Line (Refer to GROUP 6 CLUTCH – Service Adjustment Procedures.)
- Adjustment of Air Conditioner Compressor V-belt Tension (Refer to GROUP 24 HEATERS AND AIR-CONDITIONING – Service Adjustment Procedures.)
- Adjustment of Power Steering Oil Pump V-belt (Refer to GROUP 19 STEERING – POWER – Service Adjustment Procedures.)
- Adjustment of Accelerator Cable Free Play (Refer to GROUP 14 FUEL SYSTEM – Service Adjustment Procedures.)
- Adjustment of Clutch Pedal Cable Free Play (Refer to GROUP 6 CLUTCH – Service Adjustment Procedures.)
- Adjustment of Hood (Refer to GROUP 23 BODY – Service Adjustment Procedures.)
- Adjustment of Engine (Refer to GROUP 0 LUBRICATION AND MAINTENANCE – Maintenance Service.)
- Checking Oil, Engine Coolant or Fluid Leaks
- Checking Meter and Gauge Operation
- Rod Test
  (1) Steering Wheel Operation
  (2) Transmission Gear Shift Lever Operation
  (3) Clutch Operation
  (4) Brake Operation

STB Revision

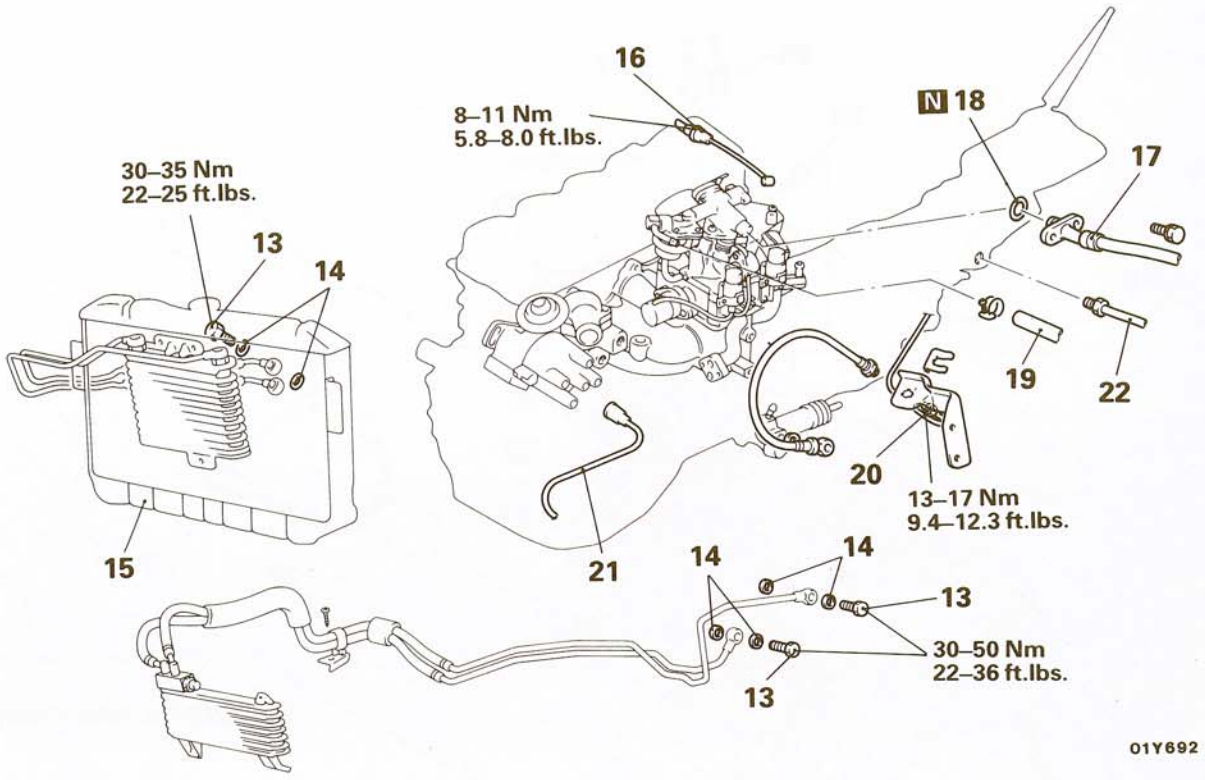

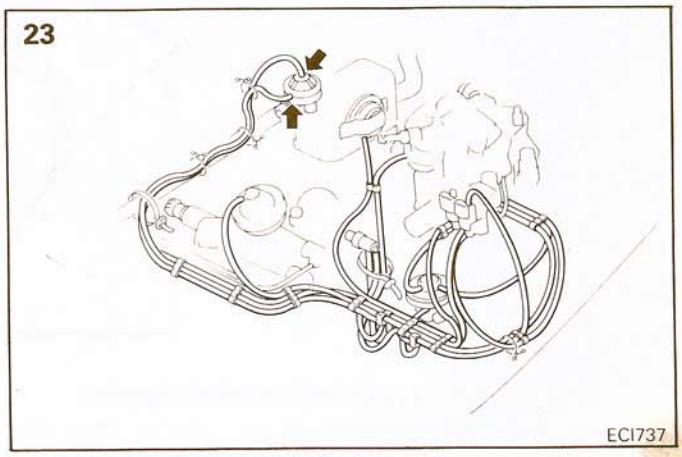

13. Eye bolt
14. Gasket
15. Radiator
16. Accelerator cable connection
17. Fuel high pressure hose connection
18. O-ring
19. Fuel return hose connection
20. Clutch tube connection
21. High tension cable connection
22. Speedometer cable connection
23. Vacuum hose connection

NOTE
N: Non-reusable parts

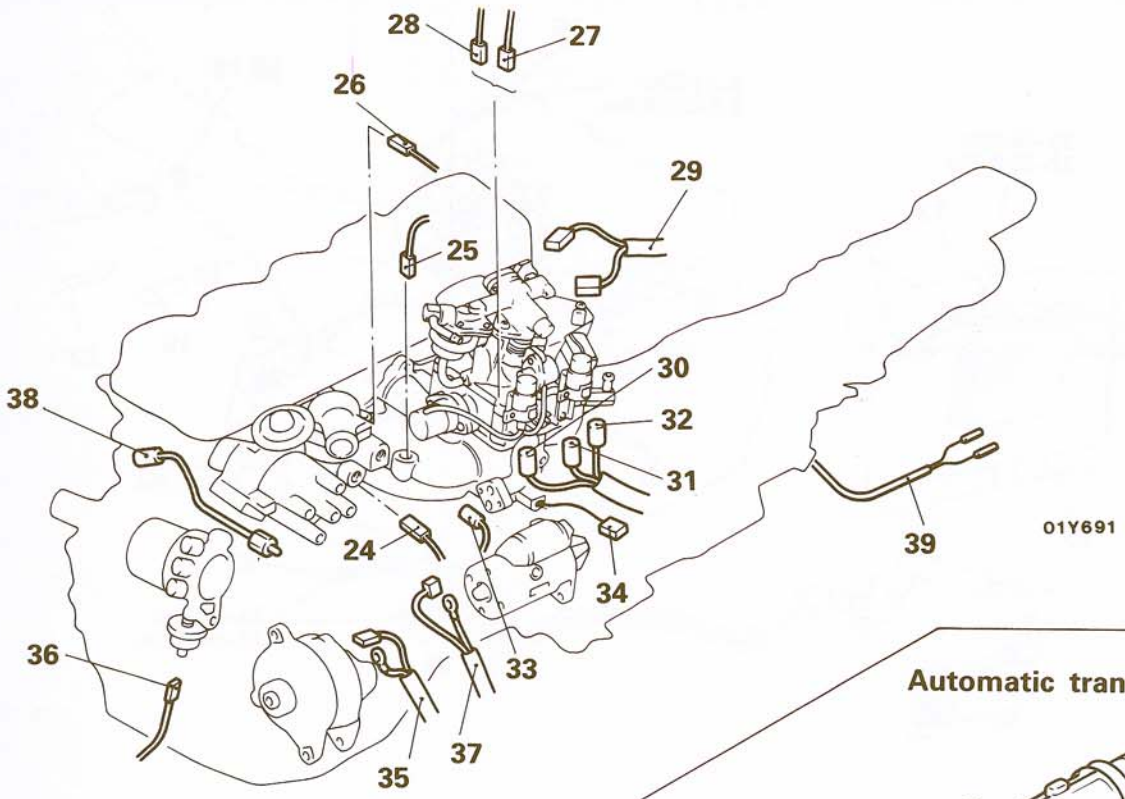

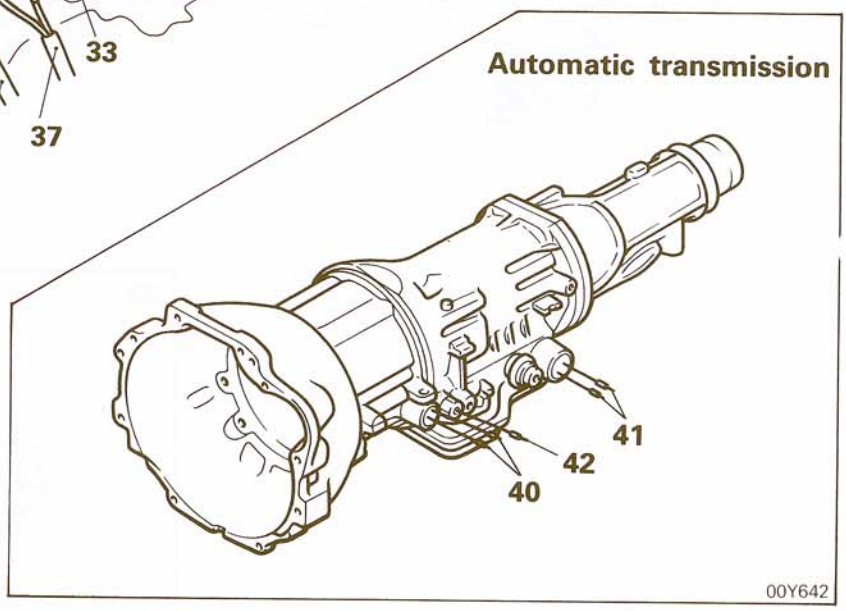

24. Water temperature unit harness connector connection
25. Water temperature sensor harness connector connection
26. Water temperature switch harness connector connection
27. Secondary air solenoid valve harness connector connection
28. EGR solenoid valve harness connector connection
29. Injector harness connector connection
30. Throttle position sensor harness connector connection
31. ISC servo harness connector connection
32. Motor position sensor harness connector connection
33. Distributor signal generator harness connector connection
34. Ground cable connector connection
35. Alternator harness connector connection
36. Oil pressure gauge unit harness connector connection
37. Starter motor harness connector connection
38. Detonation sensor harness connector connection
39. Back-up light switch harness connector connection
40. O.D. cancel solenoid harness connector connection
41. Downshift solenoid harness connector connection
42. Inhibitor switch harness connector connection

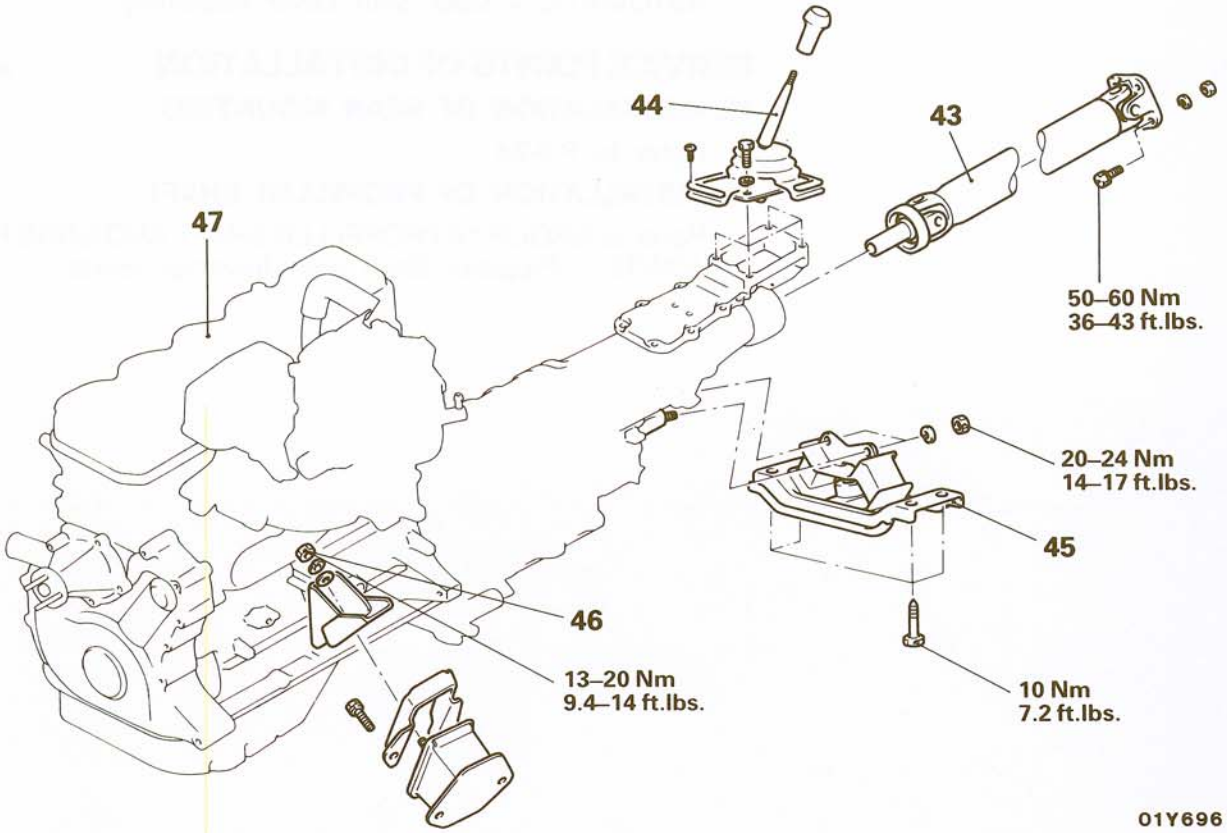

◆◆ ▶◀ 43. Propeller shaft
◆◆ 44. Gear shift lever assembly
▶◀ 45. Rear mounting
46. Nut
47. Engine and transmission assembly

NOTE
(1) ◆◆: Refer to "Service Points of Removal".
(2) ▶◀: Refer to "Service Points of Installation".
(3) N: Non-reusable parts

SERVICE POINTS OF REMOVAL N09SBCA

10. REMOVAL OF POWER STEERING OIL PUMP / 11. AIR CONDITIONER COMPRESSOR

Hold the power steering oil pump and air compressor by wires since they are removed with hoses as connected.

43. REMOVAL OF PROPELLER SHAFT

Refer to GROUP 16 PROPELLER SHAFT AND UNIVERSAL JOINTS – Propeller Shaft and Universal Joints.

STB Revision

44. REMOVAL OF GEAR SHIFT LEVER ASSEMBLY

Refer to GROUP 21 TRANSMISSION – MANUAL AND AUTOMATIC – Gear Shift Lever Assembly.

SERVICE POINTS OF INSTALLATION N09S

45. INSTALLATION OF REAR MOUNTING

Refer to P.9-24.

43. INSTALLATION OF PROPELLER SHAFT

Refer to GROUP 16 PROPELLER SHAFT AND UNIVERSAL JOINTS – Propeller Shaft and Universal Joints.

TIMING CHAIN TRAIN

N09WA- -

REMOVAL AND INSTALLATION

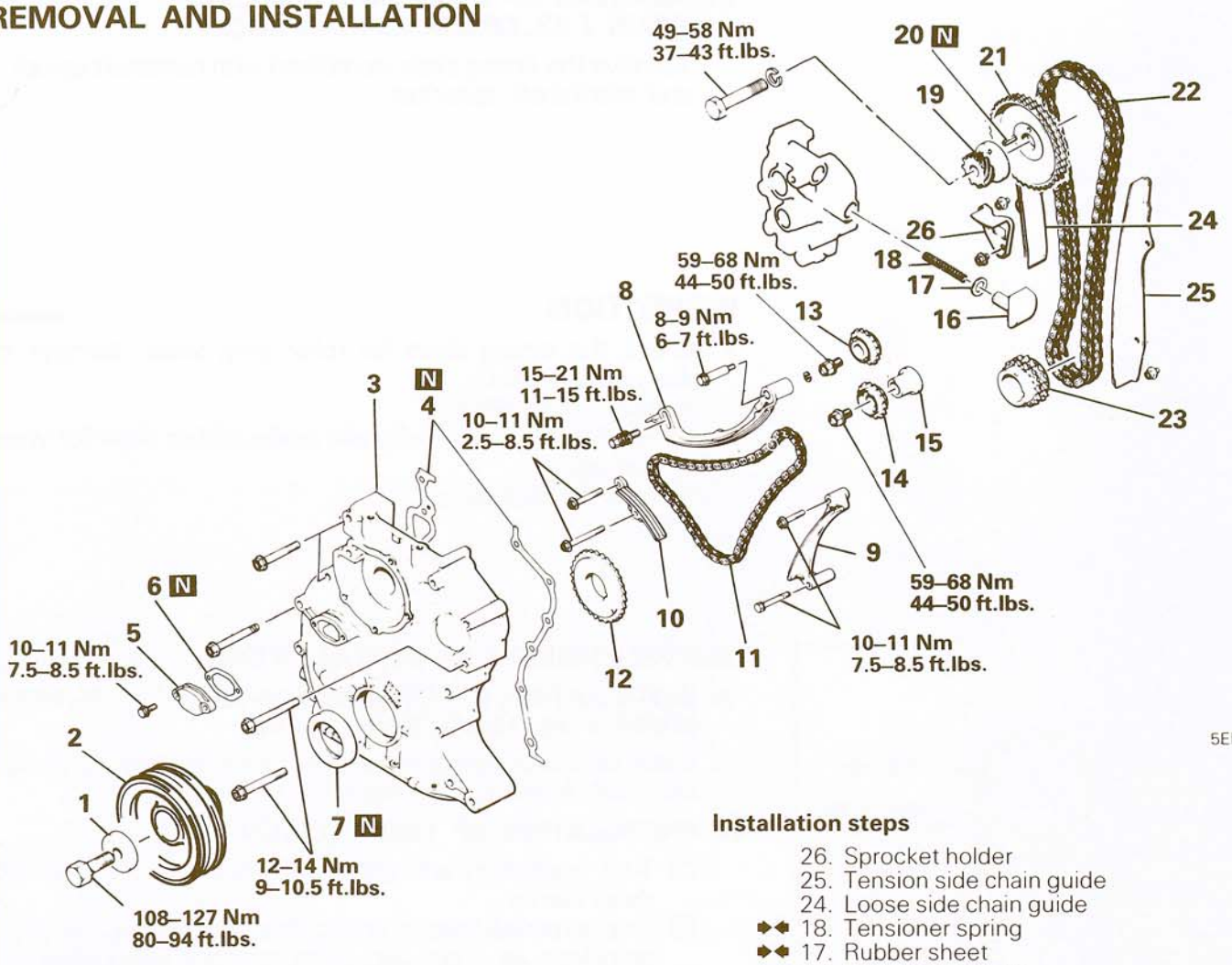

5EN196

Removal steps

1. Special washer
2. Damper pulley
3. Timing chain case
4. Chain case gasket
5. Chain guide access hole cover
6. Chain guide access hole gasket
7. Oil seal
8. Chain guide "B"
9. Chain guide "A"
10. Chain guide "C"
11. Chain "B"
12. Crankshaft sprocket "B"
13. Oil pump sprocket
14. Left silent shaft sprocket
15. Spacer
16. Tensioner sleeve
17. Rubber sheet
18. Tensioner spring
19. Distributor gear
20. Spring pin
- ◆◆ 21. Camshaft sprocket
- ◆◆ 22. Timing chain
- ◆◆ 23. Crankshaft sprocket
24. Loose side chain guide
25. Tension side chain guide
26. Sprocket holder

Installation steps

26. Sprocket holder
25. Tension side chain guide
24. Loose side chain guide
- ◆◆ 18. Tensioner spring
- ◆◆ 17. Rubber sheet
- ◆◆ 16. Tensioner sleeve
23. Crankshaft sprocket
- ◆◆ 22. Timing chain
21. Camshaft sprocket
20. Spring pin
19. Distributor gear
15. Spacer
- ◆◆ 14. Left silent shaft sprocket
13. Oil pump sprocket
- ◆◆ 12. Crankshaft sprocket "B"
- ◆◆ 11. Chain "B"
10. Chain guide "C"
9. Chain guide "A"
8. Chain guide "B"
- ◆◆ 7. Oil seal
6. Chain guide access hole gasket
5 Chain guide access hole cover
4. Chain case gasket
- ◆◆ 3. Timing chain case
2. Damper pulley
1. Special washer

NOTE
(1) ◆◆: Refer to "Service Points of Removal".
(2) ◆◆: Refer to "Service Points of Installation"
(3) N: Non-reusable parts

SERVICE POINTS OF REMOVAL N09WBAA

21. REMOVAL OF CAMSHAFT SPROCKET / 22. TIMING CHAIN / 23. CRANKSHAFT SPROCKET

Remove the timing chain combined with camshaft sprock and crankshaft sprocket.

INSPECTION N09WCAA

- Check the timing chain for roller play, wear, damage or disconnected links.
  Replace if necessary.
- Check the tensioner and chain guide rubber shoe for wear or damage.
  Replace if necessary.

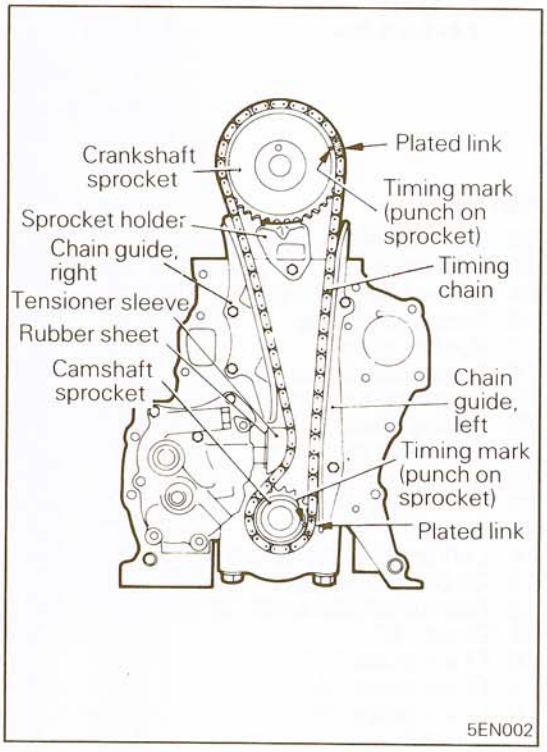

SERVICE POINTS OF INSTALLATION N09WDAA

18. INSTALLATION OF TENSIONER SPRING / 17. RUBBER SHEET / 16. TENSIONER SLEEVE

Install tensioner spring sleeve and rubber sheet to oil pump, and then install the oil pump.

22. INSTALLATION OF TIMING CHAIN

(1) Turn crankshaft until piston of No.1 cylinder is at top dead center.
(2) Line up plated links of timing chain and timing marks on sprockets as chain and sprockets are assembled.
(3) While sliding crankshaft sprocket onto crankshaft, install chain and sprocket. Place camshaft sprocket on sprocket holder.

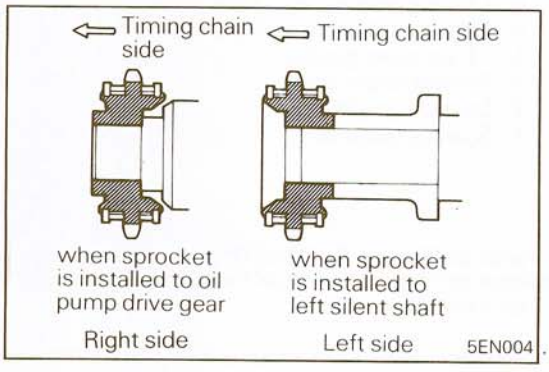

14. INSTALLATION OF LEFT SILENT SHAFT SPROCKET

(1) Assemble silent shaft sprockets to chain "B". Make sure that timing marks are in alignment with plated links.
(2) Use care not to confuse right and left sprockets, as they are installed in opposite directions.

STB Revision

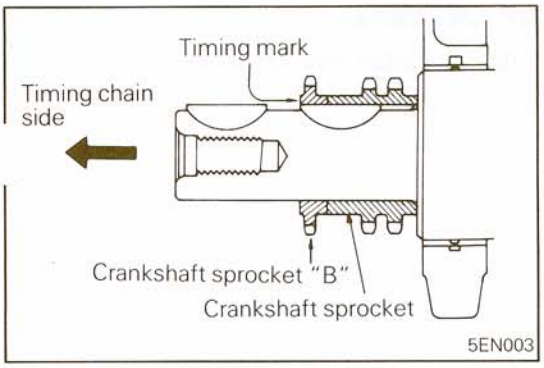

12. INSTALLATION OF CRANKSHAFT SPROCKET "B"

Install crankshaft sprocket "B" (for driving silent shafts) on crankshaft.

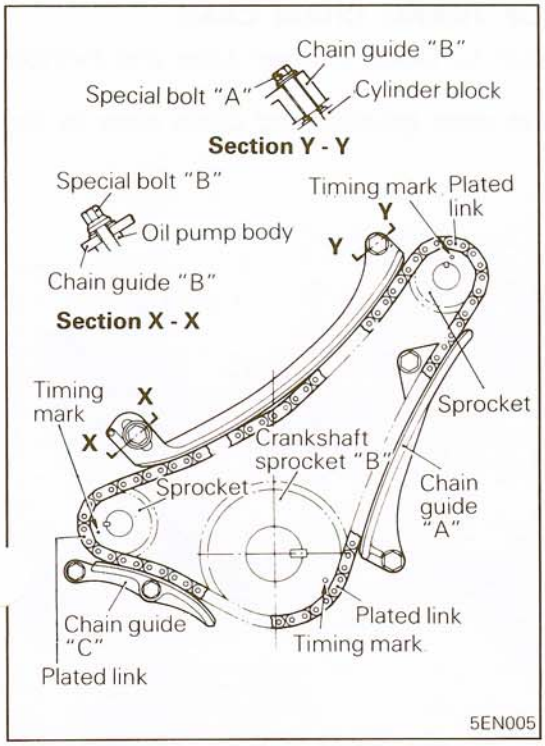

11. INSTALLATION OF CHAIN "B"

(1) Holding assembled sprockets and chain "B", align timing mark on crankshaft sprocket "B" with that on chain "B", and install sprockets to oil pump drive gear and left silent shaft. Partially tighten bolt.

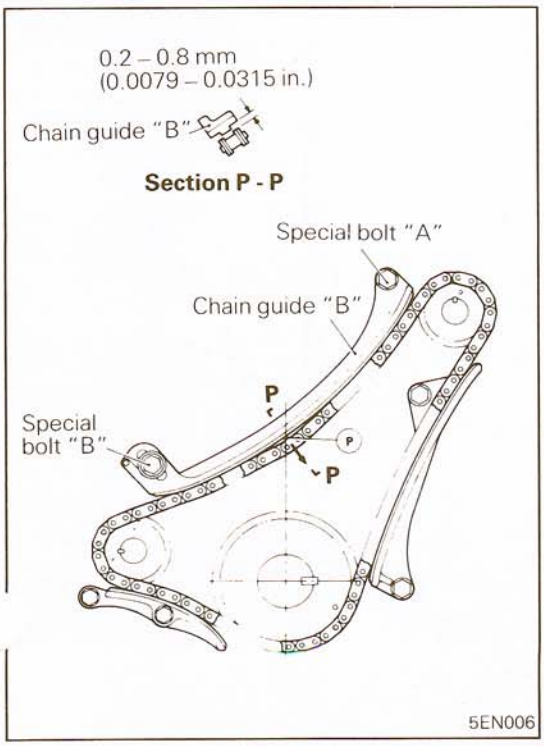

(2) Rotate both silent shaft sprockets slightly to position chain slack at point P.

(3) Adjust position of chain guide "B" so that when chain is pulled in direction of arrow with finger tips, clearance between chain guide "B" and links of chain "B" will be as shown below.

Clearance between chain and chain guide "B"
Standard value
0.2 – 0.8 mm (0.0079 – 0.0315 in.)

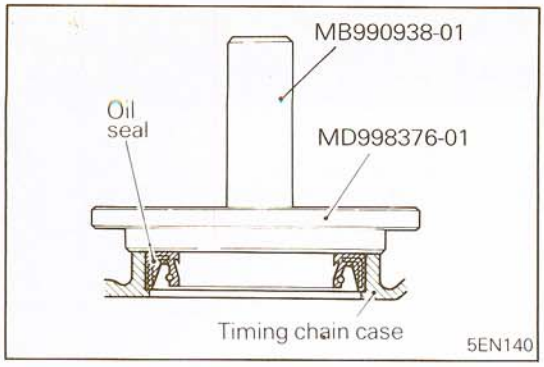

7. INSTALLATION OF OIL SEAL

Using the special tools, install the oil seal.

3. INSTALLATION OF TIMING CHAIN CASE

(1) Clean the gasket surfaces of chain case and cylinder block.
(2) Install the chain case gaskets and chain case to the cylinder block.

ROCKER ARMS, ROCKER ARM SHAFTS AND CAMSHAFT

N09LA- -

REMOVAL AND INSTALLATION

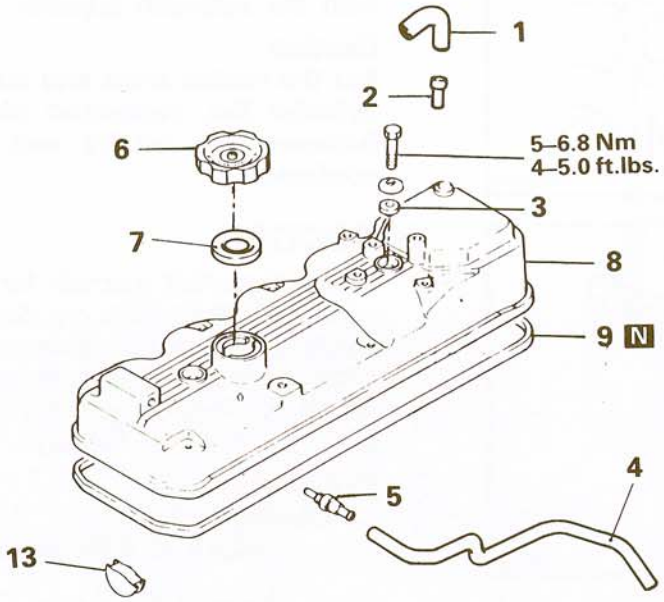

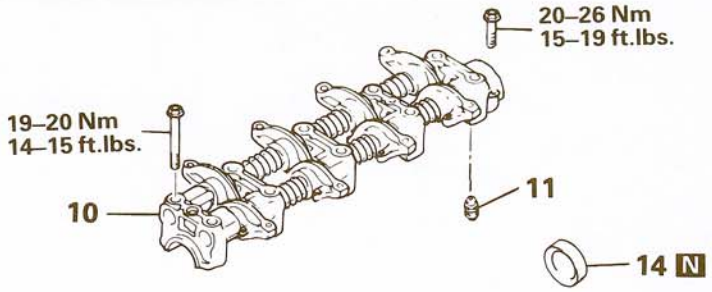

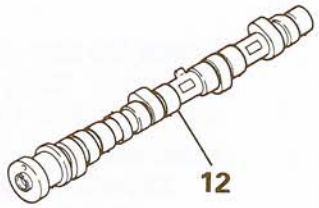

Removal steps

1. Breather hose
2. Pipe
3. Oil seal
4. P.C.V. hose
5. P.C.V. valve
6. Oil filler cap
7. Packing
8. Rocker cover
9. Rocker cover gasket

◀▶ ▶◀ 10. Rocker arm and shaft assembly

◀▶ ▶◀ 11. Auto-lash adjuster

▶◀ 12. Camshaft

▶◀ 13. Semi-circular packing

▶◀ 14. Circular packing

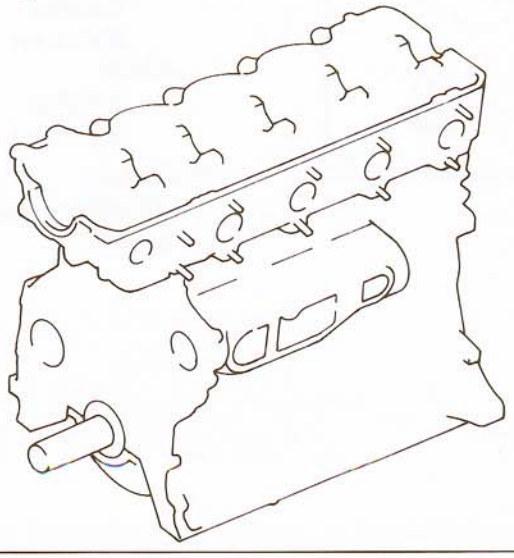

NOTE
(1) Reverse the removal procedures to reinstall.
(2) ◀▶: Refer to "Service Points of Removal".
(3) ▶◀: Refer to "Service Points of Installation"
(4) N: Non-reusable parts

5EN197

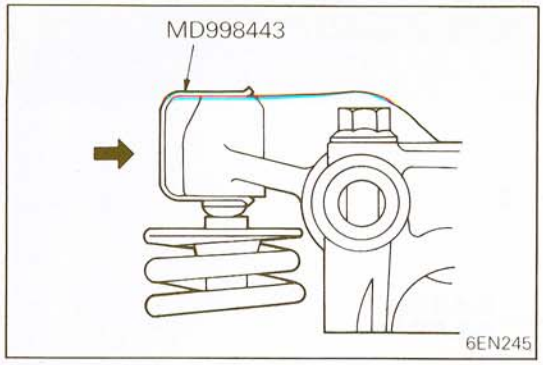

SERVICE POINTS OF REMOVAL N09LBCA

10. REMOVAL OF ROCKER ARM AND SHAFT ASSEMBLY / 11. AUTO-LASH ADJUSTER

Before disassembling the rocker arm and shaft assemb' hold the auto-lash adjuster using the special tool.

Caution
Put the rocker arms and auto-lash adjusters in order in cylinder No. separated places with clear distinction between the intake and exhaust ones to prevent confusion.

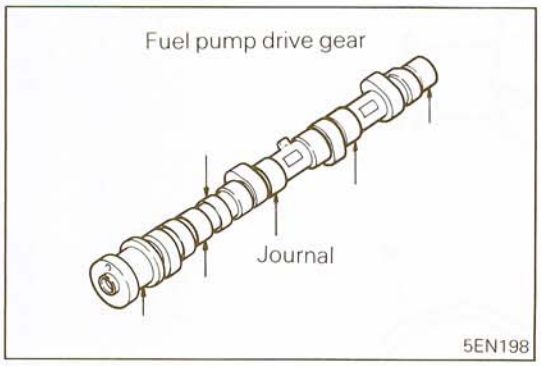

INSPECTION N09LCCA

- Check camshaft journals for wear or damage. Replace if necessary. If journals are damaged, also inspect camshaft bearings for wear or damage. If camshaft bearing is badly worn, replace cylinder head.
- Check the fuel pump drive cam and distributor drive gear teeth for wear or damage. Replace if necessary.

Camshaft:
Standard value
Height of fuel pump drive cam 37 mm (1.4567 in.)
Journal diameter 34 mm (1.3386 in.)
Oil clearance 0.03 – 0.05 mm (0.0012 – 0.0020 in.)

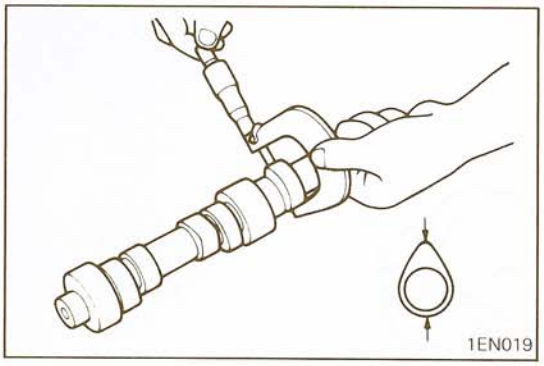

- Check the cam surface for abnormal wear and damage and replace if faulty. Measure the cam height (cam major diameter) and replace if it exceeds the service limit.

Cam height:
Standard value
Intake 42.4 mm (1.6693 in.)
Exhaust 42.4 mm (1.6693 in.)
Limit
Intake 41.9 mm (1.6506 in.)
Exhaust 41.9 mm (1.6506 in.)

End play:
Standard value 0.1 – 0.2 mm (0.004 – 0.008 in.)
Limit 0.4 mm (0.016 in.)

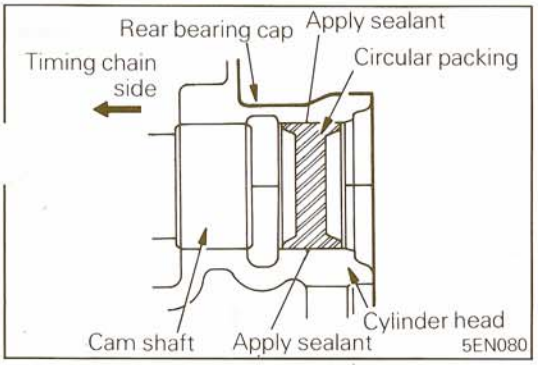

SERVICE POINTS OF INSTALLATION N09LDCA

14. INSTALLATION OF CIRCULAR PACKING

Coat the sealant to the O.D. of circular packing and install the circular packing to cylinder head.

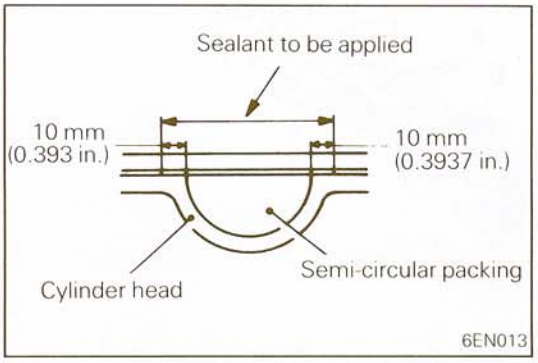

13. APPLICATION OF SEALANT TO SEMI-CIRCULAR PACKING

Apply proper amount of sealant to the packing top surface and to semi-circular portion.

Specified sealant: 3M ART Part No. 8660 or equivalent

12. INSTALLATION OF CAMSHAFT

Apply engine oil to the journals of camshaft and install it to cylinder head.

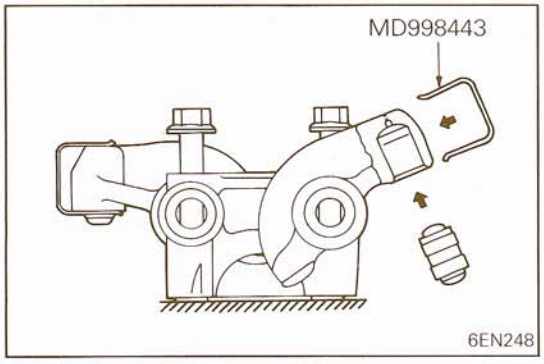

11. INSTALLATION OF AUTO-LASH ADJUSTER / 10. ROCKER ARM AND SHAFT ASSEMBLY

(1) Insert the auto-lash adjuster from below as illustrated, using care not to spill light oil from the adjuster. Then, fit the special tool to prevent the adjuster from dropping.
(2) Place the rocker arm and shaft assembly on the cylinder head and tighten the bearing cap bolt.
(3) Remove the special tool.

ROCKER ARM AND SHAFT ASSEMBLY

N09NE- -

DISASSEMBLY AND REASSEMBLY

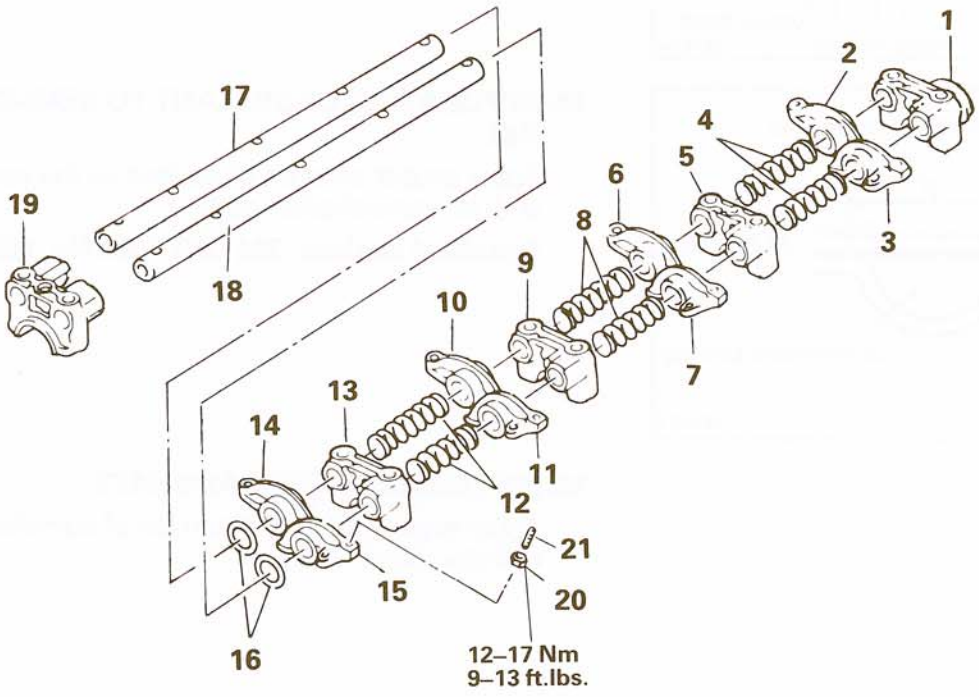

Disassembly steps

1. Rear bearing cap
2. Rocker arm "C"
3. Rocker arm "A"
4. Rocker shaft spring
- ◆◆ 5. Bearing cap No. 4
6. Rocker arm "C"
7. Rocker arm "A"
8. Rocker shaft spring
- ◆◆ 9. Bearing cap No. 3
10. Rocker arm "C"
11. Rocker arm "A"
12. Rocker shaft spring
- ◆◆ 13. Bearing cap No. 2
14. Rocker arm "C"
15. Rocker arm "A"
- ◆◆ 16. Wave washer
- ◆◆ 17. Right rocker arm shaft
- ◆◆ 18. Left rocker arm shaft
- ◆◆ 19. Front bearing cap
20. Nut
21. Adjusting screw

NOTE
(1) Reverse the disassembly procedures to reassemble.
(2) ◆◆: Refer to "Service Points of Reassembly".

5EN199

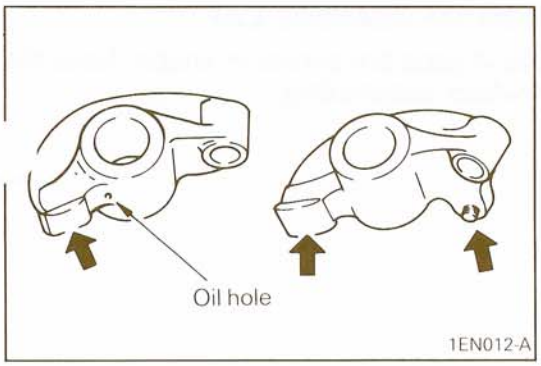

INSPECTIONS N09NGAB

ROCKER ARM

(1) Check rocker arms for wear or damage. Replace if necessary.
(2) Check to ensure that oil holes are clear.

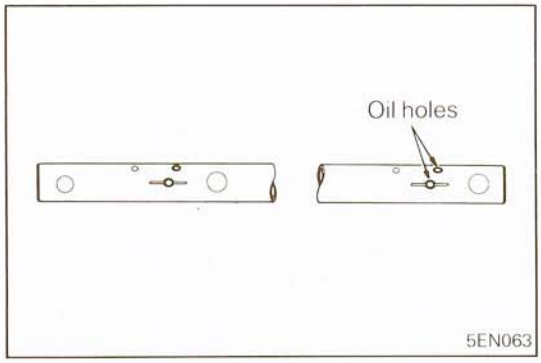

ROCKER ARM SHAFT

(1) Check rocker arm mounting portions of rocker arm shaft for wear or damage. Replace as necessary.
(2) Check to ensure that oil holes are clear.

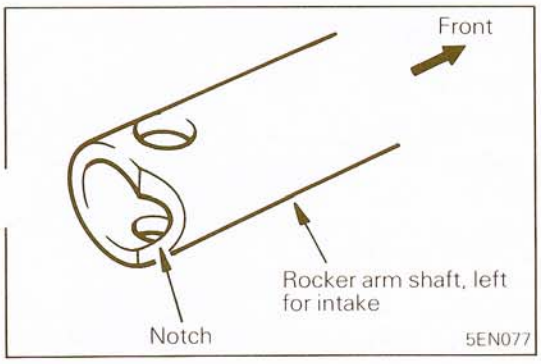

SERVICE POINTS OF REASSEMBLY N09NHCA

19. INSTALLATION OF FRONT BEARING CAP / 18. LEFT ROCKER ARM SHAFT / 17. RIGHT ROCKER ARM SHAFT

(1) Insert the left and right rocker shafts into the front bearing cap. The rear end of left (intake) rocker arm shaft has a notch.
(2) Align the mating mark of the rocker arm shaft front end to the mating mark of the front bearing cap. Then insert the bolts to hold shafts in bearing cap.

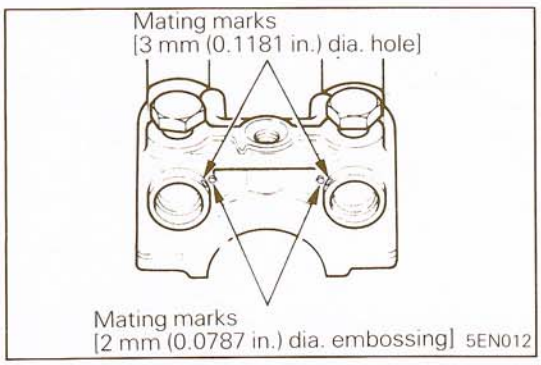

(3) Assemble the rocker arm shaft so that the alignment mark at the front end matches the alignment mark of the front bearing cap.

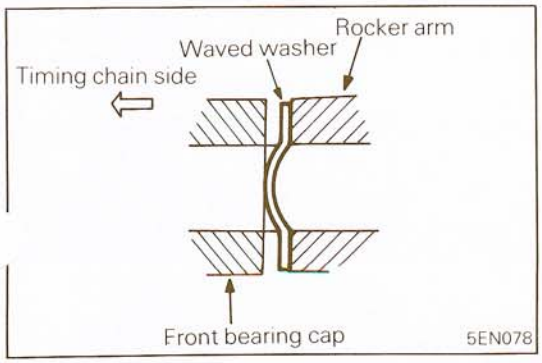

16. INSTALLATION OF WAVE WASHER

Install the waved washer in the direction shown in the illustration.

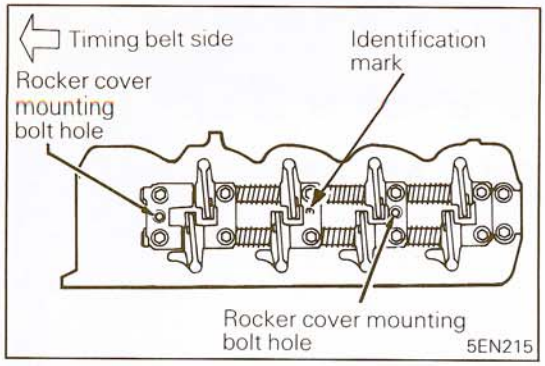

13. 9. 5. INSTALLATION OF BEARING CAP

No. 2, No. 3 and No. 4 caps are similar in shape. Note the stamped cap No. when assembling.

CYLINDER HEAD

N09OA- -

REMOVAL AND INSTALLATION

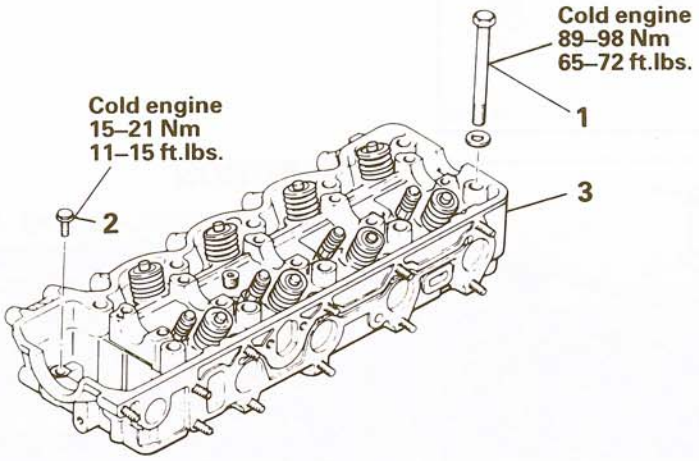

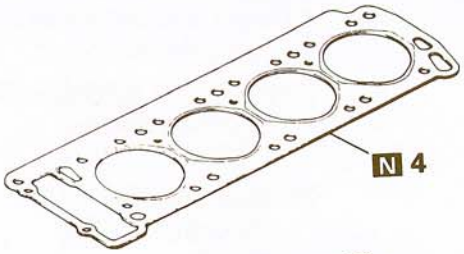

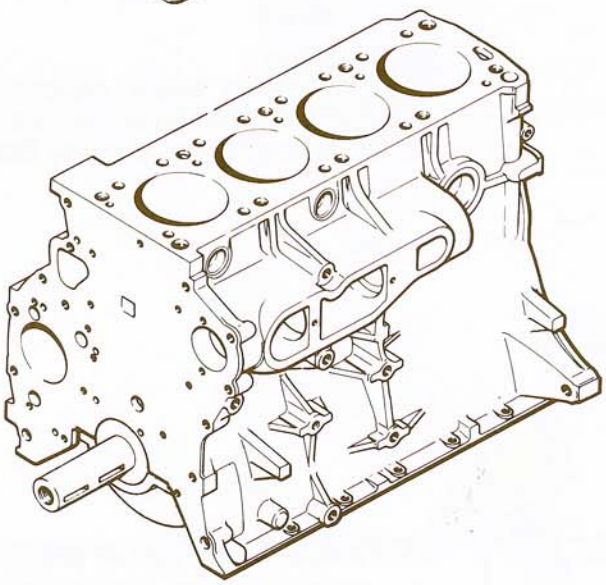

Removal steps

◆◆ ▶◀ 1. Cylinder head bolt
◆◆ ▶◀ 2. Bolt
3. Cylinder head
▶◀ 4. Cylinder head gasket

NOTE
(1) Reverse the removal procedures to reinstall.
(2) ◆◆: Refer to "Service Points of Removal".
(3) ▶◀: Refer to "Service Points of Installation"
(4) N: Non-reusable parts

5EN200

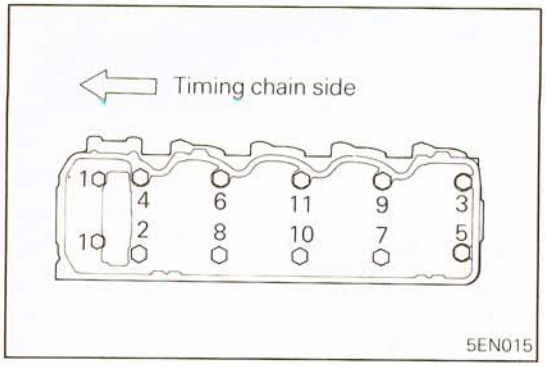

SERVICE POINTS OF REMOVAL

N09OBAB

1. REMOVAL OF CYLINDER HEAD BOLT / 2. BOLT

Remove cylinder head bolts in sequence shown in illustration.

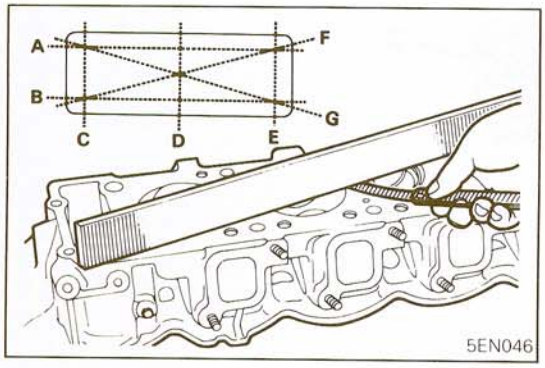

INSPECTION

N09OCAB

- Remove scale, sealing compound and carbon deposits completely. After cleaning oil passages, apply compressed air to make certain that the passages are not clogged.
- Check the jet air passage and EGR gas passage for clogging.
- Visually check the cylinder head for cracks, damage and water leakage.
- Check cylinder head gasket surface for flatness with a straight edge as shown in illustration.
- If flatness exceeds service limit in any direction, either replace cylinder head or lightly machine the cylinder head gasket surface.

Flatness of cylinder head gasket surface:

Standard value	**Max. 0.05 mm (0.0020 in.)**
Limit	**0.2 mm (0.0079 in.)**

Overall height:

Standard value	**90.0 mm (3.5433 in.,**
Limit	**89.8 mm (3.5354 in.)**

Caution

If cylinder block gasket surface has already been ground, thickness of the removed stock should be included in the grinding limit of −0.2 mm (−0.0079 in.).

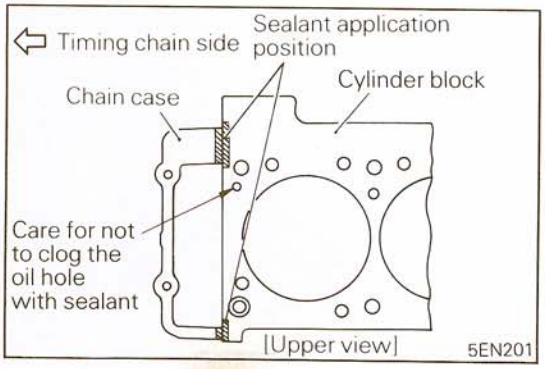

SERVICE POINTS OF INSTALLATION

N09ODAB

4. INSTALLATION OF CYLINDER HEAD GASKET

(1) Clean gasket surfaces of cylinder head and cylinder block.

(2) Apply sealant or equivalent at two positions – upper ends of the cylinder block and chain case mating surface, as shown in the illustration.

Specified sealant: 3M ART Part No. 8660 or equivalent

STB Revision

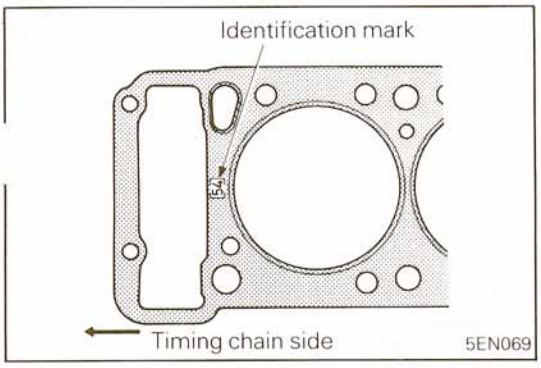

(3) Be sure to position the gasket on the cylinder block with the identification mark up.

Identification mark: "54"

(4) Install aligning with the dowel pin on the cylinder block top surface.

Caution
Do not apply sealant to cylinder head gasket.

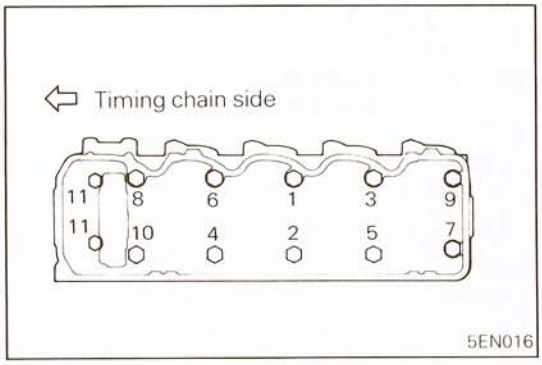

2. INSTALLATION OF BOLT / 1. CYLINDER HEAD BOLT

Install cylinder head bolts. Starting at top center, tighten all cylinder head bolts to 1/2 of specified torque in sequence shown in illustration.

VALVES AND VALVE SPRINGS

N09PE--

DISASSEMBLY AND REASSEMBLY

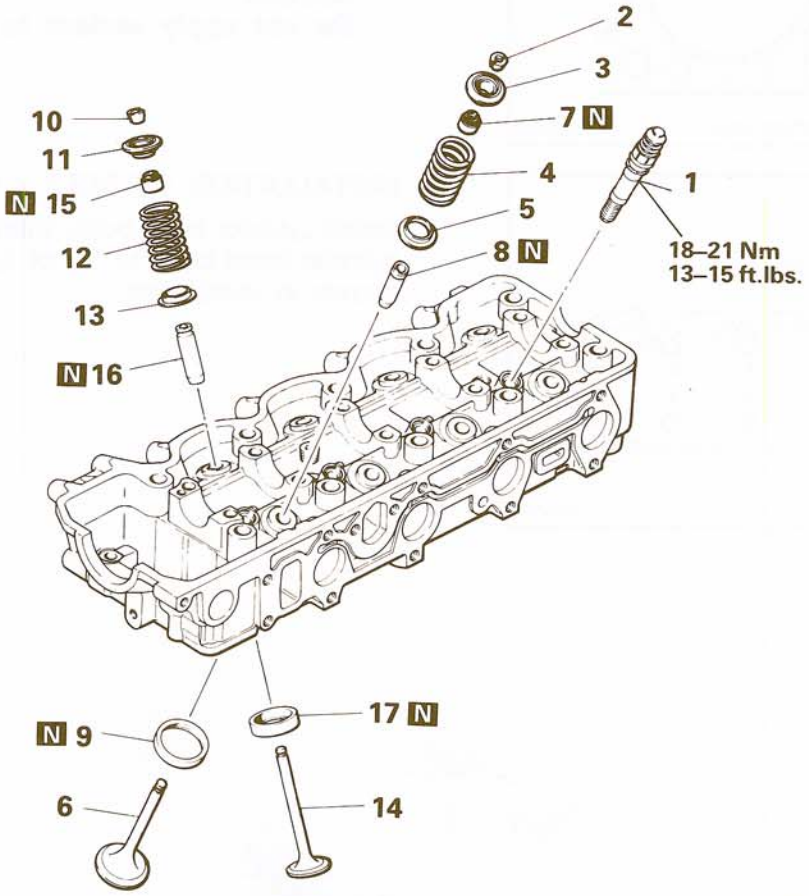

Disassembly steps

- ◆◆ ▶◀ 1. Jet valve assembly
- ◆◆ ▶◀ 2. Retainer lock
- 3. Valve spring retainer
- ▶◀ 4. Valve spring
- ▶◀ 5. Valve spring seat
- ▶◀ 6. Intake valve
- ◆◆ ▶◀ 7. Valve stem seal
- 8. Intake valve guide
- 9. Intake valve seat
- ◆◆ ▶◀ 10. Retainer lock
- 11. Valve spring retainer
- ▶◀ 12. Valve spring
- ▶◀ 13. Valve spring seat
- ▶◀ 14. Exhaust valve
- ◆◆ ▶◀ 15. Valve stem seal
- 16. Exhaust valve guide
- 17. Exhaust valve seat

NOTE
(1) Reverse the disassembly procedures to reassemble.
(2) ◆◆: Refer to "Service Points of Disassembly".
(3) ▶◀: Refer to "Service Points of Reassembly".
(4) N: Non-reusable parts

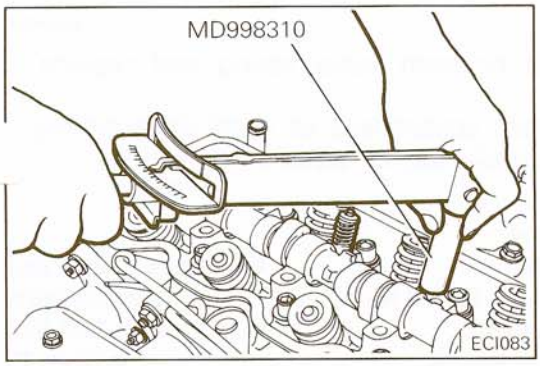

SERVICE POINTS OF DISASSEMBLY N09PFAA

1. REMOVAL OF JET VALVE ASSEMBLY

Using the special tool, remove the jet valve assembly.

Caution
When the special tool is used, make certain that the wrench is not tilted with respect to the center of the jet valve. If the tool is tilted, the valve stem might be bent by the force exerted on the valve spring retainer, resulting in defective jet valve operation.

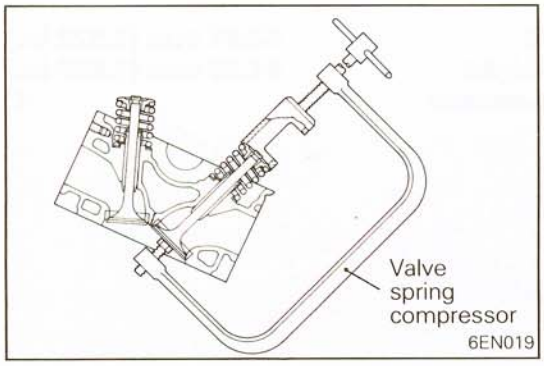

2. 10. REMOVAL OF RETAINER LOCK

(1) Using valve spring compressor, remove the retainer lock.
(2) Keep these parts in order so that they can be reinstalled in their original positions.

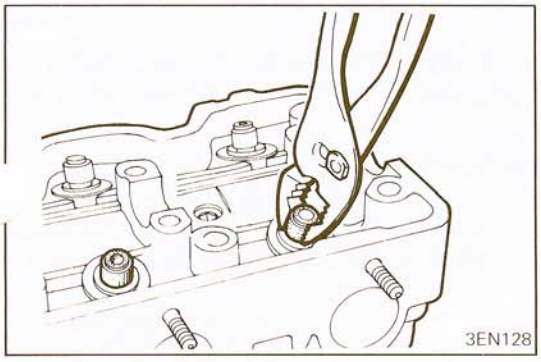

7. 15. REMOVAL OF VALVE STEM SEAL

Remove the valve stem seals with pliers and discard them.

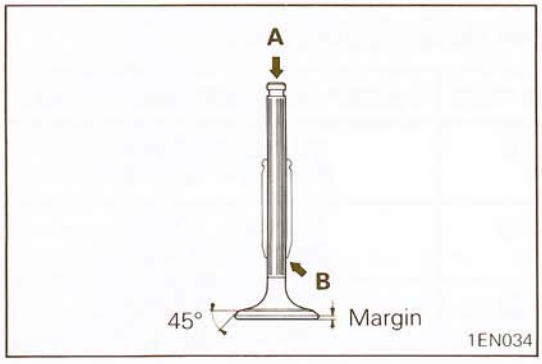

INSPECTION N09PGAA

VALVES

(1) Check each valve for wear, damage and deformation of head and stem at "B". Repair or replace excessively worn, damaged or deformed valves.
(2) If stem tip "A" has been pitted, correct with oil stone or other means. This correction must be limited to a minimum. Also reface the valve.
(3) Replace the valve if the face margin has decreased to less than limit.

Margin:

Standard value	
Intake	**1.2 mm (0.0472 in.)**
Exhaust	**2.0 mm (0.0788 in.)**
Limit	
Intake	**0.7 mm (0.028 in.)**
Exhaust	**1.5 mm (0.059 in.)**

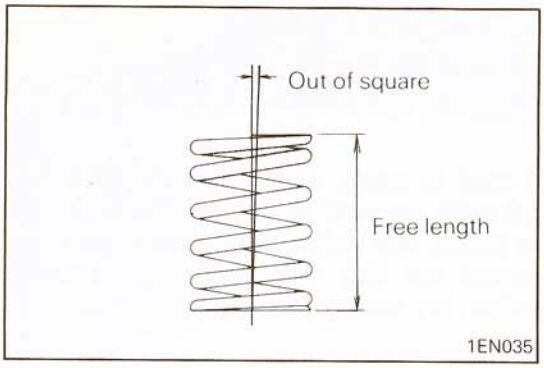

VALVE SPRINGS

N09PGBA

(1) Check free length or each valve spring and replace if necessary.
(2) Using a square, test squareness of each valve spring If spring is excessively out of square, replace it.

Valve spring:

Standard value	
Free length	**49.8 mm (1.961 in.)**
Load	**322.6 N (72 lbs.) at installed height**
Installed height	**40.4 mm (1.591 in.)**
Out of squareness	**within 2°**
Limit	
Free length	**48.81 mm (1.922 in.)**
Installed height	**41.40 mm (1.630 in.)**
Out of squareness	**4°**

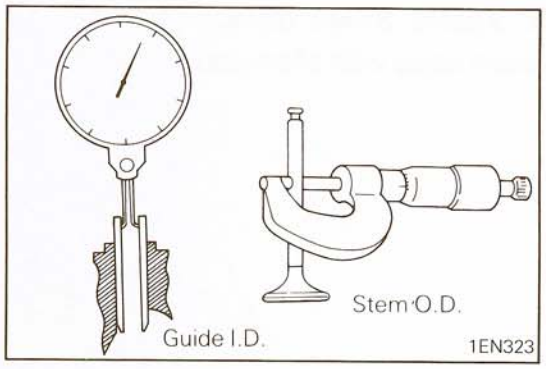

VALVE GUIDES

N09PGCA

Check the valve stem-to-guide clearance. If the clearance exceeds the service limit, replace the valve guide with new oversize part.

Valve stem-to-guide clearance:

Standard value	
Intake	**0.03 – 0.06 mm (0.0012 – 0.0024 in.)**
Exhaust	**0.05 – 0.09 mm (0.0020 – 0.0035 in.)**
Limit	
Intake	**0.1 mm (0.0039 in.)**
Exhaust	**0.15 mm (0.0059 in.)**

Valve Guide Oversizes

Size mm (in.)	Size mark	Cylinder head hole size mm (in.)
0.05 (0.002) O.S.	5	13.050 – 13.068 (0.5138 – 0.5145)
0.25 (0.010) O.S.	25	13.250 – 13.268 (0.5217 – 0.5224)
0.50 (0.020) O.S.	50	13.500 – 13.518 (0.5315 – 0.5422)

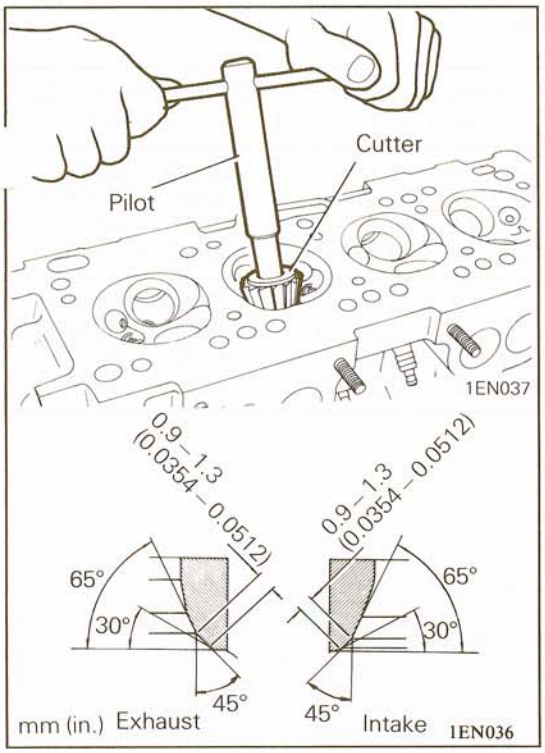

VALVE SEAT RECONDITIONING PROCEDURES

N09PHAA

(1) Check the valve guide for wear. Replace the worn guide, and then correct the seat.
(2) Recondition the valve seat with a seat grinder or cutter. The valve seat contact width should be of the specified size at the center of the valve face.
(3) The valve and valve seat should be lapped lightly with a lapping compound.

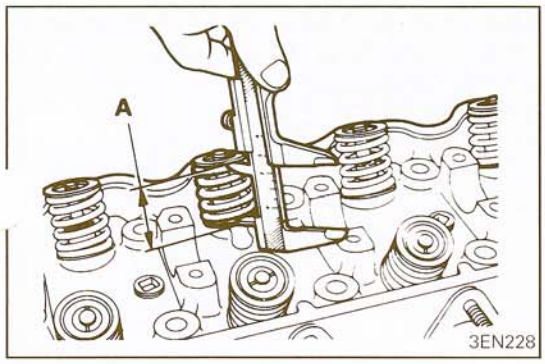

(4) Check valve seat insert sinkage. If the sinkage exceeds the service limit, replace the insert with an oversize part as described below.
(5) Measure the installed height of spring between the spring seat and the retainer with the valve spring seat, spring retainer and retainer lock installed. The amount of sinkage can be judged from the measured value.

Installed height of spring A (both intake and exhaust)
Standard value: 40.4 mm (1.5906 in.)
Limit: 41.4 mm (1.6299 in.)

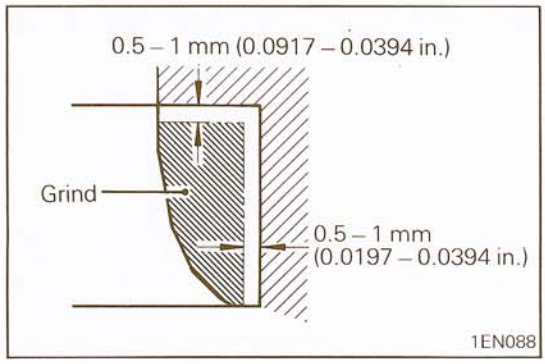

VALVE SEAT INSERT REPLACEMENT PROCEDURES

N09PIAB

(1) Grind the valve seat on its inside surface to smaller thickness before removal.

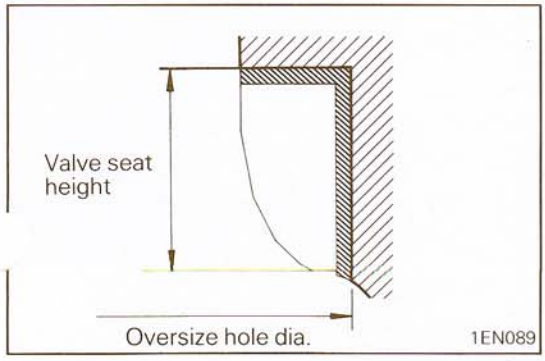

(2) Correct the installation diameter of the cylinder head side valve seat to match the oversize valve seat diameter.
(3) When installing the valve seat, heat the cylinder head to about 250°C (480°F) or cool the valve seat by liquid nitrogen.
(4) Cut the valve seat using the special tool, Valve Seat Cutter.
(5) Refer to "VALVE SEAT RECONDITIONING PROCEDURES".

Valve Seat Insert Oversizes

Description	Size mm (in.)	Size mark	Insert height H mm (in.)	Cylinder head I.D. mm (in.)
Intake valve seat insert	0.3 (0.012) O.S.	30	7.9 – 8.1 (0.3110 – 0.3189)	47.30 – 47.33 (1.8622 – 1.8632)
	0.6 (0.024) O.S.	60	8.2 – 8.4 (0.3228 – 0.3307)	47.60 – 47.63 (1.8740 – 1.8750)
Exhaust valve seat insert	0.3 (0.012) O.S.	30	7.9 – 8.1 (0.3110 – 0.3189)	40.30 – 40.33 (1.5866 – 1.5876)
	0.6 (0.024) O.S.	60	8.2 – 8.4 (0.3228 – 0.3307)	40.60 – 40.63 (1.5984 – 1.5994)

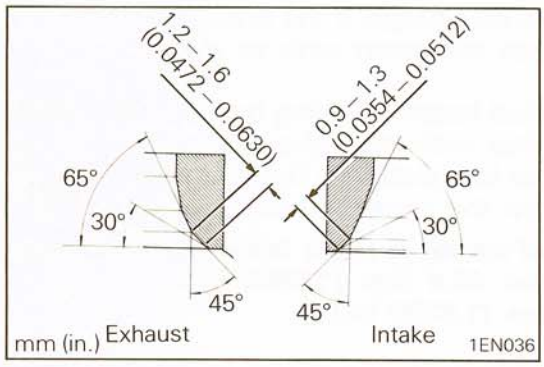

(3) Heat the cylinder head to about 250°C (480°F) and press in an oversize seat insert, and fit to the inset bore in the cylinder head at normal temperature.
(4) Cut the valve seat as illustrated.
(5) Lap the valve using lapping compound.

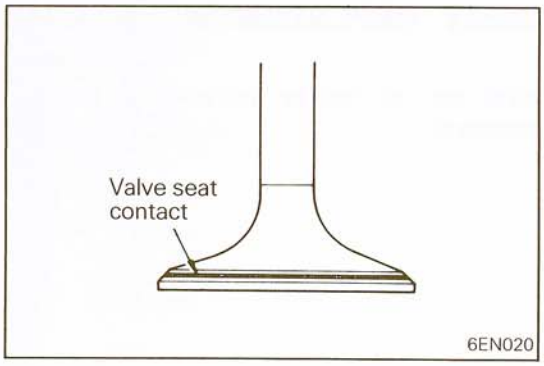

(6) Check that the seat contacts with the valve face at its center.

STB Revision

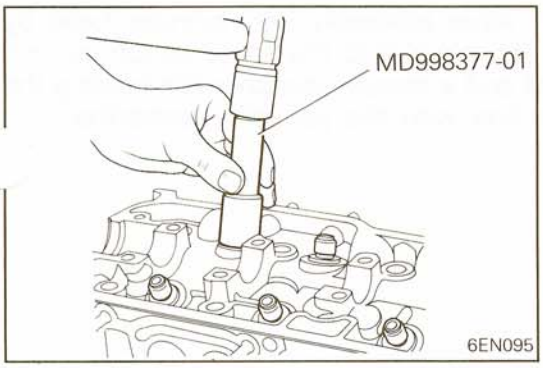

SERVICE POINTS OF REASSEMBLY N09PKCA

15. 7. INSTALLATION OF VALVE STEM SEAL / 13. 5. VALVE SPRING SEAT

Install the spring seat, then using the special tool, install the stem seal by lightly tapping the tool. Seal is installed in specified position.

Caution

1. **Incorrect installation of the seal without using the special tool will result in poor sealing and cause oil leakage down valve guide.**
2. **Do not reuse stem seal.**

14. INSTALLATION OF EXHAUST VALVE / 6. INTAKE VALVE

Apply engine oil to each valve. Insert valves into the valve guides. Avoid inserting the valve into the seal with force. After insertion, check to see if the valve moves smoothly.

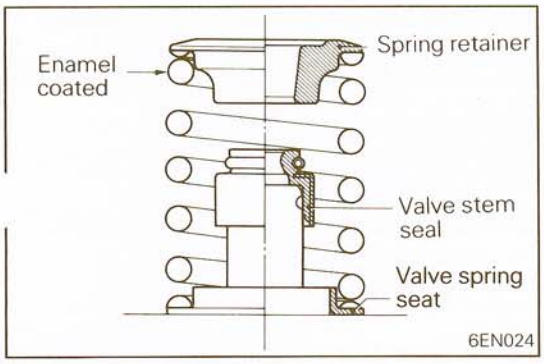

12. 4. INSTALLATION OF VALVE SPRING

Valve springs should be installed with the enamel coated side toward the valve spring retainer.

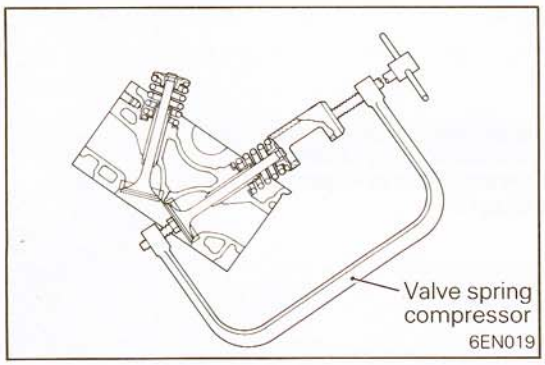

10. 2. INSTALLATION OF RETAINER LOCK

(1) Using the valve spring compressor, compress the valve spring and install the retainer lock.

Caution
When compressing the spring with the valve spring compressor, check to see that the valve stem seal is not pressed to the bottom of the retainer. Then start installing the retainer lock.

(2) Make certain that retainer locks are positively installed.

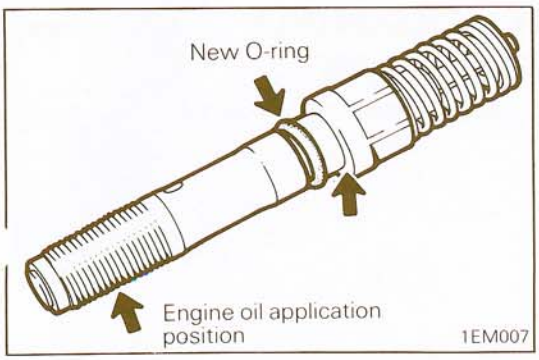

1. INSTALLATION OF JET VALVE ASSEMBLY

(1) Apply engine oil to the O-ring, jet body threads and seat surface.

Caution
Make sure that the O-ring is a new one.

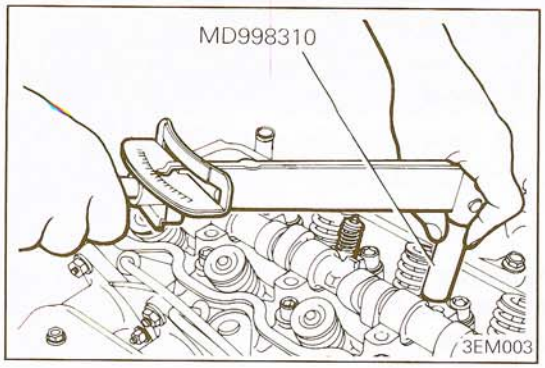

(2) Screw the jet valve assembly into cylinder head by hand. Tighten the jet valve to the specified torque with the special tool and a torque wrench while holding the special tool in line with the jet valve canterline.

JET VALVE

N09QE--

DISASSEMBLY AND REASSEMBLY

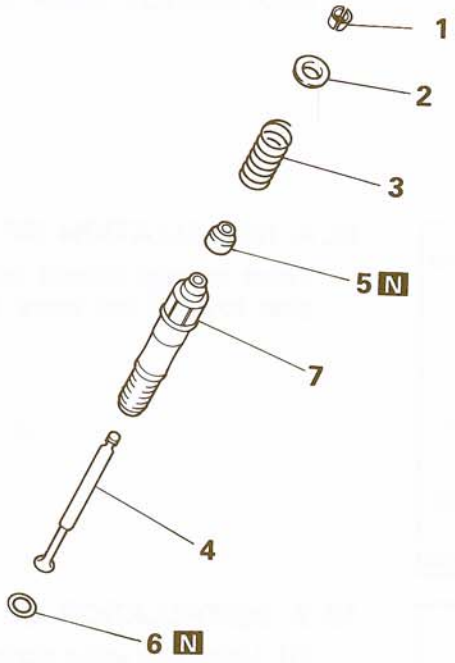

Disassembly steps

◆◆ ◆◆ 1. Retainer lock
◆◆ 2. Valve spring retainer
◆◆ 3. Valve spring
◆◆ 4. Jet valve
◆◆ 5. Stem seal
6. O-ring
7. Jet body

NOTE
(1) Reverse the disassembly procedures to reassemble.
(2) ◆◆: Refer to "Service Points of Disassembly".
(3) ◆◆: Refer to "Service Points of Reassembly".
(4) N: Non-reusable parts

1EM177

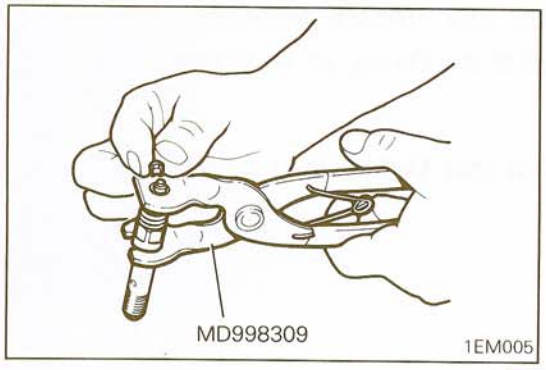

SERVICE POINT OF DISASSEMBLY

N09QFAA

1. REMOVAL OF RETAINER LOCK

Using the special tool, remove the retainer lock.

STB Revision

INSPECTION

N09QGAA

- Make sure that the jet valve slides smoothly in the jet body and has no play.

Caution
Combination of the jet valve and jet body should not be disturbed and the jet valve and jet body should be replaced as an assembly.

- Check the valve head and valve seat for damage or seizure.
- Check the spring for sag, cracks or breakage.

Standard value:

Jet valve	
Length	**91.58 mm (3.6055 in.)**
Stem O.D	**4.3 mm (0.1693 in.)**
Seat angle	**45°**
Jet valve spring	
Free height	**29.60 mm (1.1654 in.)**
Load	**34.3 N (7.7 lbs.) at installed height**
Installed height	**21.5 mm (0.8465 in.)**
Out of squareness	**1.5°**

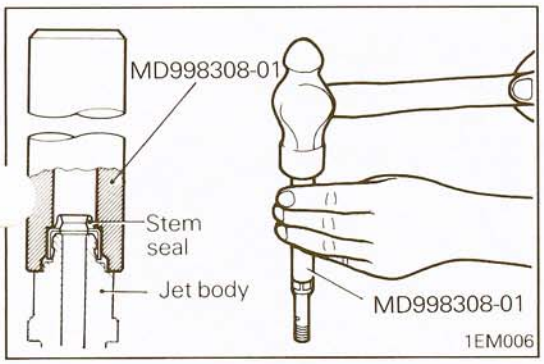

SERVICE POINTS OF REASSEMBLY

N09QHAB

5. INSTALLATION OF STEM SEAL

Using the special tool, install the stem seal.

4. INSTALLATION OF JET VALVE

(1) Apply engine oil to the stem of the jet valve.
(2) Use care to prevent damage to the new seal lips.
(3) Check to ensure that the valve slides smoothly.

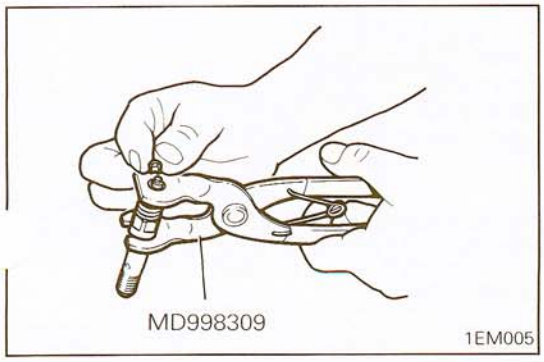

3. INSTALLATION OF VALVE SPRING / 2. VALVE SPRING RETAINER / 1. RETAINER LOCK

(1) Mount the valve spring and valve spring retainer on jet body.
(2) Compress the valve spring with the special tool, using care not to damage the valve stem by the bottom of valve spring retainer.
(3) While the spring being kept compressed, install the retainer lock.

FRONT CASE, OIL PUMP AND SILENT SHAFT

N09RA- -

REMOVAL AND INSTALLATION

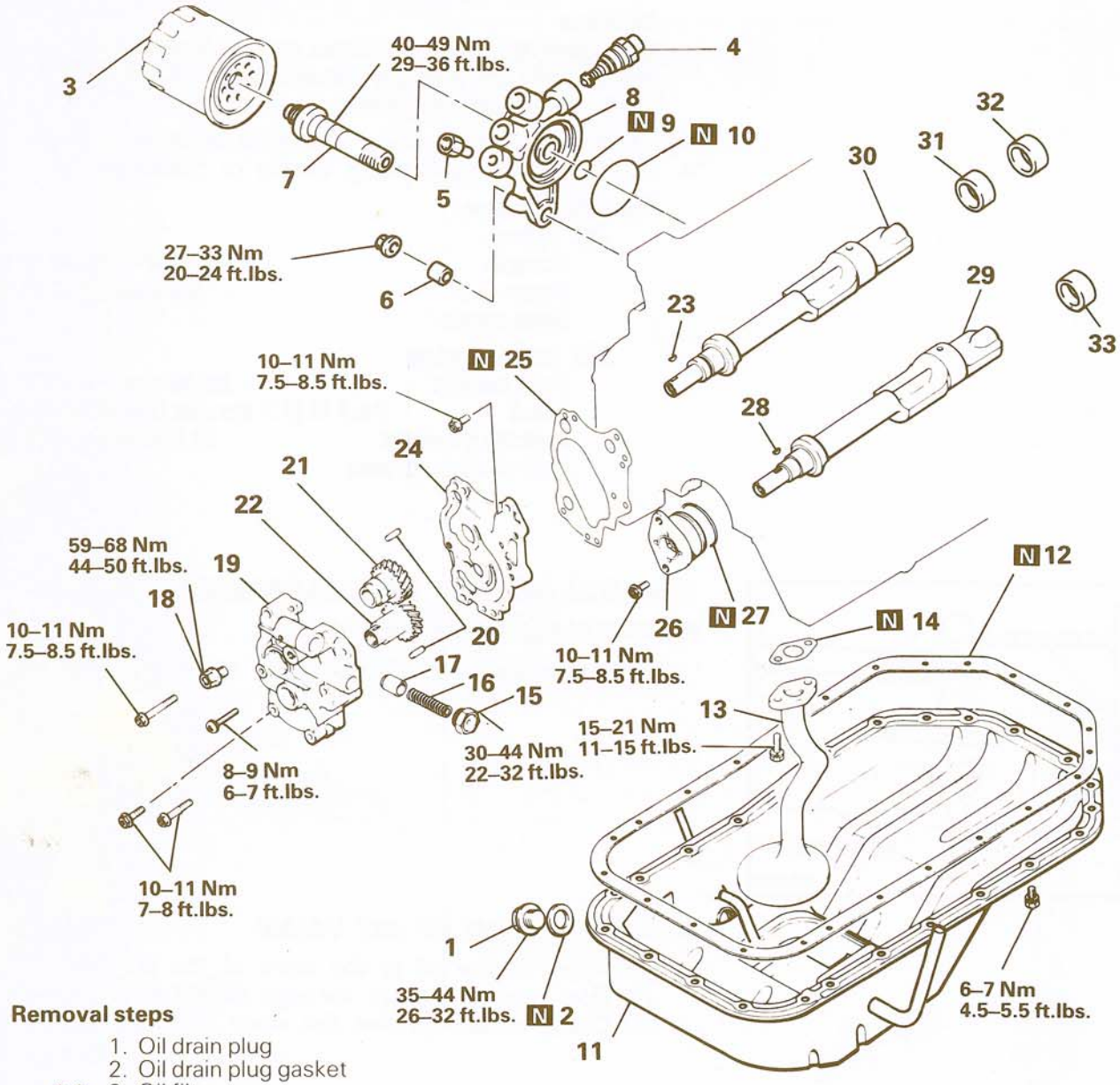

Removal steps

1. Oil drain plug
2. Oil drain plug gasket
- ◆◆ 3. Oil filter
4. Oil cooler by-pass valve
5. Oil pipe joint
6. Knock bushing
7. Oil filter bracket bolt
8. Oil filter bracket
9. O-ring
10. O-ring
- ◆◆ 11. Oil pan
12. Oil pan gasket
13. Oil screen
14. Oil screen gasket
15. Plug
16. Relief spring
17. Relief plunger
18. Flange bolt
- ◆◆ 19. Oil pump body
20. Pin
- ◆◆ 21. Driven gear
- ◆◆ 22. Drive gear
23. Woodruff key
24. Oil pump cover
25. Oil pump gasket
- ◆◆ ◆◆ 26. Thrust plate
- ◆◆ 27. O-ring
28. Woodruff key
- ◆◆ 29. Left silent shaft
30. Right silent shaft
31. Front bearing
32. Rear bearing
33. Rear bearing

NOTE
(1) Reverse the removal procedures to reinstall.
(2) ◆◆: Refer to "Service Points of Removal".
(3) ◆◆: Refer to "Service Points of Installation".
(4) N: Non-reusable parts

5EN204

STB Revision

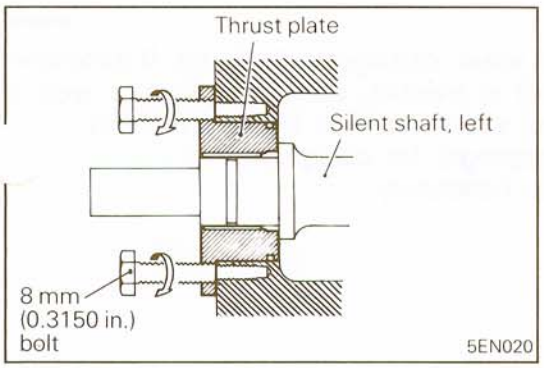

SERVICE POINT OF REMOVAL N09RBAB

26. REMOVAL OF THRUST PLATE

Install 8 mm (0.3150 in.) dia. bolts into threaded holes of flange and turn bolts in to remove the thrust plate.

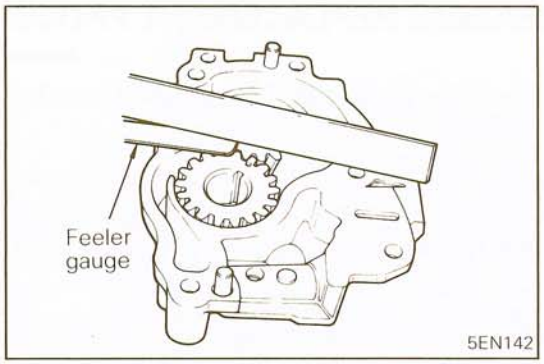

INSPECTION N09RCGB

OIL PUMP

(1) Check gear contacting surfaces of cover for step wear.
(2) Check the clearance of drive and driven gears. If clearance is excessive, replace case and cover assembly or gears.

Standard value:

Driven gear	
Tip clearance	**0.11 – 0.15 mm (0.0043 – 0.0059 in.)**
Side clearance	**0.04 – 0.10 mm (0.0016 – 0.0039 in.)**
Drive gear	
Tip clearance	**0.11 – 0.15 mm (0.0043 – 0.0059 in.)**
Side clearance	**0.05 – 0.11 mm (0.0020 – 0.0043 in.)**

Limit:

Driven gear	
Tip clearance	**0.2 mm (0.0079 in.)**
Side clearance	**0.15 mm (0.0060 in.)**
Drive gear	
Tip clearance	**0.2 mm (0.0079 in.)**
Side clearance	**0.15 mm (0.0060 in.)**

RELIEF PLUNGER AND SPRING N09RCHA

(1) Insert the relief plunger in the front case and check to see if it operates smoothly.
(2) Check the relief spring for breakage or sagging.

Standard value:

Relief spring	
Free length	**46.6 mm (1.8346 in.)**
Load	**60 N/40.1 mm (13.4 lbs./1.5787 in.)**

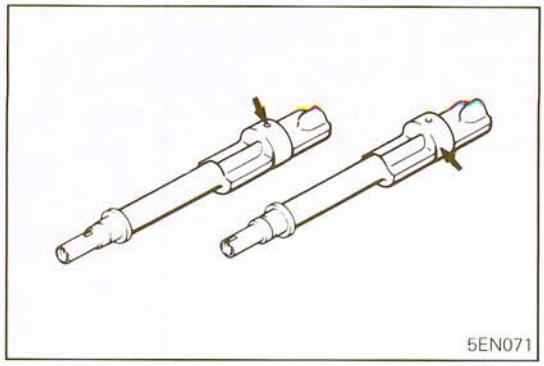
5EN071

SILENT SHAFT

N09RCIA

(1) Check journals for wear, damage and seizure. If excessive damage or seizure is evident, check bearing as well. If necessary, replace silent shaft or bearing or both.
(2) Check oil hole (passage) for clogging.
Clean or repair as necessary.

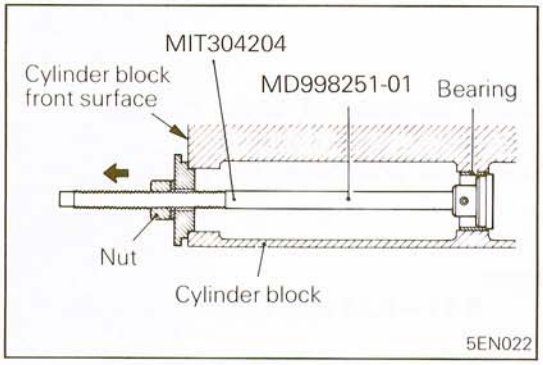

5EN022

SILENT SHAFT BEARING REPLACEMENT PROCEDURE

N09REAA

(1) Using the special tool, remove silent shaft rear bearing.

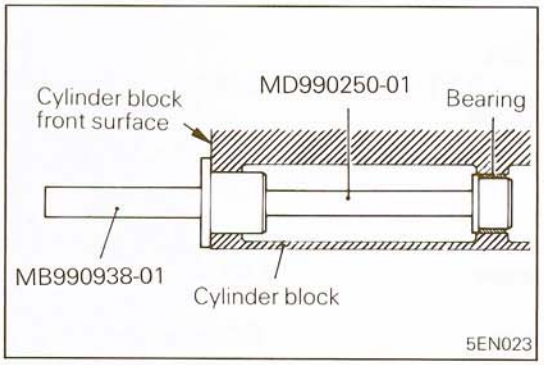

5EN023

(2) Apply engine oil to O.D. of bearing. Using the special tool, install silent shaft bearing to cylinder block.

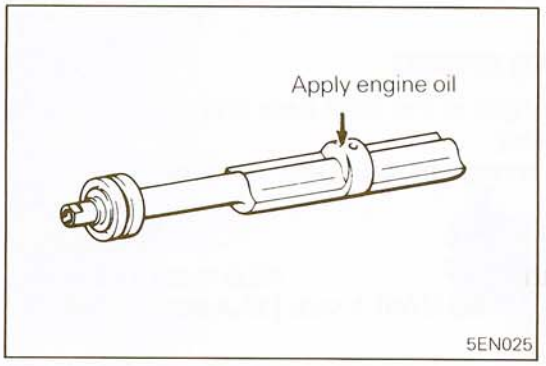

5EN025

SERVICE POINTS OF INSTALLATION

N09RDCA

29. INSTALLATION OF LEFT SILENT SHAFT

(1) Apply engine oil to journal of left silent shaft.
(2) Insert left silent shaft into cylinder block. Insert silent shaft carefully to prevent damage to the bearing.

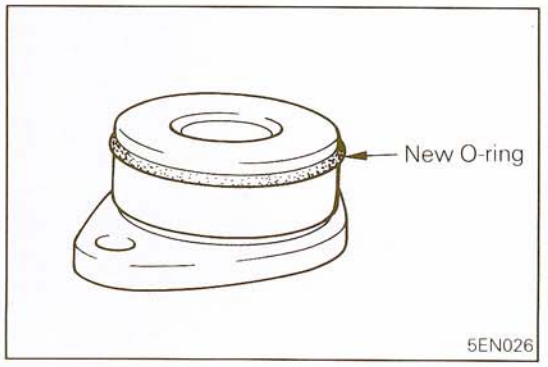

5EN026

27. INSTALLATION OF O-RING

(1) Install O-ring in groove of thrust plate.
(2) Apply engine oil around O-ring.

STB Revision

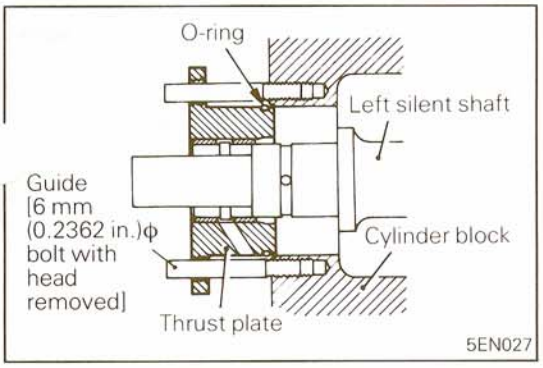

26. INSTALLATION OF THRUST PLATE

(1) Install two guides in threaded holes for mounting thrust plate. Guides should be fabricated by cutting off hexagon heads of bolts 6 mm (0.2362 in.) in diameter and 50 mm (1.9685 in.) long.
(2) Install thrust plate into cylinder block along guides. Without use of guide, threaded holes will be hard to align.

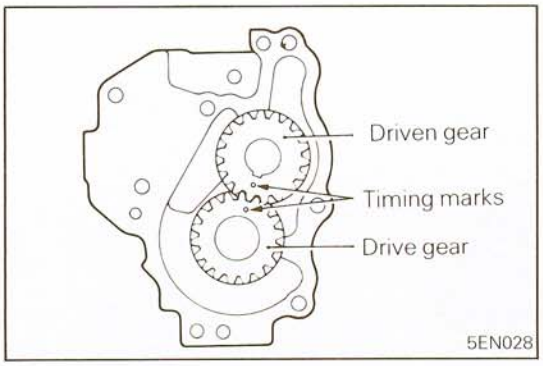

22. INSTALLATION OF DRIVE GEAR / 21. DRIVEN GEAR

Install oil pump gears to oil pump body and align timing marks.

Caution
If timing marks are out of alignment, phase of silent shaft will change and vibration will result.

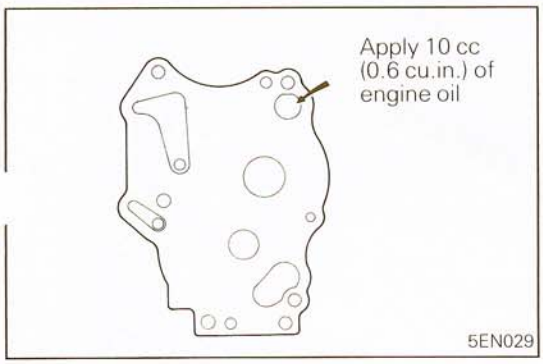

19. INSTALLATION OF OIL PUMP BODY

Place pump assembly in the same position as it was installed on engine and put approx. 10 cc (0.6 cu. in.) of clean engine oil in delivery port.

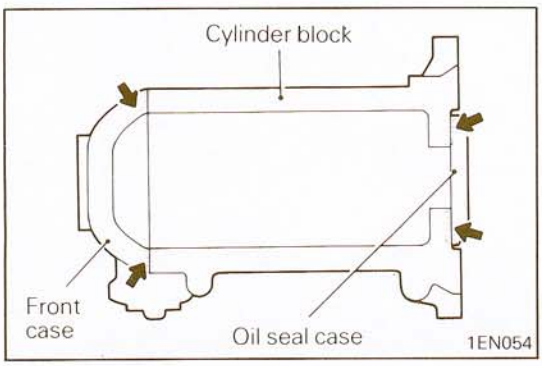

11. APPLICATION OF SEALANT TO OIL PAN

Apply sealant to the cylinder block at four positions which corresponds to the hatched area of the oil pan in the illustration.

Specified sealant: 3M ART Part No. 8660 or equivalent

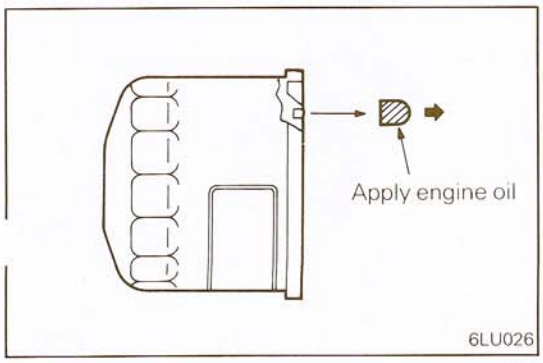

3. APPLICATION OF ENGINE OIL TO OIL FILTER

Apply thin coat of engine oil to the packing surface.

PISTON AND CONNECTING ROD

N09TA- -

REMOVAL AND INSTALLATION

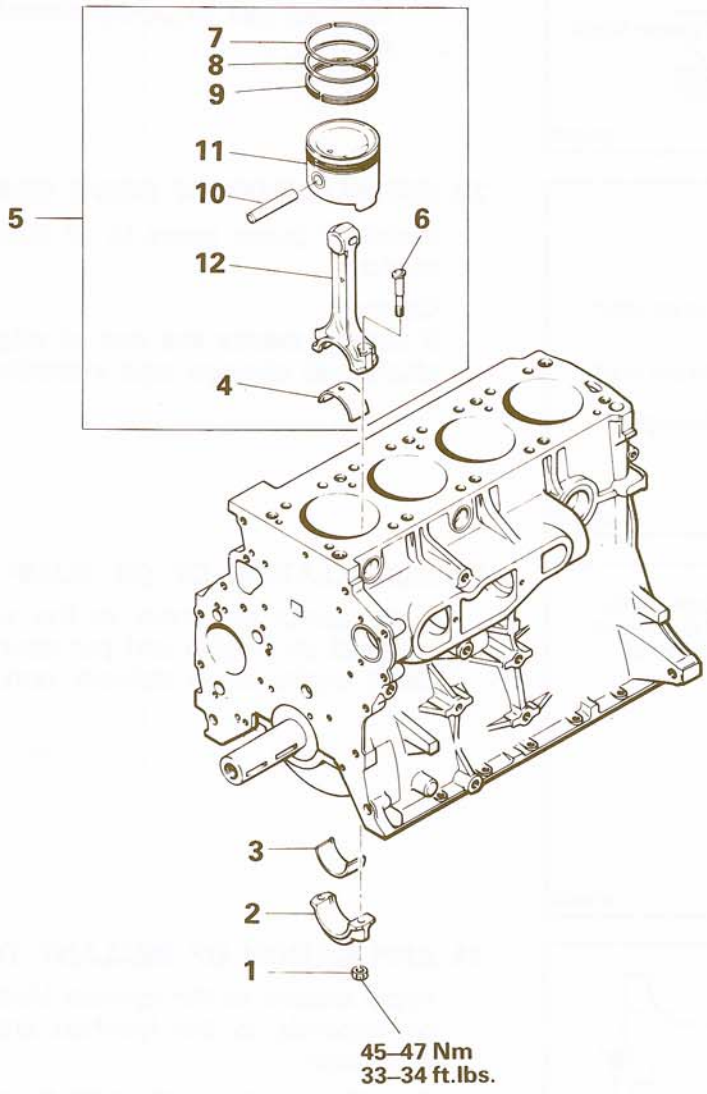

Removal steps

- 1. Nut
- ◆◆ ◆◆ 2. Connecting rod cap
- 3. Bearing
- 4. Bearing
- ◆◆ 5. Piston and connecting rod assembly
- 6. Bolt
- ◆◆ ◆◆ 7. No. 1 piston ring
- ◆◆ ◆◆ 8. No. 2 piston ring
- ◆◆ 9. Oil ring
- ◆◆ ◆◆ 10. Piston pin
- 11. Piston
- 12. Connecting rod

NOTE
(1) Reverse the removal procedures to reinstall.
(2) ◆◆: Refer to "Service Points of Removal".
(3) ◆◆: Refer to "Service Points of Installation".

5EN030

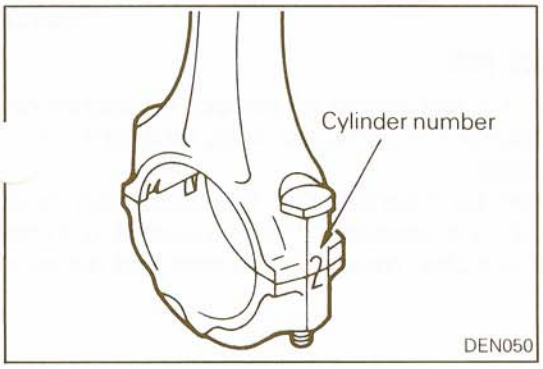

SERVICE POINTS OF REMOVAL

N09TBCB

2. REMOVAL OF CONNECTING ROD CAP

Before removing the bearing cap, stamp cylinder number on connecting rod big end for reassembly.

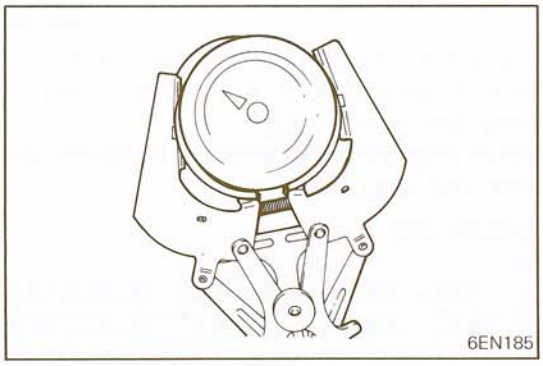

7. REMOVAL OF NO.1 PISTON RING / 8. NO.2 PISTON

Remove the piston rings with a piston ring expander.

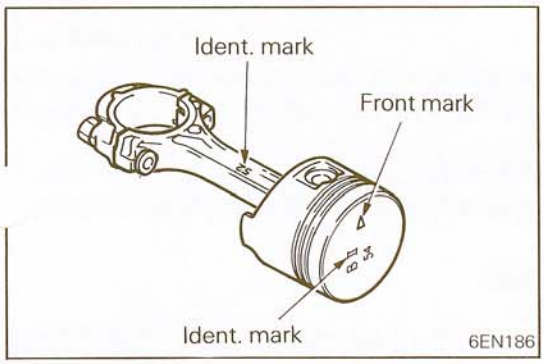

10. REMOVAL OF PISTON PIN

(1) Set piston and connecting rod assembly in tool body in such a way that front mark (arrow mark of piston or identification mark of connecting rod) will be faced upward.
(2) Press plates must be used to provide adequate support to the base during pressing operations.

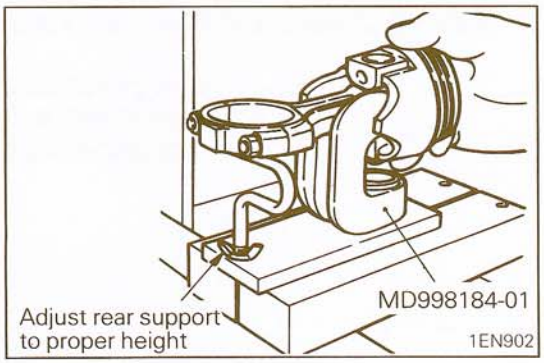

(3) Place piston and connecting rod with arrow mark or identification mark upward over anvil so lip of insert in between connecting rod boss and inside surface of piston.
The connecting rod boss should bear on as much of the insert surface as possible.
(4) Adjust connecting rod rear support until rod is horizontal to press bed surface. Misalignment of pin and receiving tube may result if support adjustment is not correct.

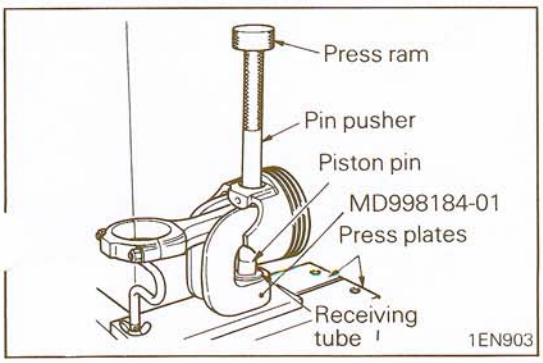

(5) Position piston pin pusher onto pin and remove pin with press ram.

Caution
As piston pin is removed, it must pass through receiving tube. Check alignment and adjust if necessary.

STB Revision

INSPECTION

N09TCAA

PISTON AND PISTON PIN

(1) Replace the piston if it has marks of streaks or seizure on the outside, thrust surface in particular. Also replace if it h cracks on the outside.
(2) If the piston pin can be inserted into the piston pin hole snugly with a thumb, it is reusable. If it is inserted with no resistance or there is a play, replace the piston and pin as a set.

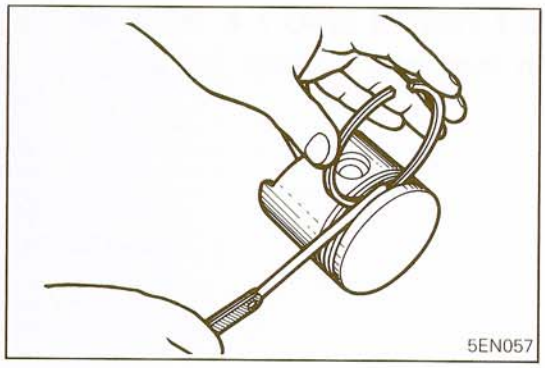
5EN057

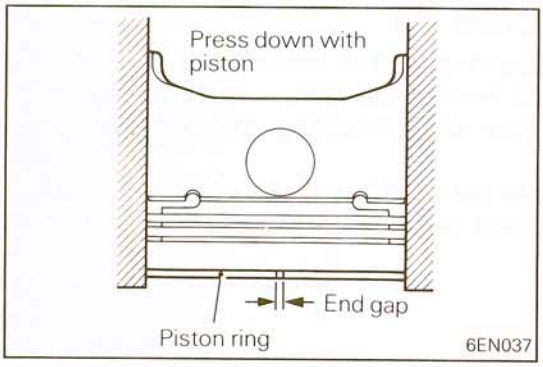

PISTON RING

N09TCBB

(1) Check the piston ring for damage, abnormal wear and breakage and replace if defective. If the piston itself is replaced, also replace the piston ring.
(2) Check the piston ring to ring groove clearance. If it exceeds the limit, replace the ring and/or piston.

Piston ring side clearance:

Standard value	
No. 1	**0.05 – 0.09 mm (0.0020 – 0.0035 in.)**
No. 2	**0.02 – 0.06 mm (0.0008 – 0.0024 in.)**
Limit	
No. 1	**0.12 mm (0.005 in.)**
No. 2	**0.1 mm (0.004 in.)**

(3) Insert a piston ring into cylinder bore. Correctly position the ring at right angles to the cylinder wall by gently pressing it down with a piston.
Draw the piston up and out, then measure the gap with a feeler gauge. If the gap exceeds the limit, replace the piston ring.

Piston ring end gap:

Standard value	
No. 1	**0.30 – 0.45 mm (0.0118 – 0.0177 in.)**
No. 2	**0.25 – 0.40 mm (0.0098 – 0.0158 in.)**
Oil ring	**0.30 – 0.45 mm (0.0118 – 0.0177 in.)**
Limit	
No. 1	**0.8 mm (0.031 in.)**
No. 2	**0.8 mm (0.031 in.)**
Oil ring	**1.0 mm (0.039 in.)**

BEARING

N09TCDA

(1) Visually check the bearing surface and replace the bearing if there is uneven contact, streak, scratch or burn. If there is heavy streak or burn, also check the crankshaft. Replace the crankshaft or machine it to an undersize if damaged.
(2) Measure the connecting rod bearing I.D. and crankshaft pin O.D. and if the clearance exceeds the limit, replace the bearing and, if necessary, also replace the crankshaft. Or machine the crankshaft to an undersize and replace the bearing with an undersized one.

Standard value: 0.02 – 0.05 mm (0.0008 – 0.0020 in.)
Limit: 0.1 mm (0.004 in.)

NOTE
Refer to CRANKSHAFT for measurement of oil clearance with plastic-gauge.

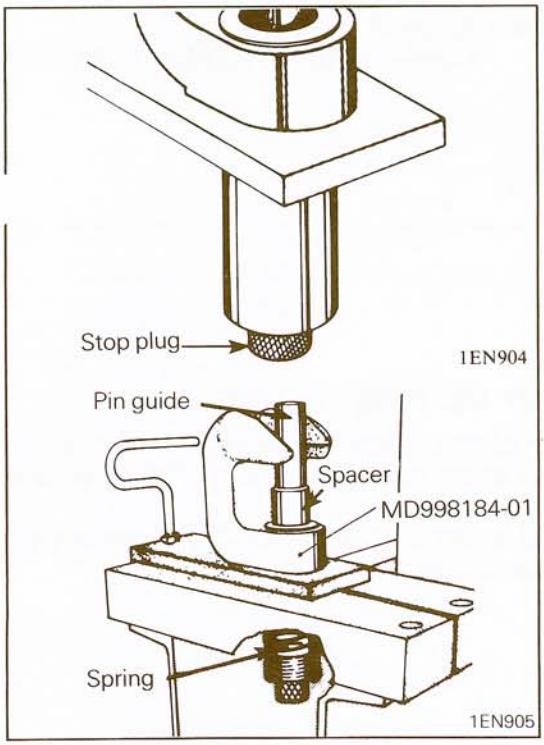

SERVICE POINTS OF INSTALLATION

N09TDAD

10. INSTALLATION OF PISTON PIN

(1) Thread stop plug approximately half way into the bottom of the receiving tube.
(2) Select the largest diameter piston pin guide that will pass through piston and rod. Install spring, spacer, and guide into receiving tube.

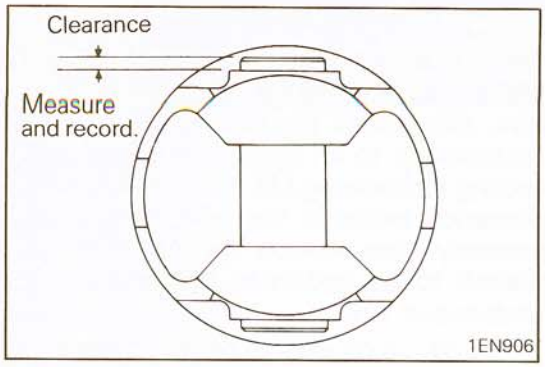

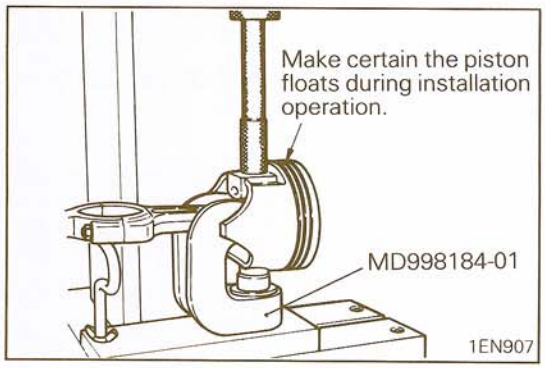

(3) With connecting rod removed from piston, insert piston pin into piston bore. Carefully measure amount of pin that protrudes equally from both sides of piston. Record this measurement for future use.
(4) Position connecting rod and piston over the anvil. Th spring loaded piston guide will pass through piston and rod and align it. Lubricate pin and insert it into piston.
(5) Place piston pin pusher on piston pin and push pin through connecting rod until the pin protrudes some distance measured and recorded above in step 3.

Caution
The piston must be free to float during installation; check frequently.

(6) Apply hydraulic pressure to pin and adjust stop plug until stop plug comes in contact with spacer.
(7) Remove piston and pin assembly from anvil and check piston pin to make sure it is centered. If it is not centered, adjust stop plug up or down to obtain proper centering.
The pin stop is now set for any remaining pistons.

Caution
If the required installation load is out of specification, replace piston pin and/or connecting rod.

Piston pin press in load:
7,350 – 17,150 N (1,650 – 3,860 lbs.)

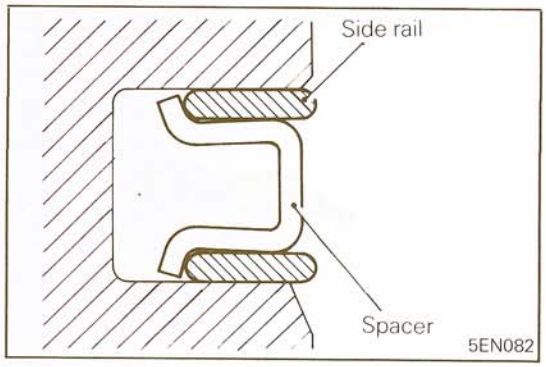

9. INSTALLATION OF OIL RING

(1) First, install the oil ring spacer in the piston ring groove. Next, install the upper side rail and then the lower side rail.
Both upper and lower side rails may be installed with their either side facing up.

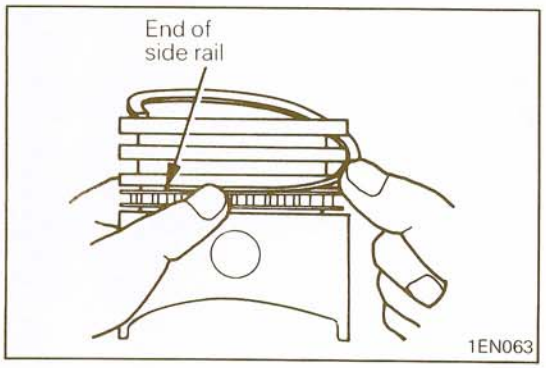

(2) To install the side rail, first place one end in the gap between the groove and the spacer.
While holding the end firmly, press the portion to be inserted with finger as illustrated until the side rail is in position.

Caution
Do not use piston ring expander to install the side rail.

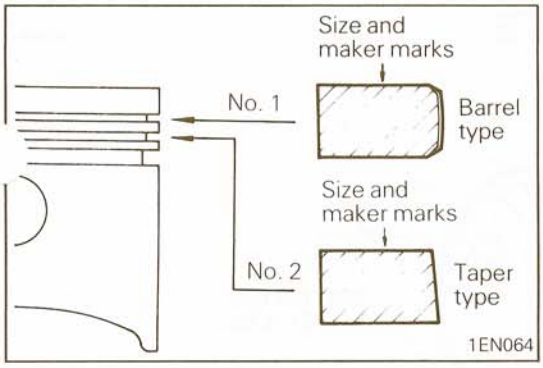

8. INSTALLATION OF NO. 2 PISTON RING / 7. NO. 1 PISTON RING

Using a piston ring expander, install No. 2 and No. 1 piston ring.

Caution

1. **The No. 1 and No. 2 piston rings have a different cross section. Be sure to install them in correct positions.**
2. **Install the No. 1 and No. 2 piston rings with the size mark and maker mark on ring surface toward the piston top.**

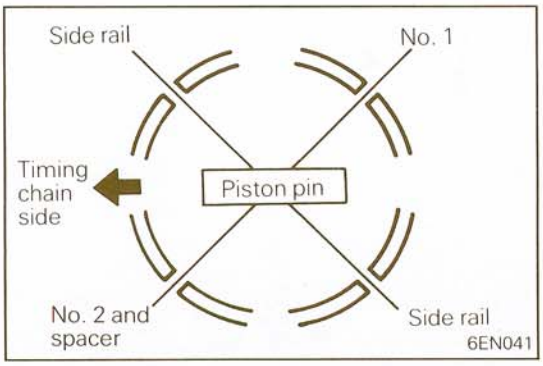

5. INSTALLATION OF PISTON AND CONNECTING ROD ASSEMBLY

(1) Apply engine oil amply to the piston outside, piston rings and oil ring.
(2) Position the gaps of the piston rings and oil ring (side rails, spacer) as illustrated.

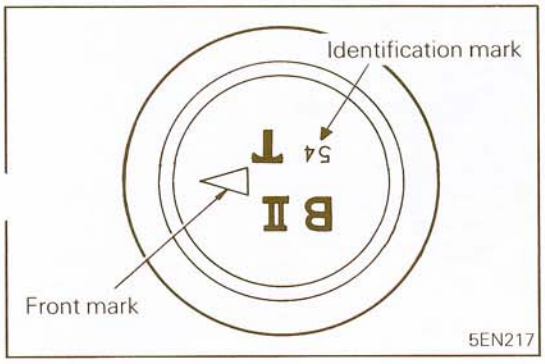

(3) Insert the piston and connecting rod assembly from the cylinder top with the front marks on piston top and connecting rod facing the timing belt side of engine.

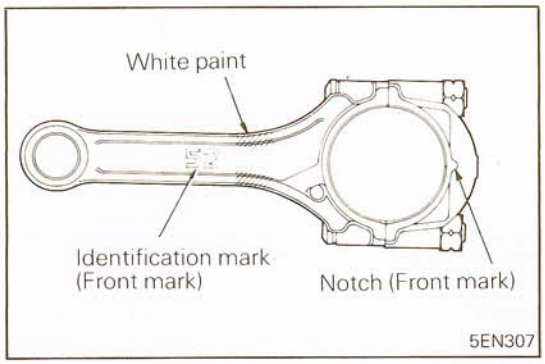

2. INSTALLATION OF CONNECTING ROD CAP

When new connecting rod is installed, make sure that identification mark and notch are on same side.

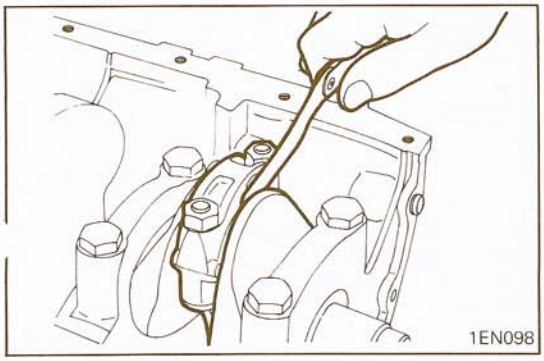

Check the connecting rod big end side clearance.

Standard value: 0.1 – 0.25 mm (0.0039 – 0.0098 in.)
Limit: 0.4 mm (0.0158 in.)

CRANKSHAFT, FLYWHEEL AND DRIVE PLATE

N09UA- -

REMOVAL AND INSTALLATION

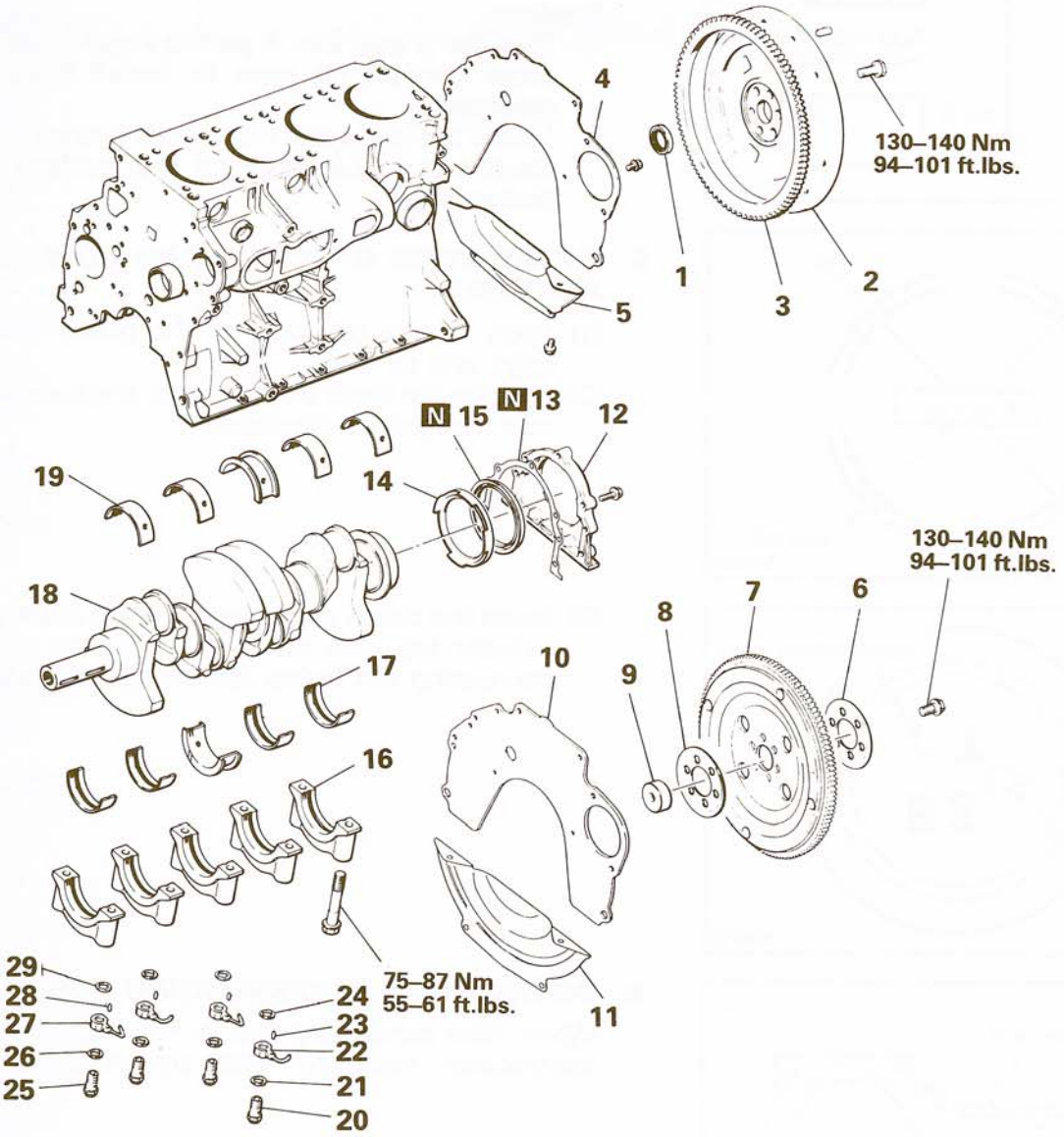

Removal steps

1. Ball bearing
2. Flywheel
3. Ring gear
4. Rear plate
5. Bell housing cover
6. Adapter plate
7. Drive plate
8. Adapter plate
9. Crank shaft bushing
10. Rear plate
11. Bell housing cover
12. Oil seal case
13. Oil seal case gasket
- ◆◆ 14. Oil separator
- ◆◆ 15. Oil seal
- ◆◆ 16. Bearing cap
- ◆◆ 17. Lower cap bearing
18. Crank shaft
- ◆◆ 19. Upper bearing
20. Check valve
21. Gasket
22. Oil jet
23. Spring pin
24. Gasket
25. Check valve
26. Gasket
27. Oil jet
28. Spring pin
29. Gasket

NOTE
(1) Reverse the removal procedures to reinstall.
(2) ◆◆: Refer to "Service Points of Removal".
(3) ◆◆: Refer to "Service Points of Installation".
(4) N: Non-reusable parts

5EN218

STB Revision

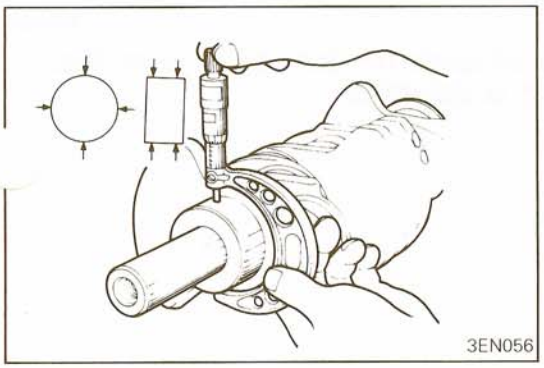
3EN056

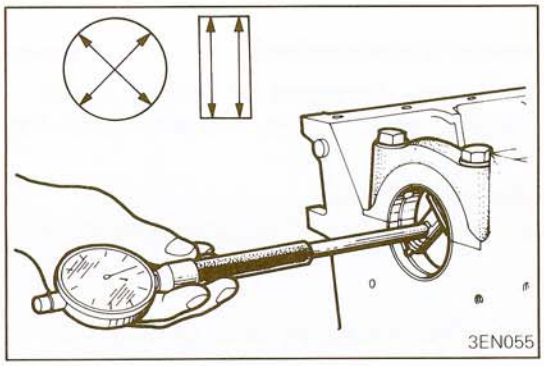
3EN055

INSPECTION N09UCAA

CRANKSHAFT

(1) Check the crankshaft journals and pins for damage, uneven wear and cracks. Also check oil holes for clogging. Correct or replace any defective part.
(2) Inspect out-of-roundness and taper of crankshaft journal and pin.

Standard value:

Crankshaft journal O.D.	**60 mm (2.3622 in.)**
Crank pin O.D.	**53 mm (2.0866 in.)**
Out-of-roundness of journal and pin	**Max. 0.01 mm (0.0004 in.)**
Taper of journal and pin	**Max. 0.01 mm (0.0004 in.)**

MAIN BEARINGS AND CONNECTING ROD BEARINGS N09UCBA

Visually inspect each bearing for peeling, melt, seizure and improper contact. Replace the defective bearings.

OIL CLEARANCE MEASUREMENT N09UCCB

To check the oil clearance, measure the outside diameter of the crankshaft journal and the crank pin and the inside diameter of the bearing. The clearance can be obtained by calculating the difference between the measured outside and inside diameters.

Oil clearance:

Crankshaft main bearing	**0.02 – 0.05 mm (0.0008 – 0.0020 in.)**
Connecting rod bearing	**0.02 – 0.05 mm (0.0008 – 0.0020 in.)**

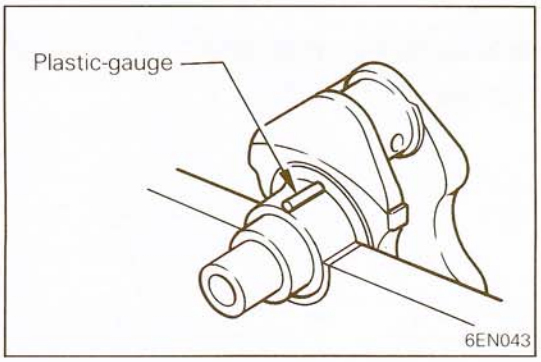

6EN043

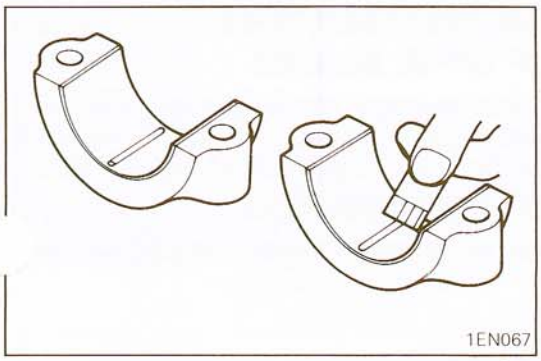
1EN067

Plastic-gauge may be used to measure the clearance.
(1) Remove oil and grease and any other dirt from bearings and journals.
(2) Cut plastic-gauge to the same length as the width of the bearing and place it in parallel with the journal, off oil holes.
(3) Install the crankshaft, bearings and caps and tighten them to the specified torques. During this operation, do NOT turn the crankshaft.
(4) Remove the caps. Measure the width of the plastic-gauge at the widest part by using a scale printed on the plastic-gauge sleeve.
(5) If the clearance exceeds the repair limit, the bearing should be replaced or an undersize bearing used.
When installing a new crankshaft, be sure to use standard size bearings.
(6) Should the standard clearance not be obtained even after bearing replacement, the journal should be ground to undersize and a bearing of the same size should be installed.

OIL SEAL
N09UCDA

Check front and rear oil seals for damage or worn lips. Replace any seat that is defective.

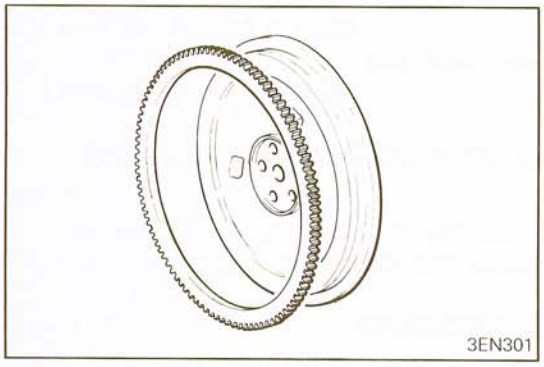
3EN301

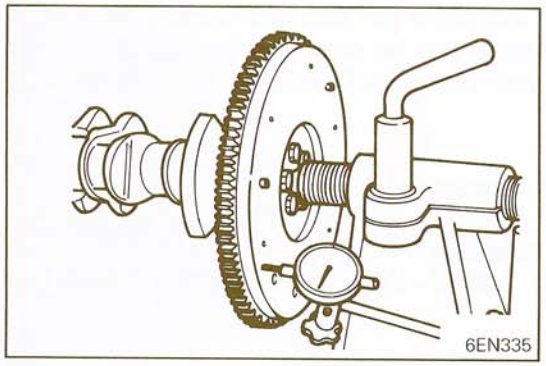
6EN335

RING GEAR
(for vehicles with a manual transmission)
N09UCEA

Check the ring gear for worn, damaged or broken teeth. Replace the ring gear if teeth are defective, and also check the starter motor pinion.

Ring Gear Replacement Procedure

(1) Strike outer circumference of ring gear at several points and remove the gear.

Caution
The ring gear cannot be removed if it is heated.

(2) Install the ring gear on flywheel after heating the ring gear to 260 – 280°C (500 – 536°F) for shrink fit.

FLYWHEEL
(for vehicles with a manual transmission)
N09UCFA

(1) Visually check the clutch disc friction surface of flywheel for ridge wear, streaks and seizure.
Replace as necessary.

(2) If the flywheel runout exceeds the limit, replace it.

Limit: 0.13 mm (0.0051 in.)

DRIVE PLATE
(for vehicles with an automatic transmission)
N09UCGA

Replace if deformed, damaged or cracked.

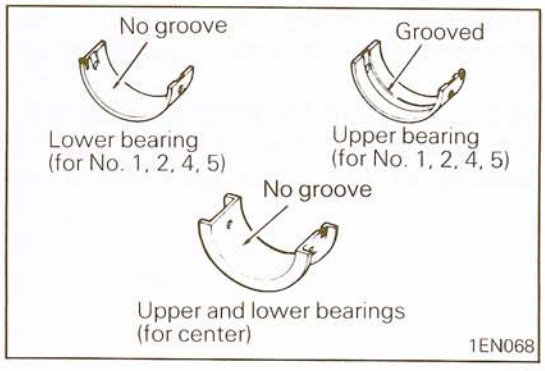

SERVICE POINTS OF INSTALLATION
N09UDAB

19. INSTALLATION OF UPPER BEARING

When reusing the main bearings, remember to install them by referring to location marks made at the time of removal. Be sure oil holes in bearings align with oil hole in block.

17. INSTALLATION OF LOWER BEARING

Install bearings without grooves (lower bearing) on ma. bearing cap side.

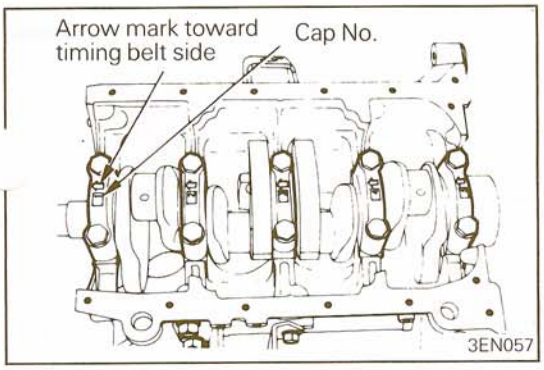

16. INSTALLATION OF BEARING CAP

(1) The caps should be installed with the arrow mark directed toward the crank pulley side of engine. Cap numbers must be in correct order.
(2) Tighten cap bolts in sequence: center, No. 2, No. 4, front and rear cap bolts.
(3) Cap bolts should be tightened evenly in 2 to 3 stages before they are finally tightened.
(4) Make certain that the crankshaft turns freely and has the proper clearance between the center main bearing thrust flange and the connecting rod big end bearing.

Crankshaft end play:
Standard value 0.05 – 0.18 mm (0.0020 – 0.0071 in.)
Limit 0.4 mm (0.016 in.)

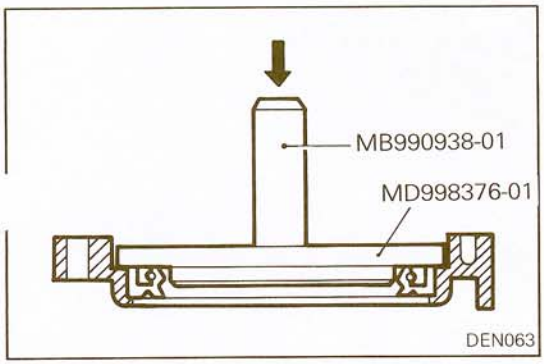

15. INSTALLATION OF OIL SEAL

Using the special tool, press fit the oil seal all the way in without tilting it.

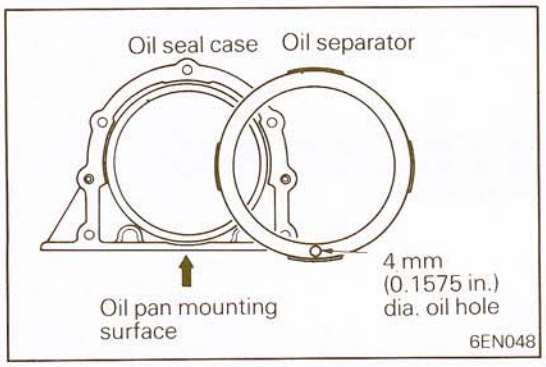

14. INSTALLATION OF OIL SEPARATOR

Force the oil separator into the oil seal case, making sure that the oil hole in the separator is positioned at the bottom (indicated by an arrow in the illustration).

CYLINDER BLOCK

N09VA--

REMOVAL AND INSTALLATION

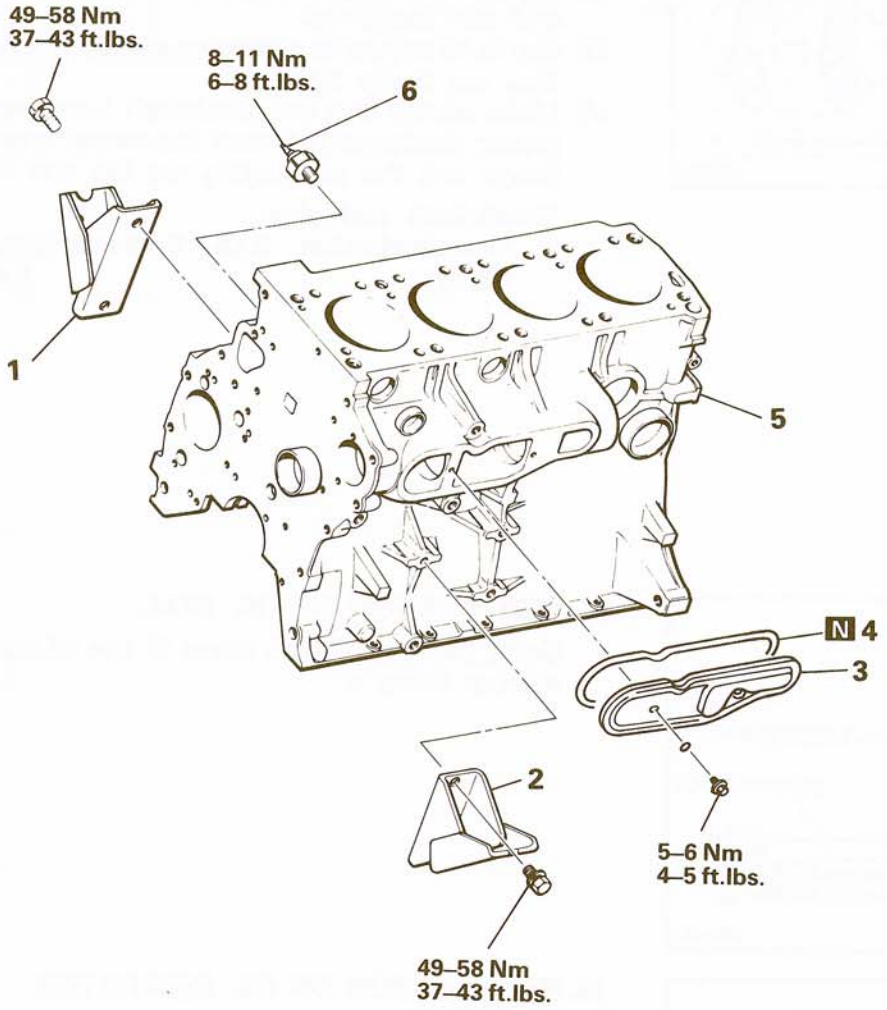

Removal steps

1. Right engine support bracket
2. Left engine support bracket
3. Silent shaft chamber cover
4. Chamber cover gasket
5. Cylinder block
- ◆◆ ◆◆ 6. Oil pressure switch

NOTE
(1) ◆◆: Refer to "Service Points of Removal".
(2) ◆◆: Refer to "Service Points of Installation".
(3) N: Non-reusable parts

5EN210

SERVICE POINT OF REMOVAL

N09VBAA

6. REMOVAL OF OIL PRESSURE SWITCH

The switch has sealant applied to its threads. Remove the switch carefully not to break it.

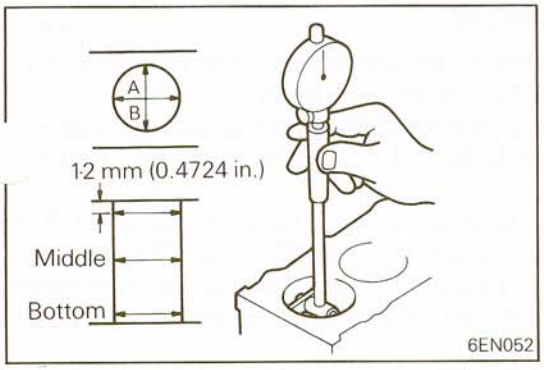

INSPECTION

- Visually check the cylinder block for scores, rust and corrosion. Also check for cracks or any other defects by using a flaw detecting agent (magnafluxing). Correct or replace the block if damaged.
- Measure the cylinder bore with a cylinder gauge at three levels in the directions of A and B. If the cylinder bores show more than specified out-of-round or taper or if the cylinder walls are badly scuffed or scored, the cylinder block should be rebored and honed, and new oversize pistons and rings fitted.

  Measuring points are as shown.

  Cylinder bore: 91.1 mm (3.5866 in.)
  Out-of-roundness and taper of cylinder bore: Max. 0.02 mm (0.0008 in.)

- If cylinder top ridge is worn in stages, cut away with ridge reamer.
- Oversize pistons are available in four sizes.

  Piston service size and mark:

0.25 mm (0.010 in.) O.S.	**0.25**
0.50 mm (0.020 in.) O.S.	**0.50**
0.75 mm (0.030 in.) O.S.	**0.75**
1.00 mm (0.039 in.) O.S.	**1.00**

- To rebore the cylinder bore to oversize, keep the specified clearance between the oversize piston and the bore, and make sure that all pistons used are of the same oversize. The standard measurement of the piston outside diameter is taken at a level 2 mm (0.0787 in.) above the bottom of the piston skirt and across the thrust faces.

  Piston-to-cylinder wall clearance: 0.02 – 0.04 mm (0.0008 – 0.0016 in.)

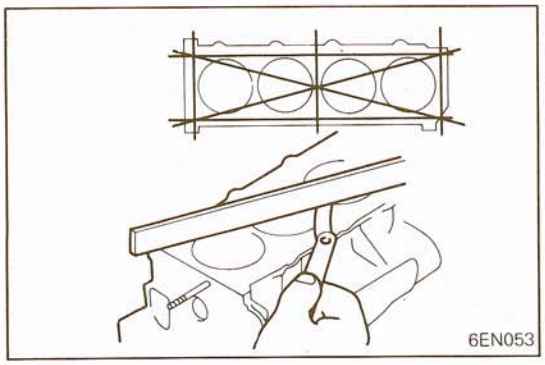

- Check for damage and cracks.
- Check top surface for flatness. If excessive flatness is evident, grind to minimum limit or replace.

Flatness of gasket surface:	
Standard value	**Max. 0.05 mm (0.0020 in.)**
Limit	**0.1 mm (0.0039 in.)**
Overall height:	
Standard value	**316 mm (12.4409 in.)**
Limit	**315.8 mm (12.4330 in.)**

Caution
If cylinder head gasket surface has already been ground, the thickness of the removed stock should be included in the grinding limit of −0.2 mm (−0.0079 in.)

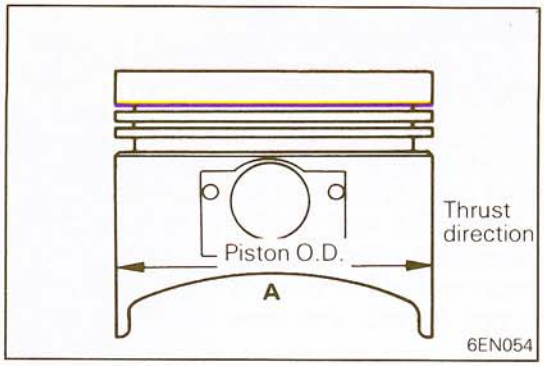

REBORING CYLINDER

N09VEAA

(1) Determine the oversize pistons to be used with reference to the cylinder with the largest bore.
(2) There are four kinds of oversized piston available; 0.25 m (0.01 in.), 0.50 mm (0.02 in.), 0.75 mm (0.03 in.), 1.00 r (0.04 in.).
Bore the cylinder to a dimension so that piston O.D. to cylinder clearance meets the specification. The standard measuring point for piston O.D. is shown in the illustration.
(3) Based on the measured piston O.D., calculate the boring dimension as follows:
Boring dimension = [Piston O.D.] + [Piston-to-cylinder clearance 0.01 to 0.03 mm (0.0004 to 0.0012 in.)] – [Honing allowance 0.02 mm (0.0008 in.)]
(4) Bore each cylinder to the calculated boring dimension.

Caution
To prevent distortion caused by temperature rise during boring, work in the order of No. 2 to No. 4 to No. 1 to No. 3 cylinders.

(5) Hone to final finish dimension.
(6) Check piston to cylinder clearance.

Standard value: 0.01 – 0.03 mm (0.0004 – 0.0012 in.)

SERVICE POINTS OF INSTALLATION

N09VDAA

6. INSTALLATION OF OIL PRESSURE SWITCH

Coat the threads of switch with sealant and install the switch.

Specified sealant: 3M ART Part No. 8660 or equivale

Caution
1. Keep the end of threaded portion clear of sealant.
2. Avoid an overtightening.

INTAKE AND EXHAUST SYSTEM

CONTENTS

EXHAUST MANIFOLD 9

EXHAUST PIPES AND MUFFLERS 15

GENERAL INFORMATION 2

INTAKE MANIFOLD 5

'NTERCOOLER 7

SPECIFICATIONS 3

- General Specifications 3
- Sealants and Adhesives 4
- Service Specifications 3
- Torque specifications 3

TURBOCHARGER 10

GENERAL INFORMATION

N11BAAE

The intake manifold is made of an aluminum casting. Engine coolant is circulated through the heat riser located at the injection mixer mounting area in order to improve atomization of air-fuel mixture. In addition, the jet air passage and EGR gas passage are provided and the thermostat housing is installed near No. 1 po
The exhaust manifold is made of an iron casting, and is so designed as to allow installation of turbocharge.
The intercooler is of an air-cooling, cross-flow type made of aluminum, and installed at the vehicle front.
The turbocharger is a TD05 model. It consists of the turbine wheel cast from iron, compressor wheel made from aluminum alloy, full-floating bearing to support the wheel shaft, casing, turbine housing, compressor housing, etc.
This turbocharger is a water-cooled type and the water jacket located at the lubricating oil inlet area provides the passage for engine coolant. (Refer to GROUP 7 COOLING.)
In addition, the waste gate valve and actuator are installed to control boost pressure.

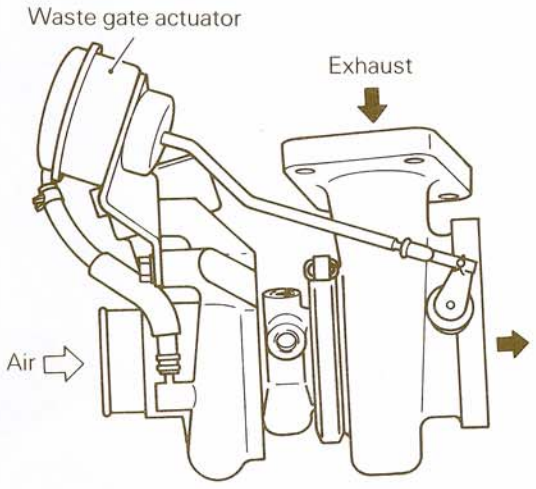

61N080

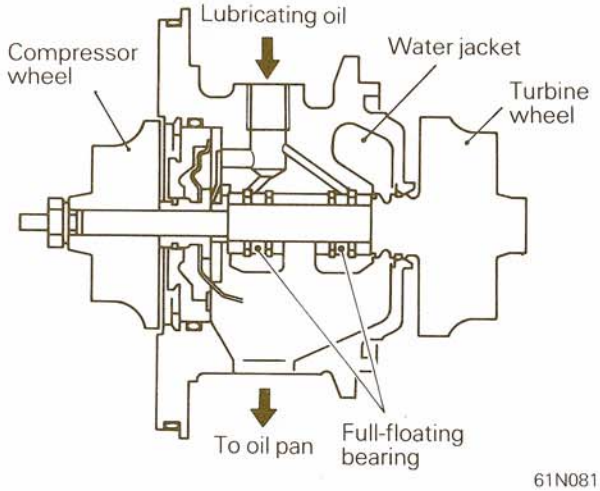

61N081

SPECIFICATIONS

N11CA--

GENERAL SPECIFICATIONS

ems	With intercooler	Without intercooler
Turbocharger		
Type	Exhaust gas turbine type	Exhaust gas turbine type
Identification No.	TD05 – 12A – 8	TC05 – 12A – 8
Supercharging pressure control	Waste gate actuator and valve	Waste gate actuator and valve
Intercooler		
Type	Air cooled type	Air cooled type
Exhaust system		
Muffler	Expansion resonance type	Expansion resonance type
Coupling	Spherical coupling	Spherical coupling
Suspension system	Rubber O-rings	Rubber O-rings

SERVICE SPECIFICATIONS

N11CB--

Description	Standard	Limit
Intake and exhaust manifolds		
Distorsion of cylinder head contacting surface mm (in.)	Less than 0.15 (0.006)	0.3 (0.012)
Turbocharger		
Waste gate valve opening pressure kPa (psi)		
Without intercooler	Approx. 57 (8.1)	
With intercooler	Approx. 68 (9.7)	

TORQUE SPECIFICATIONS

N11CC--

Items	Nm	ft.lbs.
Front engine hanger bolt	20 – 27	14 – 19
Turbocharger coupling bolt	4 – 5	2.9 – 3.6
Waste gate actuator bolt	10 – 13	7 – 9
Oil pipe joint bolt	23 – 27	17 – 19
Front catalytic converter to manifold	30 – 40	22 – 29
Center exhaust pipe to main muffler	20 – 30	14 – 21
Intercooler air hose band	3 – 5	2 – 4
Turbocharger to exhaust manifold	50 – 70	36 – 51
Catalytic conveter to turbocharger	50 – 70	36 – 51
Oil pipe flare nut	16 – 24	12 – 17
Oil return pipe to turbocharger	8 – 10	6 – 7
Heat protector to turbocharger	8 – 10	6 – 7
Heat insulator to exhaust manifold	12 – 15	9 – 11
Front catalytic converter to rear catalytic conveter	30 – 40	22 – 29
Center exhaust pipe to rear catalytic converter	40 – 60	29 – 43
Intake and exhaust manifold nuts or bolts	15 – 20	11 – 14
Air intake pipe to turbocharger bolt	10 – 12	7 – 9

STB Revision

Items	Nm	ft.lbs.
Injection mixer to manifold	15 – 20	11 – 14
Water outlet fitting	10 – 13	7 – 9
Compressor bracket bolt	20 – 30	14 – 21

SEALANTS AND ADHESIVES

N11CD- -

Items	Specified adhesive	Quantity
Threads of engine coolant temperature sensor, thermo valve and engine coolant temperature gauge unit	3M Adhesive Nut Locking 4171 or equivalent	As required

INTAKE MANIFOLD

N11MA--

REMOVAL AND INSTALLATION

Pre-removal Operation
- Draining Engine Coolant
  (Refer to GROUP 0 LUBRICATION AND MAINTENANCE – Replace of the Engine Coolant.)

Post-installation Operation
- Refilling Engine Coolant
  (Refer to GROUP 0 LUBRICATION AND MAINTENANCE – Replace of the Engine Coolant.)

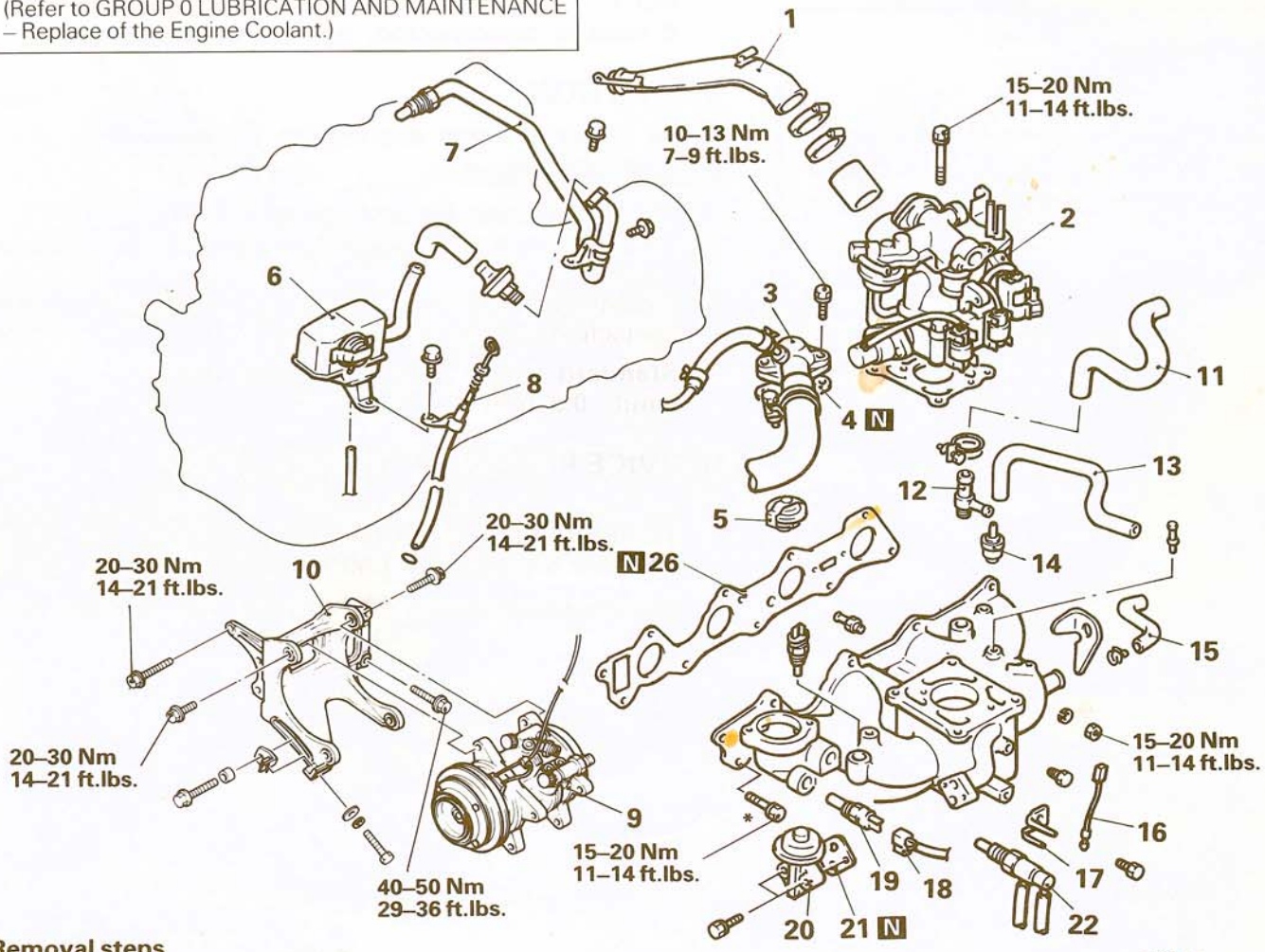

05Y650

Removal steps

1. Air intake pipe
2. ◆◆ Injection mixer assembly
3. ◆◆ Water outlet fitting
4. Gasket
5. Thermostat
6. Secondary air cleaner assembly
7. Secondary air pipe
8. Oil dipstick assembly
9. ◆◆ Compressor and clutch assembly
10. Compressor bracket
11. Heater hose
12. Joint
13. Brake booster vacuum hose
14. Water trap
15. Water hose
16. Cable assembly
17. Cable clamp
18. Connector
19. ◆◆ Engine coolant temperature gauge unit
20. EGR valve
21. Gasket
22. ◆◆ Thermo valve
23. ◆◆ Engine coolant temperature sensor
24. Hose nipple
25. Intake manifold
26. Intake manifold gasket

NOTE
(1) Reverse the removal procedures to reinstall.
(2) ◆◆: Refer to "Service Points of Removal".
(3) ◆◆: Refer to "Service Points of Installation".
(4) N: Non-reusable parts
(5) Of all intake manifold attaching parts, only this part marked with * is a bolt.

STB Revision

SERVICE POINTS OF REMOVAL N11MBAE

2. REMOVAL OF INJECTION MIXER ASSEMBLY

Refer to GROUP 14 FUEL SYSTEM.

3. REMOVAL OF WATER OUTLET FITTING

Refer to GROUP 7 COOLING.

9. REMOVAL OF COMPRESSOR AND CLUTCH ASSEMBLY

Remove the compressor and clutch assembly with the hose connected.

NOTE
If hose is disconnected, gas charge is required.

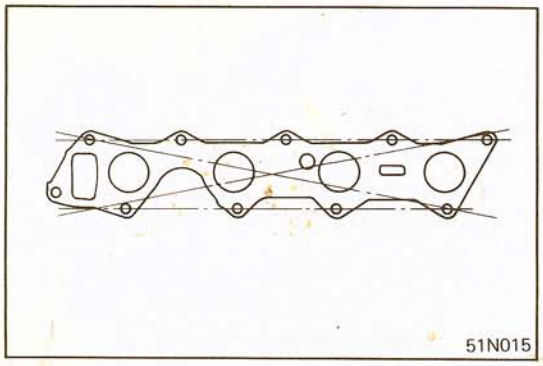
51N015

INSPECTION N11CAAB

Check following items and replace if defective.

INTAKE MANIFOLD

(1) Check each part for damage and cracks.
(2) Check vacuum port, water passage and gas passage for clogging.
(3) Use straight edge and feeler gauge to check cylinder head contacting surface for distorsion.

Standard value: 0.15 mm (0.006 in.)
Limit: 0.3 mm (0.012 in.)

SERVICE POINTS OF INSTALLATION N11MDAD

23. APPLICATION OF SEALANT TO ENGINE COOLANT TEMPERATURE SENSOR / 22. THERMO VALVE / 1? ENGINE COOLANT TEMPERATURE GAUGE UNIT

Specified adhesive: 3M Adhesive Nut Locking 4171 or equivalent

INTERCOOLER

N11TA- -

REMOVAL AND INSTALLATION

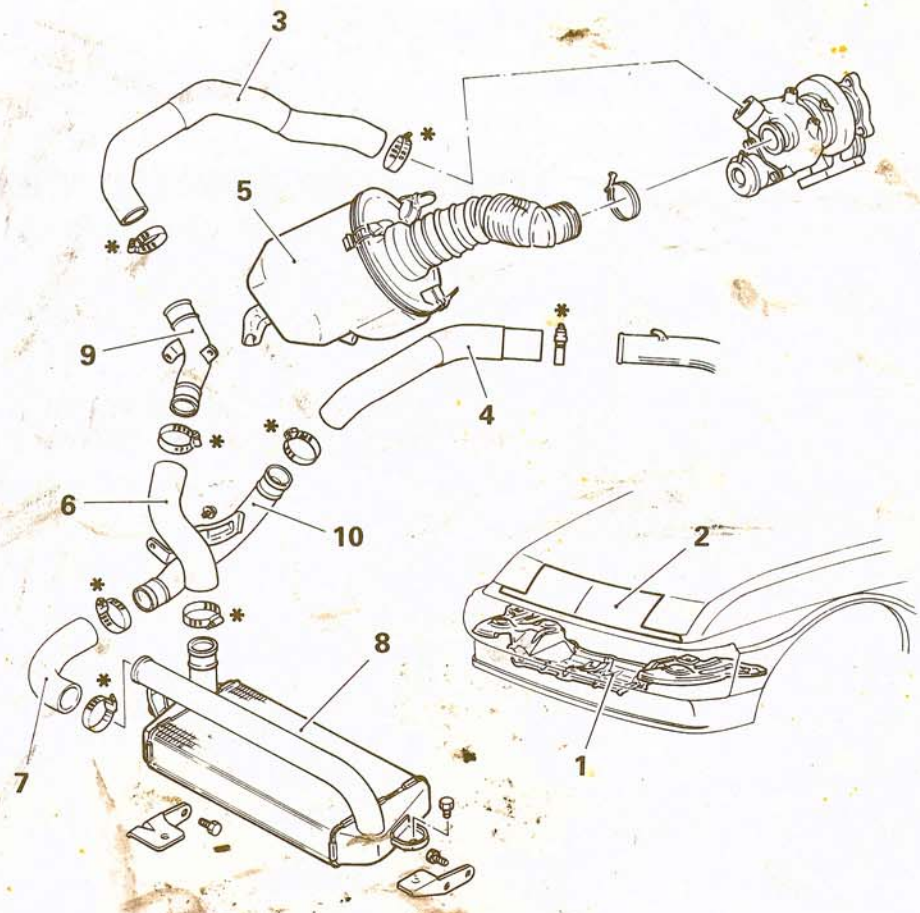

Removal steps

1. Air guide panel
2. Header panel
3. Air hose A
4. Air hose D
5. Air cleaner
6. Air hose B
7. Air hose C
◆◆ ◆◆ 8. Intercooler
9. Air pipe A
10. Air pipe B

NOTE
(1) Reverse the removal procedures to reinstall.
(2) ◆◆: Refer to "Service Points of Removal".
(3) ◆◆: Refer to "Service Points of Installation".
(4) Torque for tightening hose band marked with * is 3 – 5 Nm (2 – 4 ft.lbs.).

05Y643

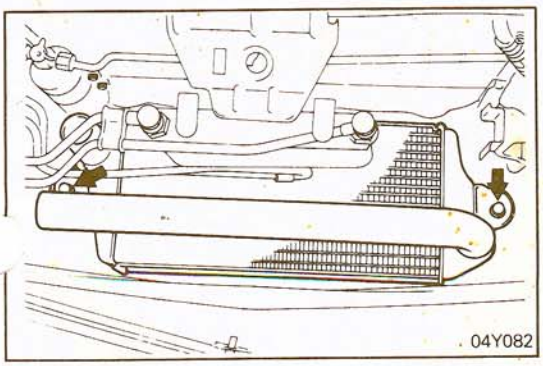

SERVICE POINT OF REMOVAL

N11TBAA

8. REMOVAL OF INTERCOOLER

Remove the intercooler bracket (right side) and the intercooler mounting bolts and remove the intercooler from below.

INSPECTION

N11TCAA

- Check the intercooler fins for bending, damage, or foreign matter.
- Check the intercooler hoses for cracking, damage, or wear

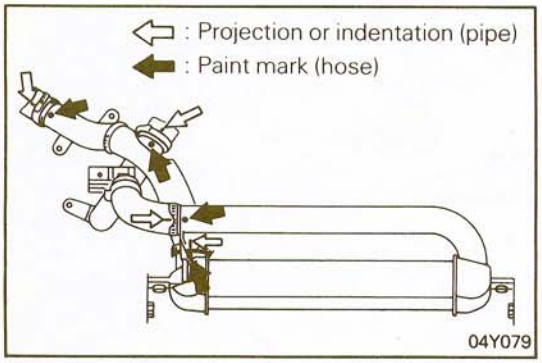

SERVICE POINT OF INSTALLATION

N11TDAA

8. INSTALLATION OF INTERCOOLER

Connect the air hoses and air pipes by aligning the paint marks on the hoses with the projections and indentations on the pipes.

Caution
Be careful not to allow any foreign matter to get into the hoses, pipes, or the intercooler itself.

EXHAUST MANIFOLD

N11NA--

REMOVAL AND INSTALLATION

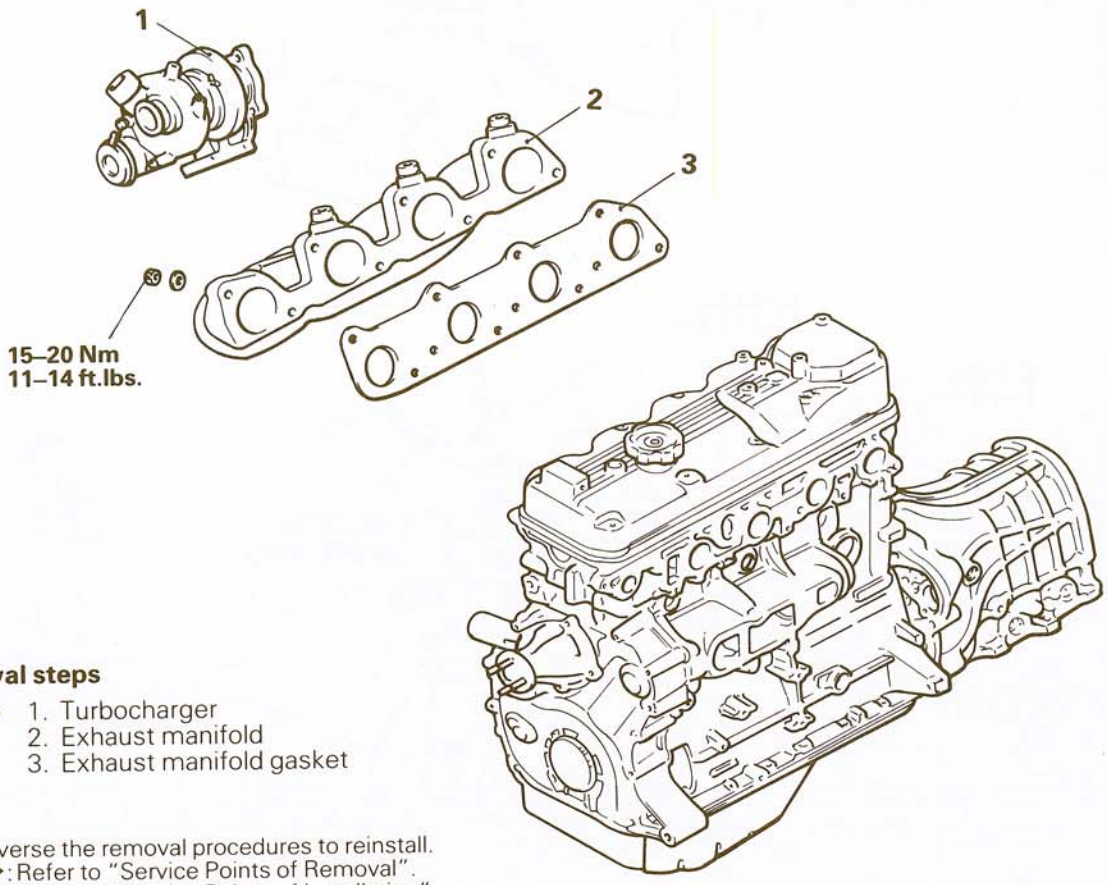

Removal steps

◆◆ ◆◆ 1. Turbocharger
2. Exhaust manifold
3. Exhaust manifold gasket

NOTE
(1) Reverse the removal procedures to reinstall.
(2) ◆◆: Refer to "Service Points of Removal".
(3) ◆◆: Refer to "Service Points of Installation"

01Y689

SERVICE POINT OF REMOVAL

N11NBAB

1. REMOVAL OF TURBOCHARGER

Refer to P.11-10.

INSPECTION

N11NCAB

Check following items and replace if defective.

EXHAUST MANIFOLD

(1) Check each part for damage and cracks.
(2) Use straight edge and feeler gauge to check cylinder head contacting surface for distorsion.

Standard value: Less than 0.15 mm (0.006 in.)
Limit: 0.3 mm (0.012 in.)

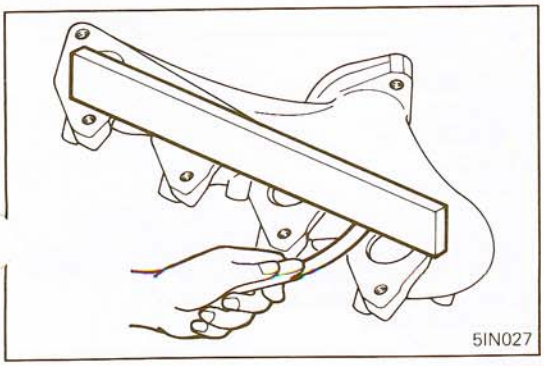
5IN027

EXHAUST MANIFOLD GASKET

Gasket may be reused if it has no peeled-off or damaged surface.

SERVICE POINT OF INSTALLATION

N11NDAC

1. INSTALLATION OF TURBOCHARGER

Refer to P.11-10.

TURBOCHARGER

N11LA- -

REMOVAL AND INSTALLATION

Vehicles with an intercooler

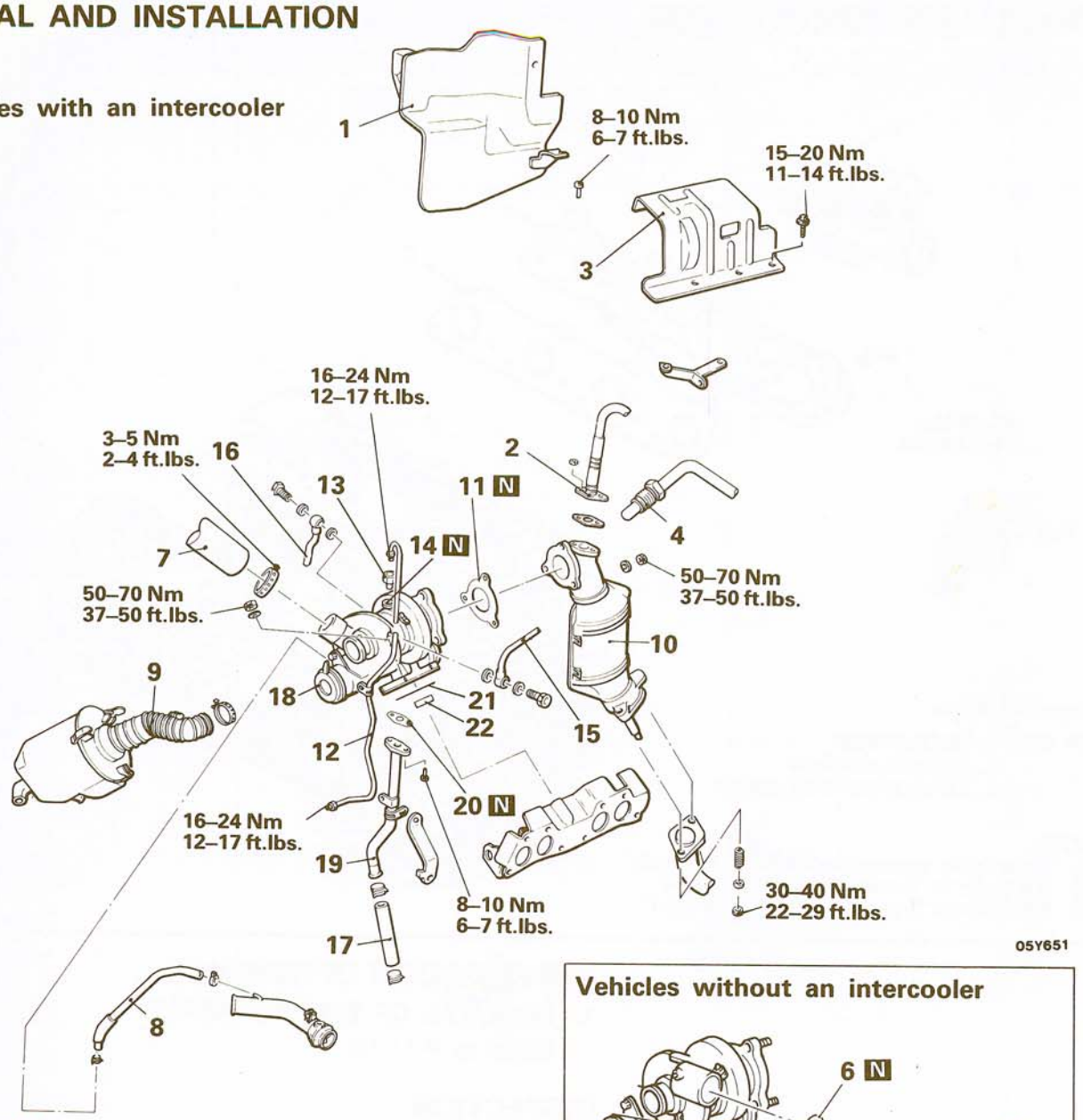

Vehicles without an intercooler

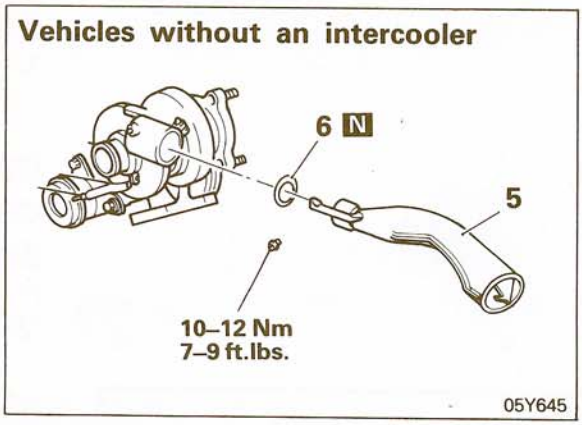

Removal steps

1. Heat protector
2. Oxygen sensor
3. Heat protector
4. Secondary air pipe
5. Air intake pipe (vehicles without an intercooler)
6. O-ring (vehicles without an intercooler)
7. Air hose A (vehicles with an intercooler)
8. Boost hose (vehicles with an intercooler)
9. Air intake hose
- ◆◆ 10. Catalytic converter
11. Gasket
- ◆◆ ◆◆ 12. Oil pipe
13. Nut
14. Gasket
15. Water pipe A
16. Water pipe B
17. Oil hose
- ◆◆ 18. Turbocharger
19. Oil return pipe
20. Gasket
21. Gasket
22. Ring

NOTE
(1) Reverse the removal procedures to reinstall.
(2) ◆◆: Refer to "Service Points of Removal".
(3) ◆◆: Refer to "Service Points of Installation".
(4) N: Non-reusable parts

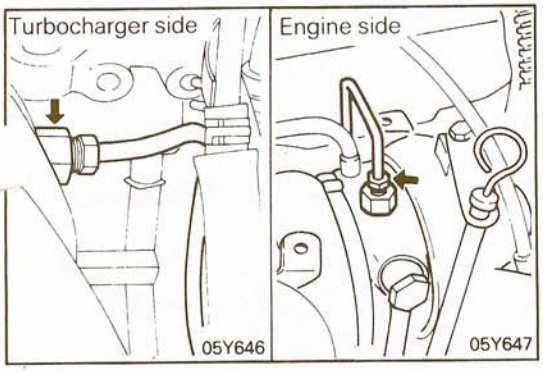

SERVICE POINTS OF REMOVAL N11LBAB

12. REMOVAL OF OIL PIPE

Remove the oil pipe.

Caution
Do not allow foreign matter to get into the oil path of the turbocharger.

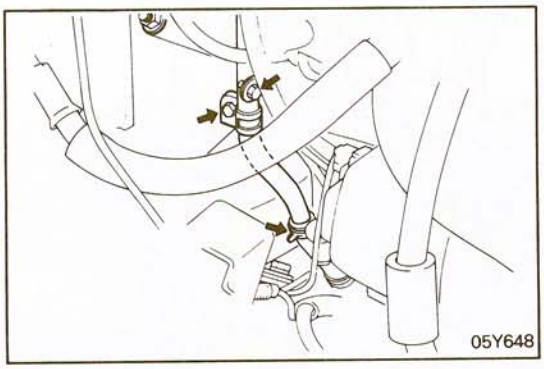

18. REMOVAL OF TURBOCHARGER

(1) Remove the oil return pipe clamp.
(2) Remove the turbocharger attaching nuts and remove the turbocharger with oil return pipe installed.

INSPECTION N11LCAA

- Check the oil pipe for clogging, collapse or deformation.
- Check the oil return pipe for clogging, collapse or deformation.
- Check the turbine wheel and compressor wheel for damage.
- Check the gasket for damage, corrosion and deformation.

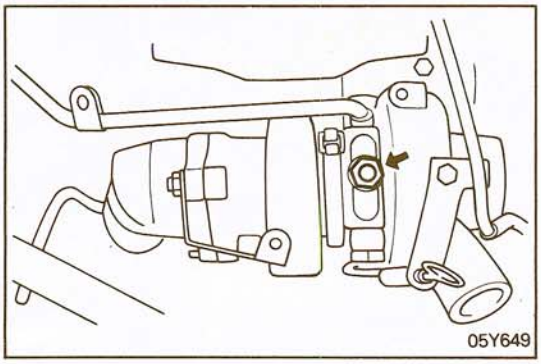

SERVICE POINTS OF INSTALLATION N11LDAB

12. INSTALLATION OF OIL PIPE

Before installing the flare nut on the oil pipe turbocharger side, pour a small amount of engine oil in the oil path.

10. INSTALLATION OF CATALYTIC CONVERTER

When installing the catalytic converter or exhaust fitting, tighten temporarily the turbocharger side first and then the exhaust pipe side. Then, tighten to specified torque.

TURBOCHARGER

N11LE- -

DISASSEMBLY AND REASSEMBLY

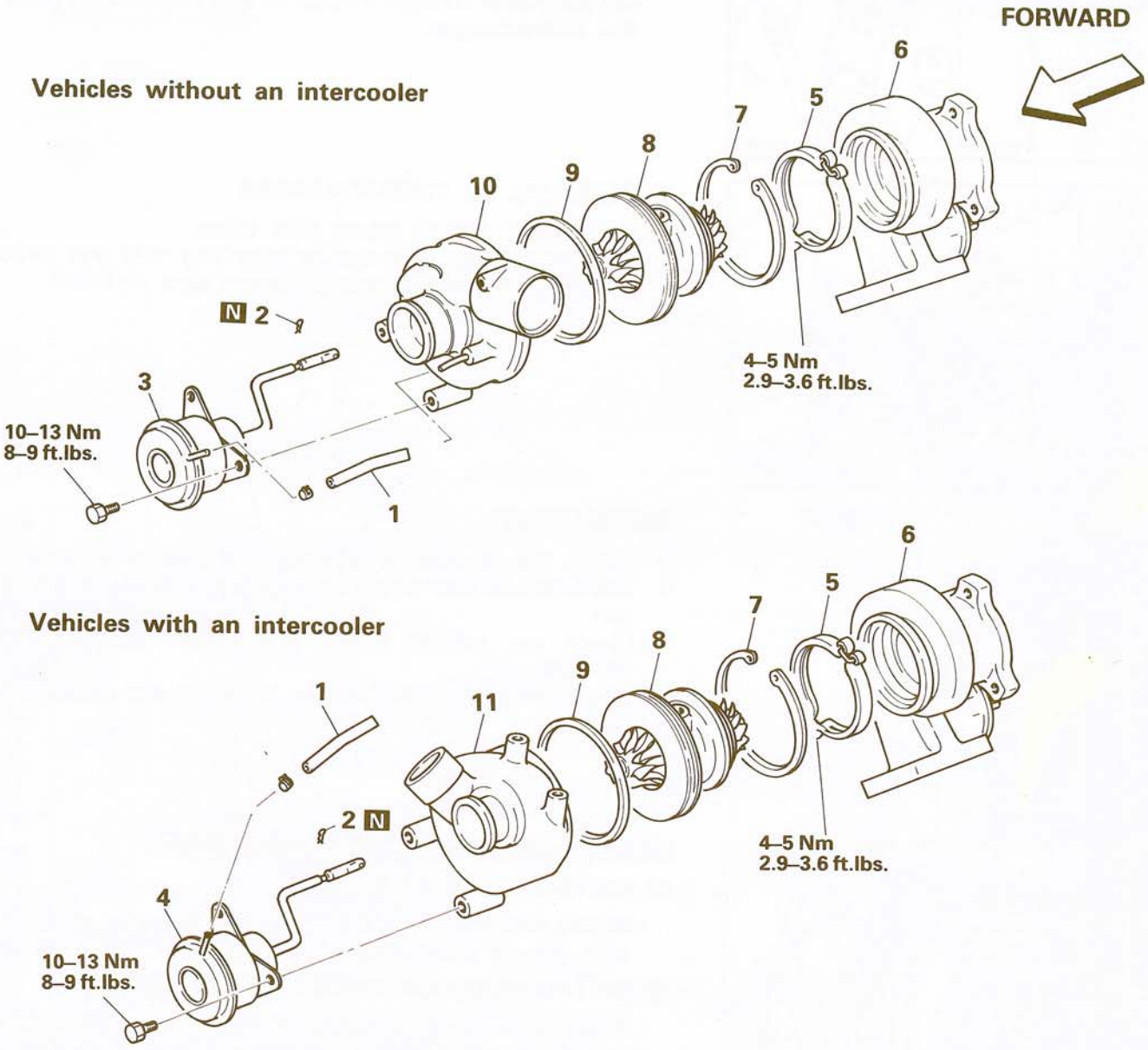

Disassembly steps

1. Boost hose
2. Snap pin
3. Waste gate actuator (vehicles without an intercooler)
4. Waste gate actuator (vehicles with an intercooler)
5. Coupling
6. Turbine housing
7. Snap ring
8. Cartridge assembly
9. O-ring
10. Compressor cover (vehicles without an intercooler)
11. Compressor cover (vehicles with an intercooler)

NOTE
(1) Reverse the disassembly procedures to reassemble.
(2) ◆◆: Refer to "Service Points of Disassembly".
(3) ◆◆: Refer to "Service Points of Reassembly".
(4) N: Non-reusable parts

51N020

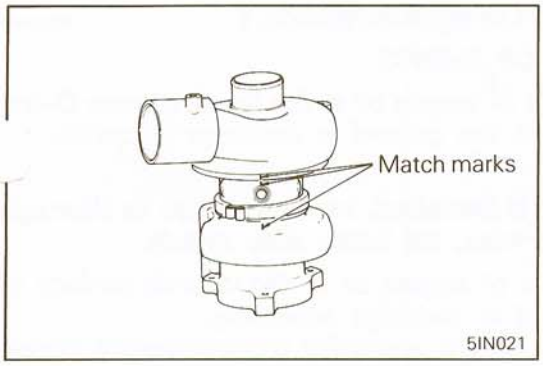

SERVICE POINTS OF DISASSEMBLY N11LFAA

6. REMOVAL OF TURBINE HOUSING

Before turbine housing is removed, make match marks on turbine housing and compressor cover.

Caution
Never attempt to adjust the waste gate valve.

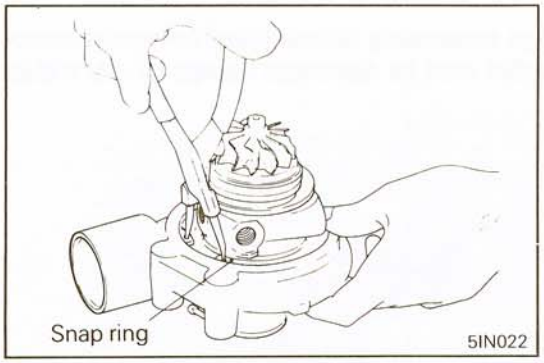

7. REMOVAL OF SNAP RING

Place the compressor cover assembly on floor with its end surface down and remove the snap ring with pliers.

Caution
During removal, hold with a finger the snap ring which can spring out.

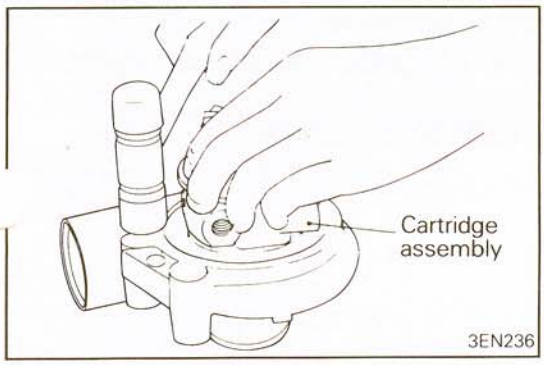

8. REMOVAL OF CARTRIDGE ASSEMBLY

Remove the cartridge assembly by tapping the periphery of compressor cover with a soft hammer.
Some resistance will be experienced in the removal due to the O-ring on cartridge assembly.

INSPECTION N11LGAA

TURBOCHARGER

(1) Inspect the cast-iron turbine housing for damage, cracks, or evidence of contact between the turbine blades and the housing.
(2) Manually open and close the waste gate valve to make sure it operates freely.
(3) Inspect the turbine and compressor wheels for wear, damage, bent or broken blades.
(4) Inspect the oil passage in the cartridge for signs of deposits or blockage.
(5) Clean the inlet section of the compressor cover with a rag. Inspect it for signs of contact with the compressor turbine. If worn, replace it.

WASTE GATE ACTUATOR

(1) Leak-test the waste gate valve actuator with a hand pump. Replace the actuator if leakage indicates a ruptured diaphragm.
(2) Check the rod to see that it is not bent or binding so as to require replacement.

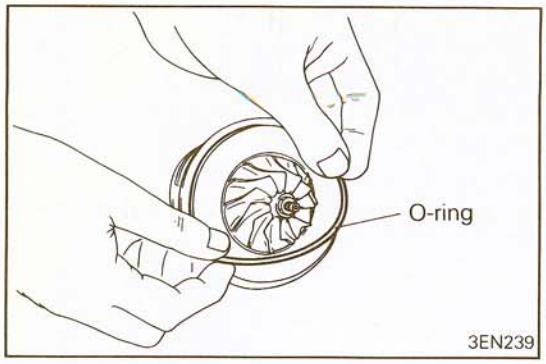

SERVICE POINTS OF REASSEMBLY

N11LHAA

9. INSTALLATION OF O-RING

(1) Apply thin coat of engine oil to the inside of new O-ring and insert it in the groove in cartridge assembly.

Caution
When O-ring is installed, be careful not to damage O-ring. Otherwise, oil leaks may result.

(2) Apply thin coat of engine oil to the outside surface of O-ring installed in cartridge assembly.
Then install cartridge assembly to compressor cover.

Caution
When cartridge assembly is installed to compressor cover, be careful not to damage vanes of cartridge assembly.

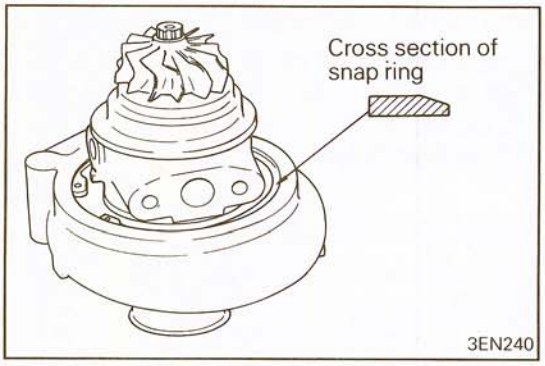

7. INSTALLATION OF SNAP RING

Install snap ring with compressor cover side down.

Caution
Install snap ring with taper surface up.

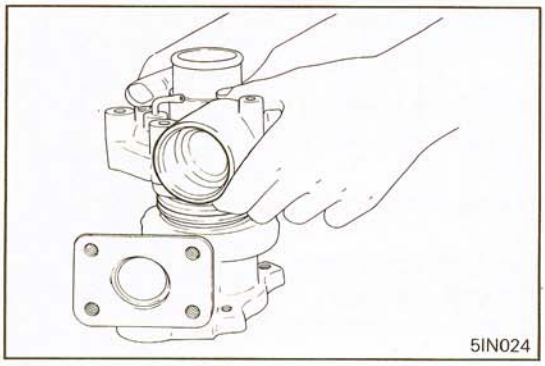

6. INSTALLATION OF TURBINE HOUSING

(1) Place the compressor cover with cartridge assembly inside on floor with its end surface down and install the snap ring.
(2) Combine the compressor cover and cartridge assembly with the turbine housing.

Caution
Do not damage the cartridge assembly vanes.

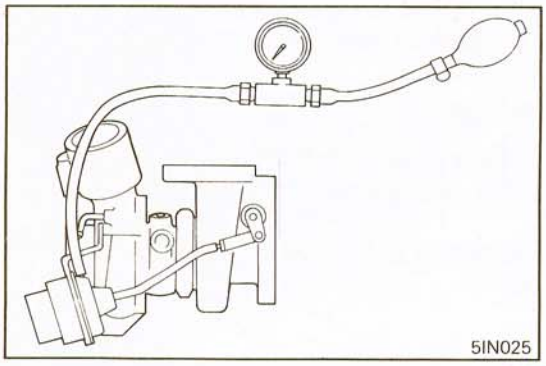

TEST OF WASTE GATE ACTUATOR OPERATION

N11LIAA

Using a tester, check the rod operation by applying pressure to waste gate actuator.

Applied pressure value:
Vehicles without an intercooler
Approx. 57 kPa (8.1 psi)
Vehicles with an intercooler
Approx. 68 kPa (9.7 psi)

Caution
Do not apply a pressure of more than specified value to actuator. Otherwise, diaphragm may be damaged.

EXHAUST PIPES AND MUFFLERS

N11RA--

REMOVAL AND INSTALLATION

Vehicles without an intercooler

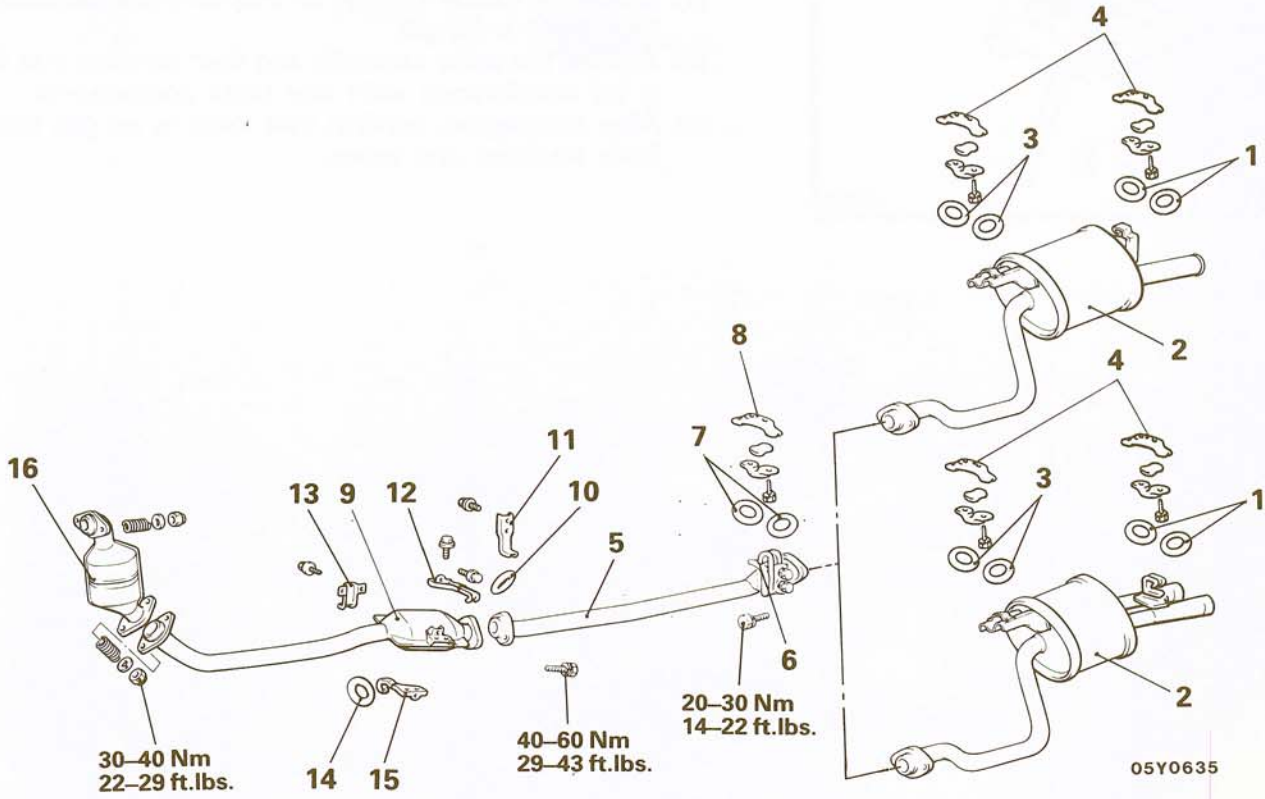

Vehicles with an intercooler

Removal steps

- ◆◆ 1. O-ring
- 2. Main muffler
- ◆◆ 3. O-ring
- 4. Hanger
- 5. Center exhaust pipe
- 6. Hook
- ◆◆ 7. O-ring
- 8. Hanger
- 9. Rear catalytic converter
- ◆◆ 10. O-ring
- 11. Hanger
- 12. Bracket
- 13. Hanger
- ◆◆ 14. O-ring
- 15. Bracket
- 16. Front catalytic converter

NOTE
(1) Reverse the removal procedures to reinstall.
(2) ◆◆: Refer to "Service Points of Removal"

INSPECTION

N11RCAF

- Check the mufflers and pipes for corrosion and damage.
- Check suspenders and O-rings for wear and cracks.
- Check the heat protector for corrosion and damage.

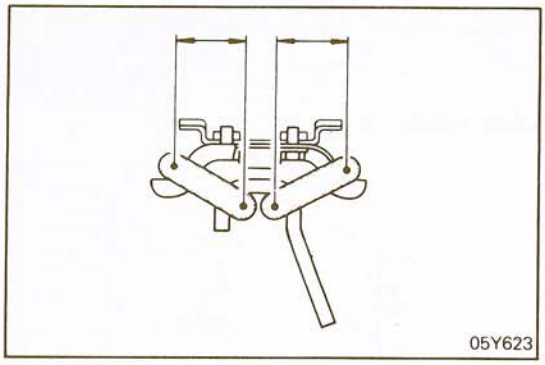

SERVICE POINTS OF INSTALLATION N11RDAF

14. INSTALLATION OF O-RING / 10. O-RING / 7. O-RING / 3. O-RING / 1. O-RING

(1) Install the rubber O-rings so that they are identical (l and right) in length.
(2) Tighten the parts securely, and then confirm that there is no interference with any body components.
(3) After installation, confirm that there is no gas leakage from mufflers and pipes.

BODY AND FRAME ALIGNMENT

CONTENTS

BODY DIMENSIONS AND MEASUREMENT METHODS 2
- Body Center Points 3
- How Body Dimensions are Indicated 2
- Indication of Reference Dimensions 2
- Measurement Methods 3
- Measurement Points 2

FRAME CENTERING GAUGE MOUNTING POSITIONS 4

TYPE A (PROJECTED DIMENSIONS) 6

TYPE B (ACTUAL-MEASUREMENT DIMENSIONS) 8

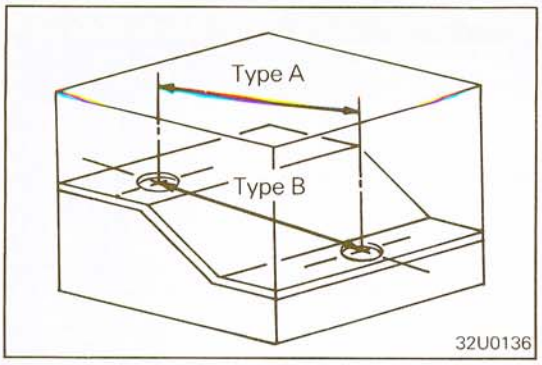

BODY DIMENSIONS AND MEASUREMENT METHODS

N13GAAA

HOW BODY DIMENSIONS ARE INDICATED

1. Type A (Projected dimensions)
   These are the dimensions measured when the measurement points are projected into the reference plane, and are the reference dimensions used for body alterations.
2. Type B (Actual-measurement dimensions)
   These dimensions indicate the actual linear distance between measurement points, and are the reference dimensions for use if a tracking gauge is used for measurements.
3. The units given for the dimensions of both types (A and B) are mm (in.).

INDICATION OF REFERENCE DIMENSIONS

If the reference dimension number (in a circle) shown on the top line of the dimension table at left is marked with *, measurements are taken of this standard dimension and another which are symmetrical with respect to the car centerline.

mm (in.)

No.	①	②	③*	④*
Length	940 (37.01)	928 (36.54)	1,240 (48.82)	716 (28.19)

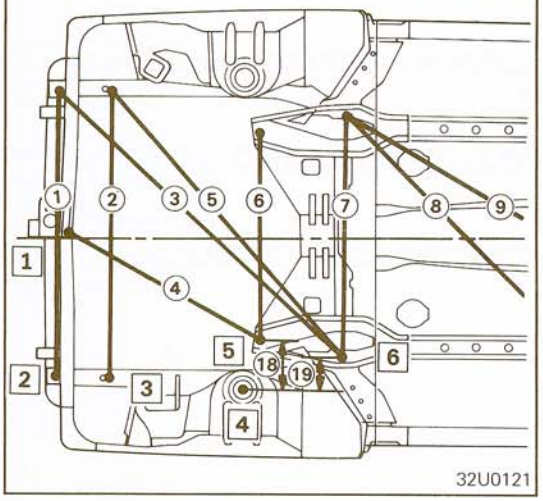

MEASUREMENT POINTS

Measurement points are used to indicate the following:

1. If a measurement is to be made at a hole center, the point of the surface from which the measuring instrument is applied is the measurement point.

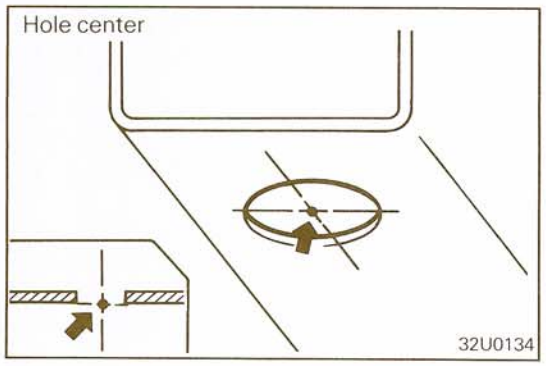

2. If a measurement is to be made at the circumference of a hole, the point of the hole circumference of the surface from which the measuring instrument is applied is the measurement point.

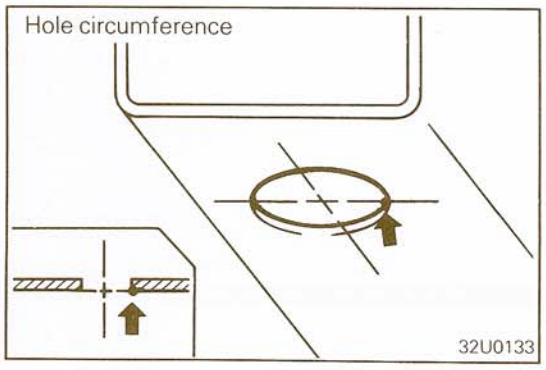

STB Revision

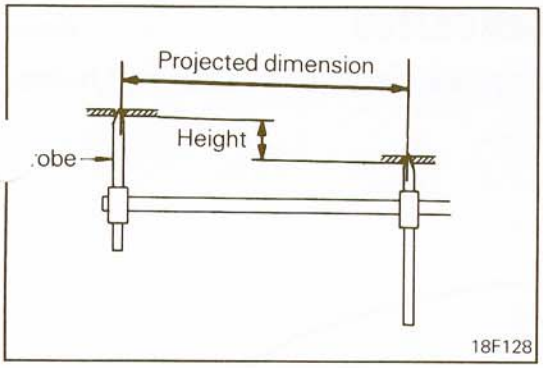

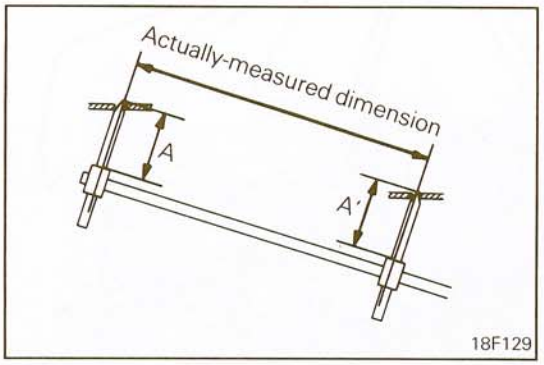

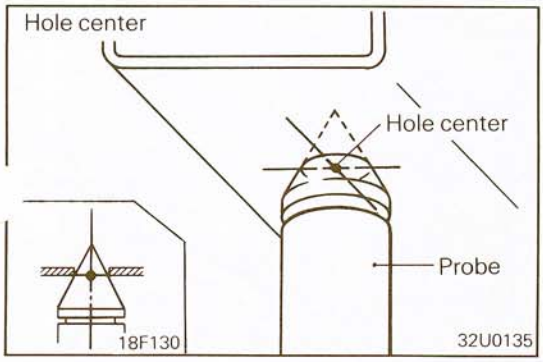

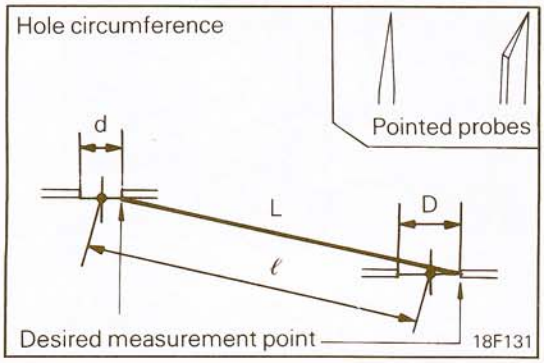

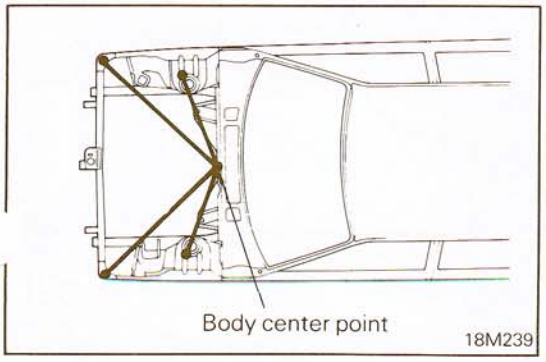

MEASUREMENT METHODS

USING A TRACKING GAUGE

NOTE
Use tracking gauge without looseness between gauge body and probes.

1. TYPE A (PROJECTED DIMENSIONS)

If the length of the tracking gauge probes are adjustable, make the measurement by lengthening one probe by the amount equivalent to the difference in height of the two surfaces.

2. TYPE B (ACTUAL-MEASUREMENT DIMENSIONS)

Measure by first adjusting both probes to the same length (A = A').

3. IF HOLE DIAMETERS ARE THE SAME AND THE PROBES ARE CONICAL

For both Type A and Type B, insert the probes into the holes, and then make the measurement. This method of measurement should be used if the diameters of the holes in the location to be measured are the same.

4. IF HOLE DIAMETERS ARE DIFFERENT, OR THE PROBES ARE POINTED

Because measurement at the hole centers is impossible, the circumferences must be used instead.

HOW TO DETERMINE DIMENSIONS

Desired dimensions: $L = \ell + \frac{D - d}{2}$

Example: mm (in.)

Reference dimensions: ℓ = 600 (23.6)

Measured hole diameters: D = 20ϕ (0.79), d = 10ϕ (0.39)

Desired dimensions:

$$L = 600\ (23.6) + \frac{20\phi\ (0.79) - 10\phi\ (0.39)}{2}$$

$$= 605\ (23.8)$$

BODY CENTER POINTS

When measuring locations that should be symmetrical left and right and there are no specific instructions with regard to measurements in "Body and Frame Alignment", the body center points should be used to confirm that the left and right measurements from these points are the same. One body center point is specified for the front of the body and another is specified for the rear.

STB Revision

FRAME CENTERING GAUGE MOUNTING POSITIONS

N13HA--

Mount frame centering gauges at positions to check frame for lateral and longitudinal bends and twists.

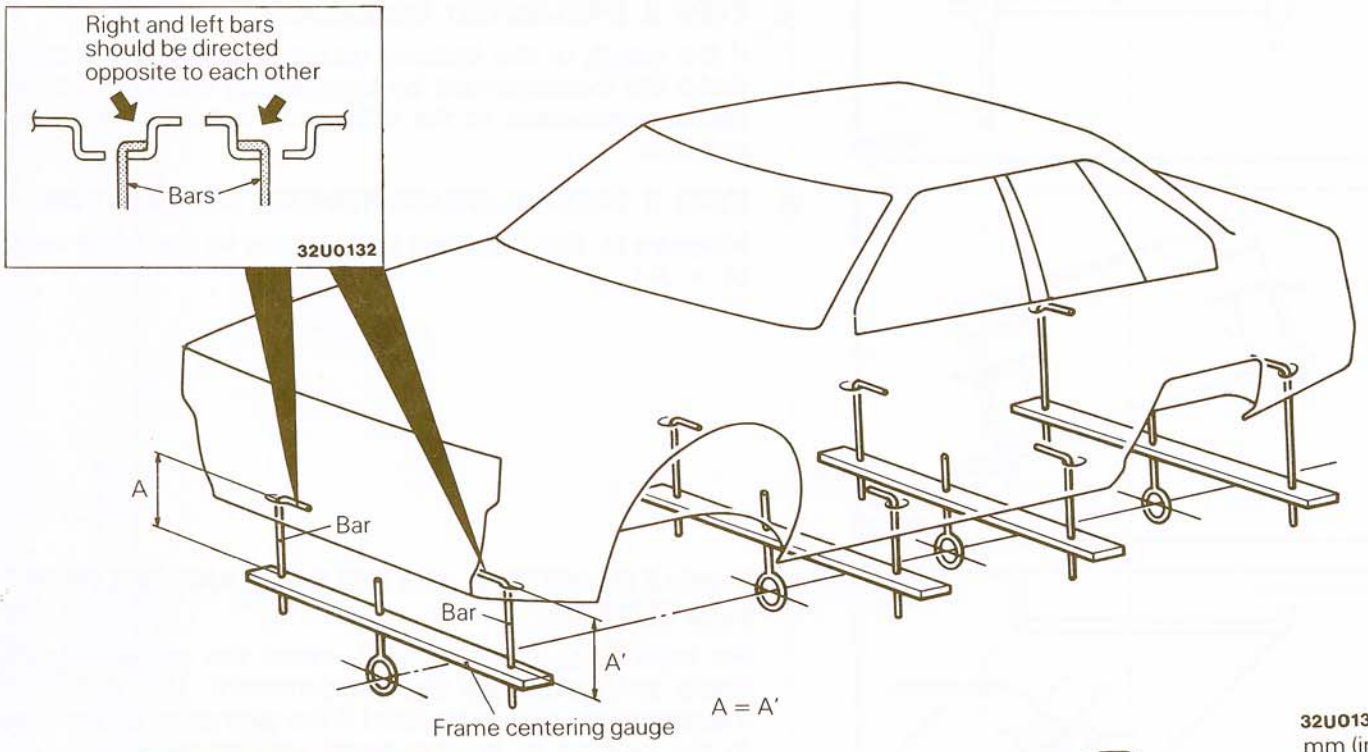

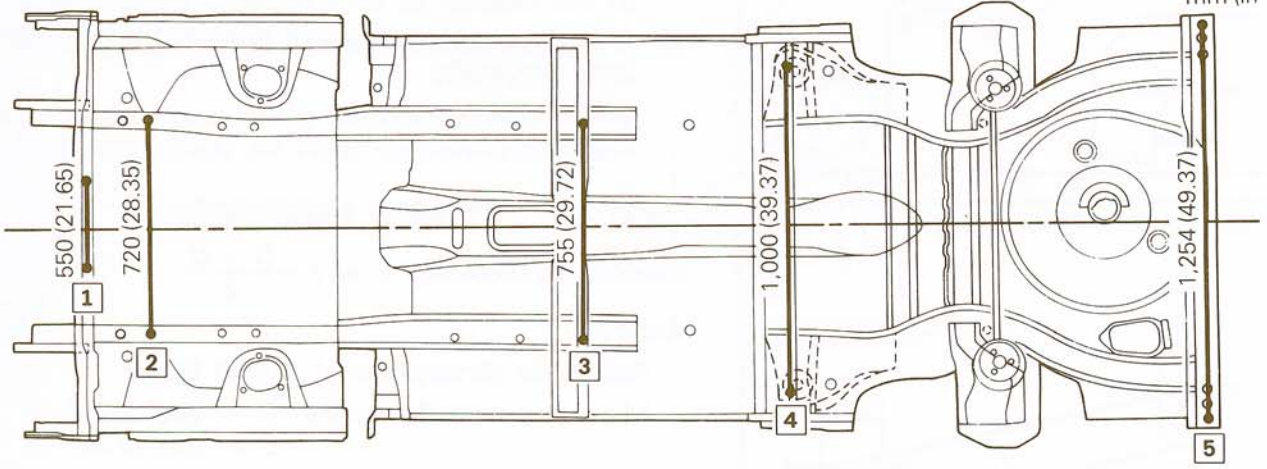

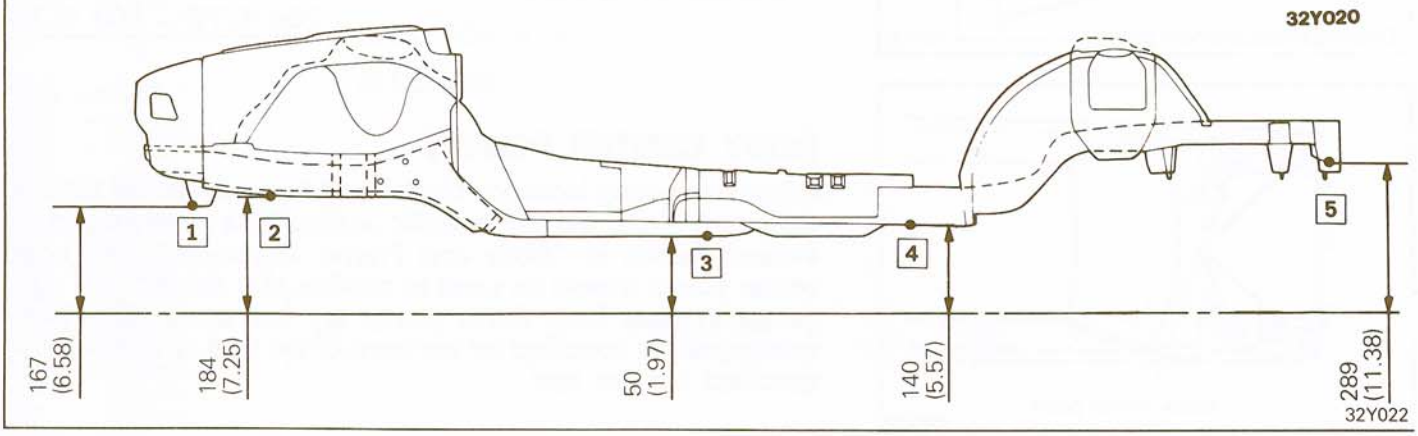

STB Revision

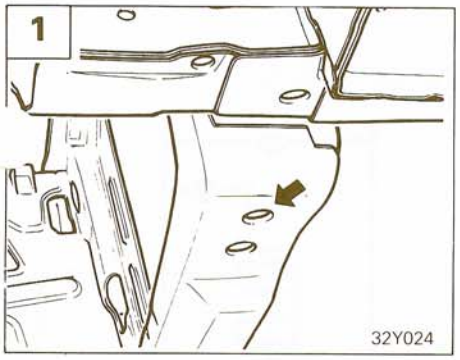

Strut bar bracket installation hole [diameter 11 mm (0.43 in.)]

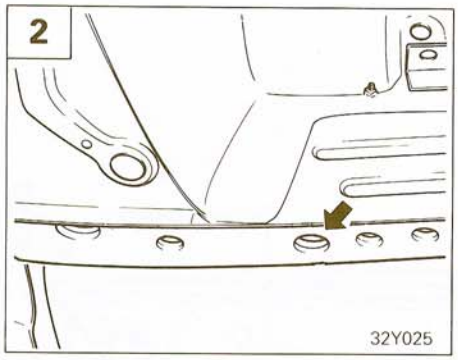

Strut bar bracket installation hole [diameter 11 mm (0.43 in.)]

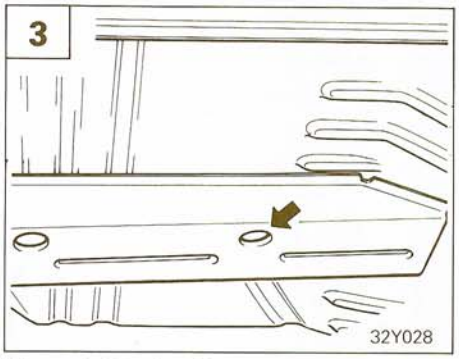

Water drainhole of front sidemember, rear [diameter 20 mm (0.79 in.)]

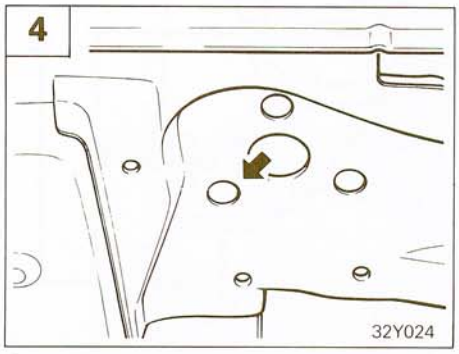

Front support pin installation hole [diameter 13 mm (0.51 in.)]

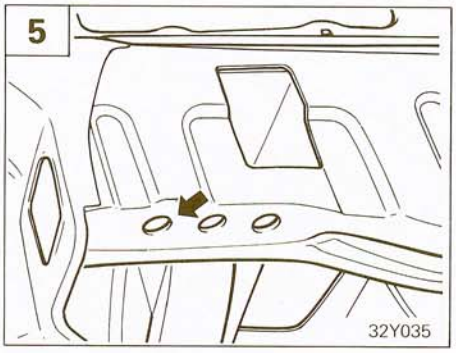

Towing hook installation hole [diameter 13 mm (0.51 in.)]

TYPE A (PROJECTED DIMENSIONS)

mm (in.)

No.	①	②	③	④	⑤	⑥	⑦	⑧	⑨	⑩	⑪	⑫	⑬*	⑭	⑮*	⑯*	⑰	⑱*
Length	550 (21.65)	857 (33.74)	842 (33.15)	720 (28.35)	778 (30.63)	760 (29.92)	710 (27.95)	1,324 (52.13)	1,335 (52.56)	1,959 (77.13)	1,967 (77.44)	755 (29.72)	1,096 (43.15)	1,000 (39.37)	1,164 (45.83)	1,814 (71.42)	760 (29.92)	1,203 (47.36)
No.	⑲	⑳	㉑	㉒	㉓	㉔*	㉕	㉖	㉗	㉘	㉙	㉚	㉛	㉜	㉝	㉞	㉟	㊱
Length	1,254 (49.37)	160 (6.30)	104 (4.09)	140 (5.51)	84 (3.31)	84 (3.31)	36 (1.42)	1,110 (43.70)	284 (11.18)	577 (22.72)	724 (28.50)	771 (30.35)	1,427 (56.18)	58 (2.28)	117 (4.61)	134 (5.28)	626 (24.65)	621 (24.45)
No.	㊲	㊳	㊴	㊵	㊶													
Length	130 (5.12)	90 (3.54)	280 (11.02)	239 (9.41)	617 (24.29)													

STB Revision

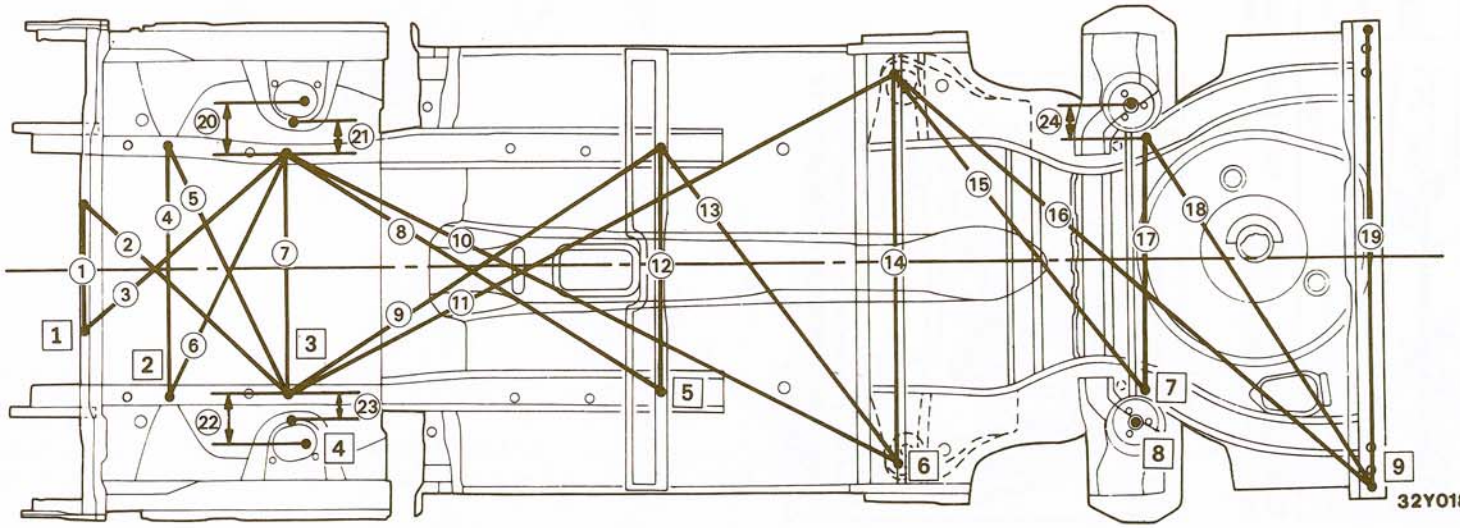

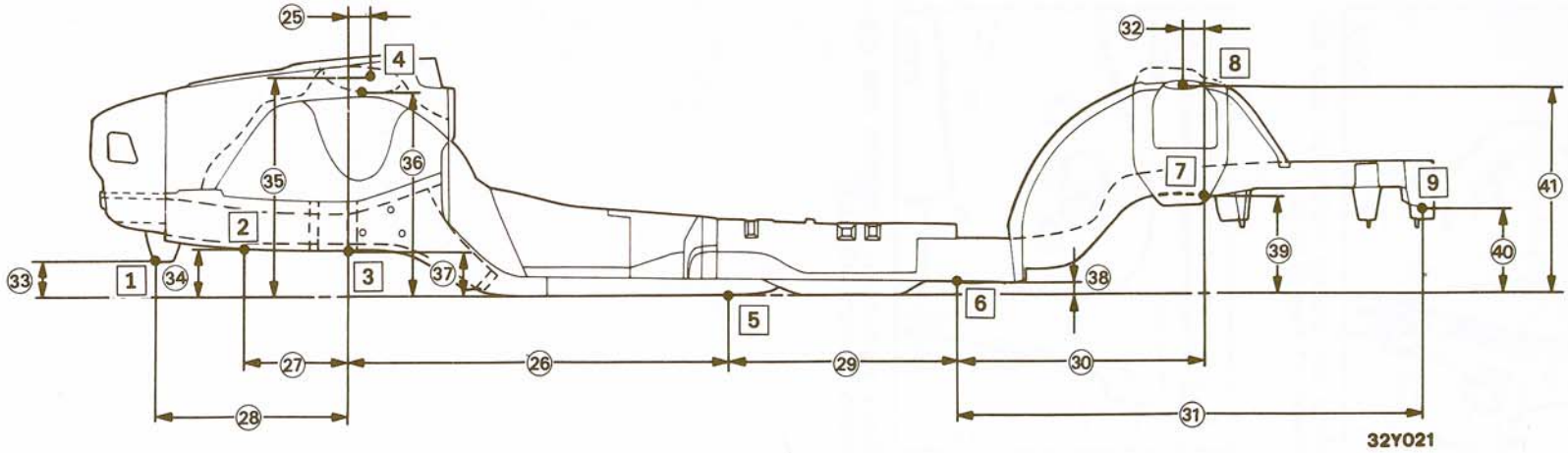

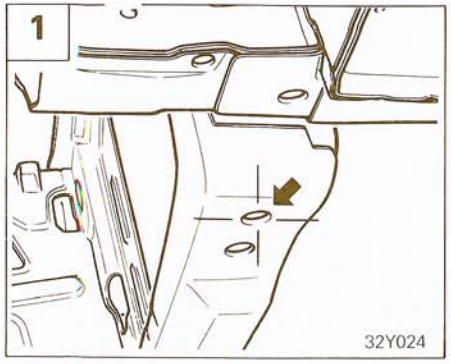

Strut bar bracket installation hole center [diameter 11 mm (0.43 in.)]

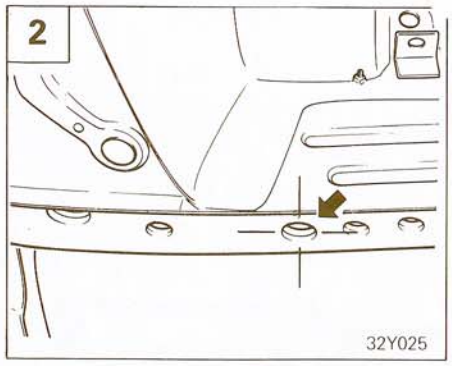

Strut bar bracket installation hole center [diameter 11 mm (0.43 in.)]

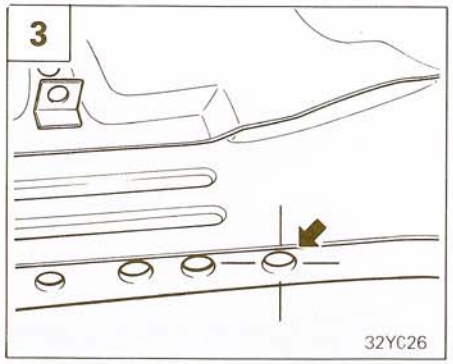

Center of mounting hole of crossmember [diameter 14.5 mm (0.57 in.)]

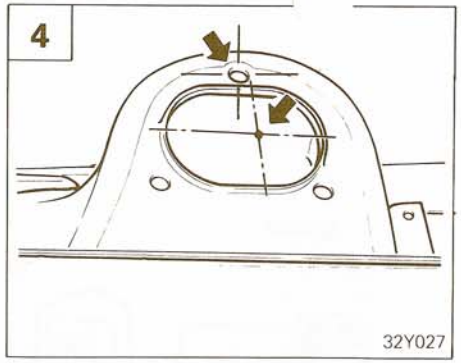

Strut insulator center
Strut insulator installation hole center [diameter 11 mm (0.43 in.)]

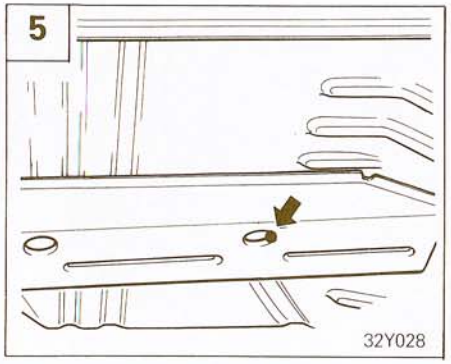

Rear portion of water drainhole of front sidemember, rear

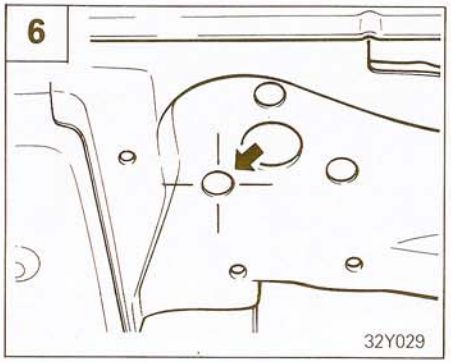

Front support pin installation hole center [diameter 13 mm (0.51 in.)]

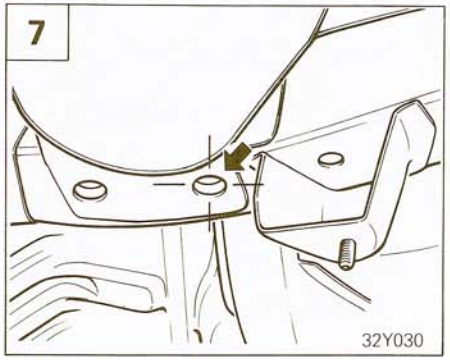

Crossmember installation hole center [diameter 16 mm (0.63 in.)]

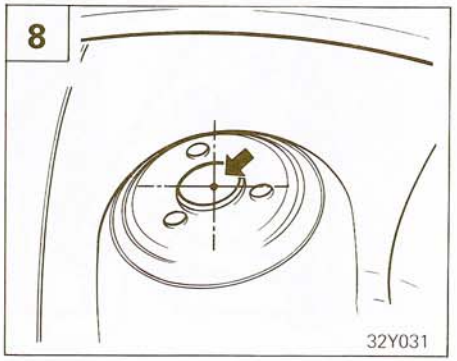

Strut insulator center [diameter 36 mm (1.42 in.)]



Towing hook installation hole center [diameter 13 mm (0.51 in.)]

TYPE B (ACTUAL-MEASUREMENT DIMENSIONS)

UNDER BODY

mm (in.)

No.	①	②*	③	④*	⑤	⑥	⑦	⑧	⑨	⑩*
Length	550 (21.65)	1,806 (71.10)	720 (28.35)	1,582 (62.28)	710 (27.95)	652 (25.67)	1,331 (52.40)	1,342 (52.83)	755 (29.72)	1,100 (43.31)
No.	⑪	⑫*	⑬*	⑭	⑮*	⑯	⑰	⑱	⑲*	⑳
Length	1,000 (39.37)	1,179 (46.42)	1,820 (71.65)	760 (29.92)	1,204 (47.40)	1,254 (49.37)	866 (34.09)	1,290 (50.79)	1,002 (39.45)	682 (26.85)

STB Revision

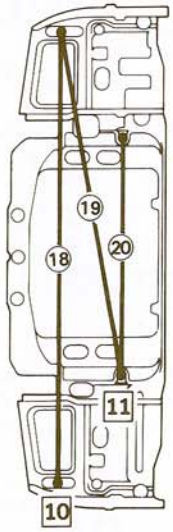

32Y055

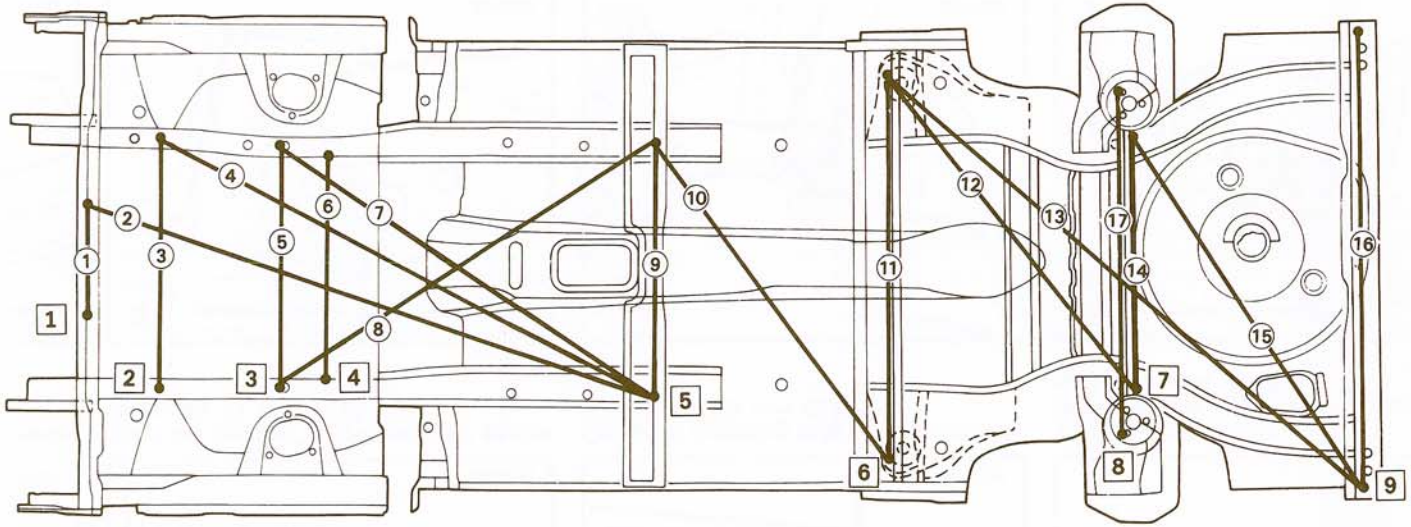

32Y019

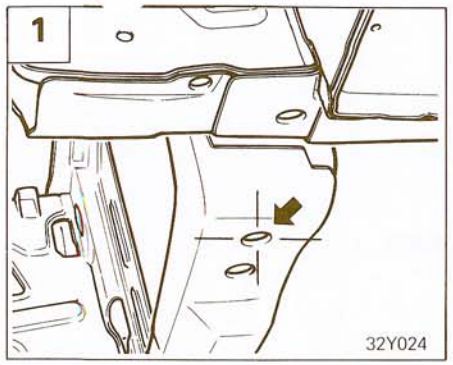

Strut bar bracket installation hole center [diameter 11 mm (0.43 in.)]

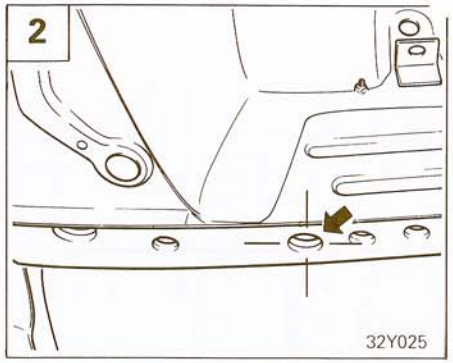

Strut bar bracket installation hole center [diameter 11 mm (0.43 in.)]

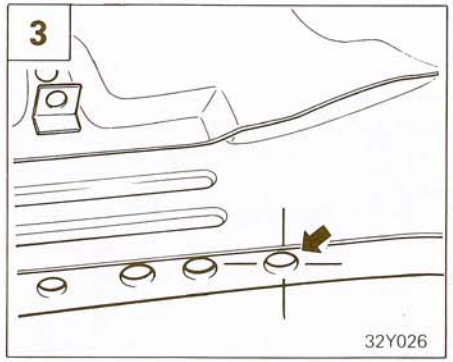

Center of mounting hole of crossmember [diameter 14.5 mm (0.57 in.)]

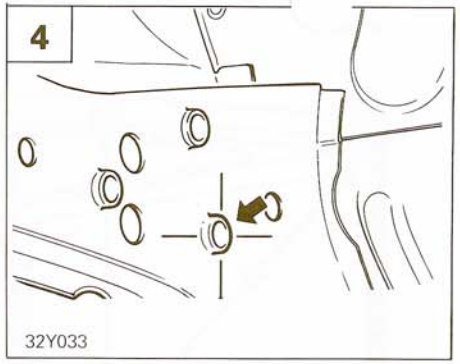

Steering gear box and idler arm installation hole center [diameter 11 mm (0.43 in.)]

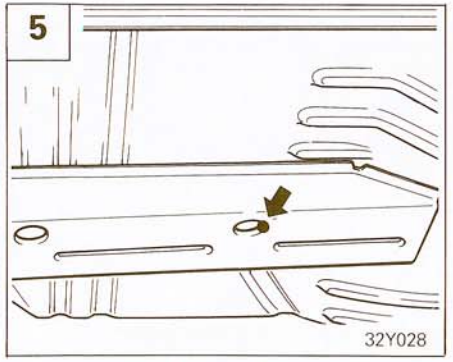

Rear portion of water drainhole of front sidemember, rear

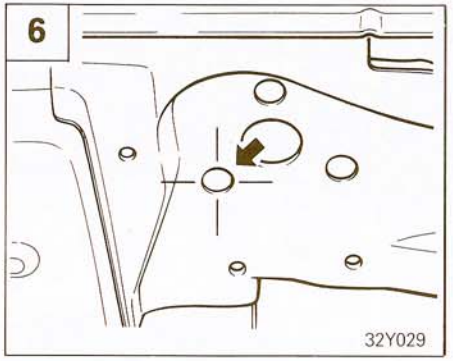

Front support pin installation hole center [diameter 13 mm (0.51 in.)]

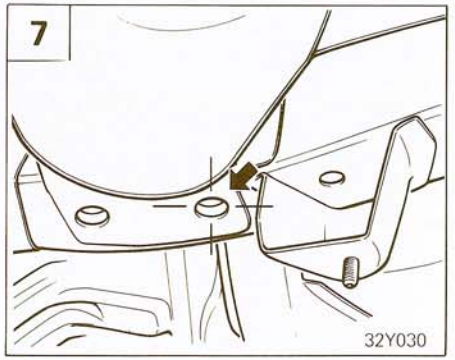

Crossmember installation hole center [diameter 16 mm (0.63 in.)]

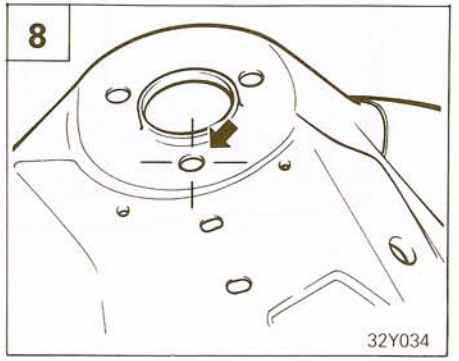

Center of mounting hole of strut insulator [diameter 11 mm (0.43 in.)]

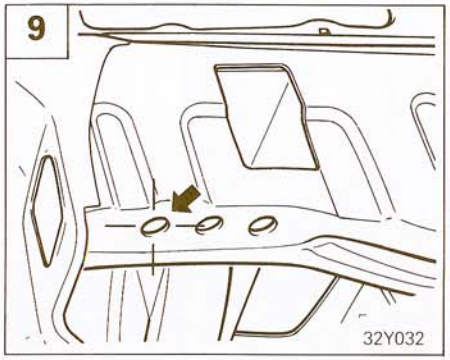

Towing hook installation hole center [diameter 13 mm (0.51 in.)]

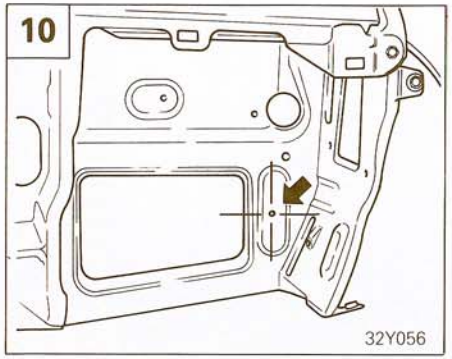

Weld nut hole [diameter 6.6 mm (0.26 in.)]

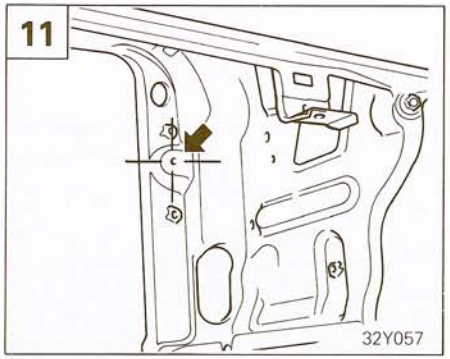

Cooler condenser installation hole center [diameter 6.6 mm (0.26 in.)]

ENGINE COMPARTMENT AND UPPER BODY

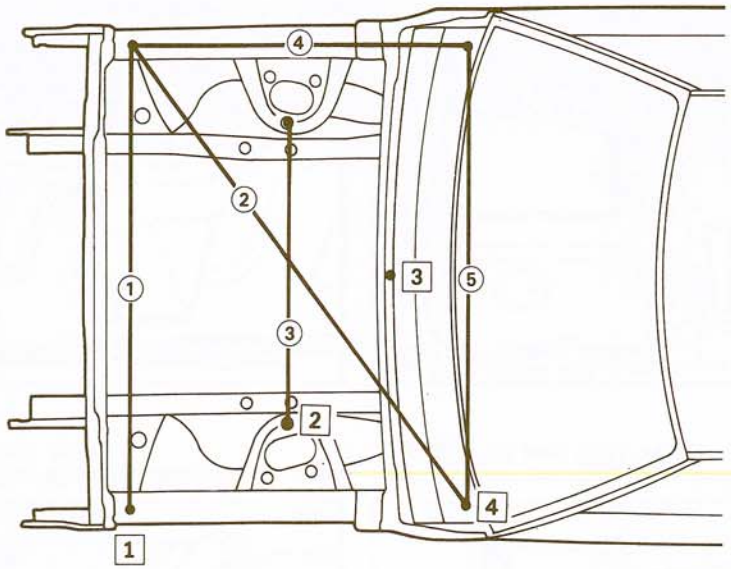

32Y015

mm (in.)

No.	①	②*	③	④*	⑤	⑥	⑦	⑧	⑨
Length	1,351 (53.19)	1,729 (68.07)	898 (35.35)	1,028 (40.47)	1,430 (56.30)	885 (34.84)	883 (34.76)	888 (34.96)	906 (35.67)
No.	⑩*	⑪	⑫	⑬	⑭	⑮*	⑯*	⑰	
Length	1,426 (56.14)	1,078 (42.44)	1,146 (45.12)	776 (30.55)	1,193 (46.97)	1,092 (42.99)	1,497 (58.94)	1,333 (52.48)	

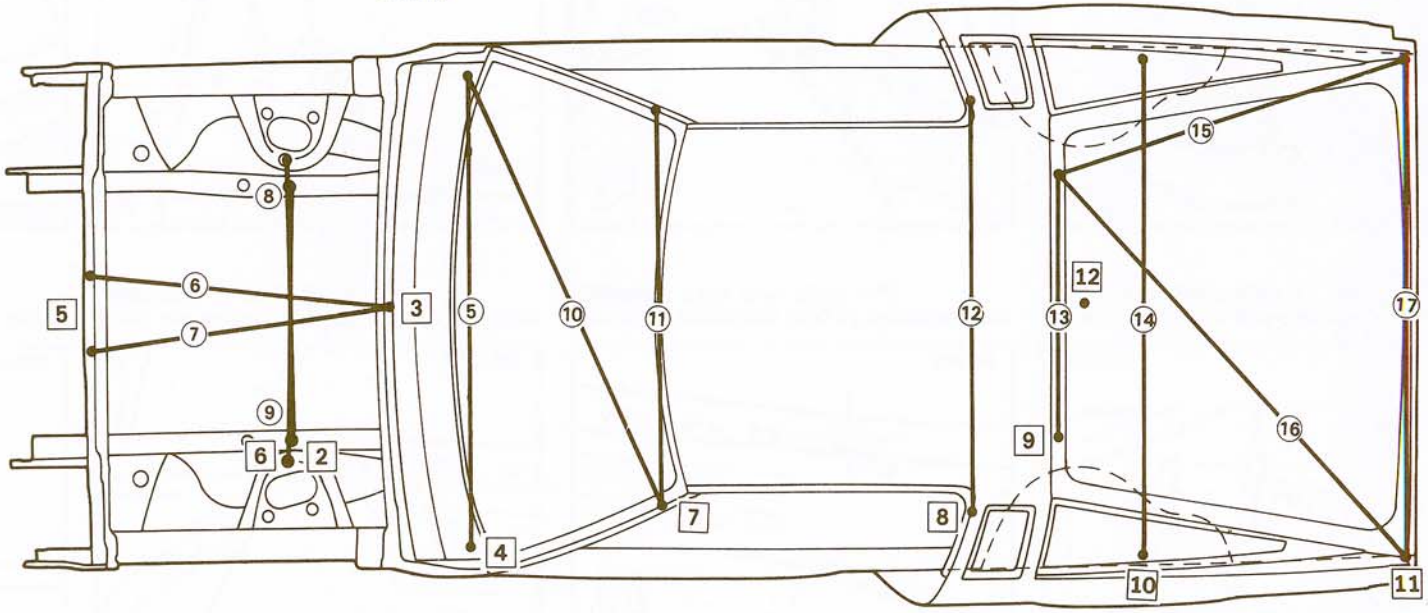

32Y016

STB Revision

STB Revision

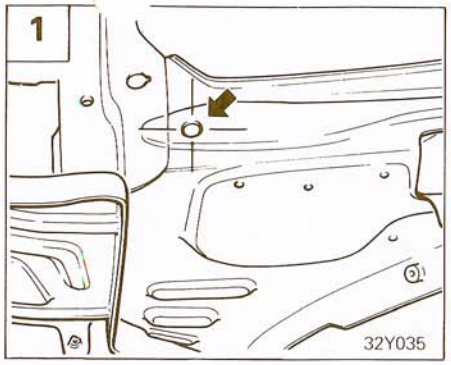

Fender installation hole center [diameter 6.5 mm (0.26 in.)]

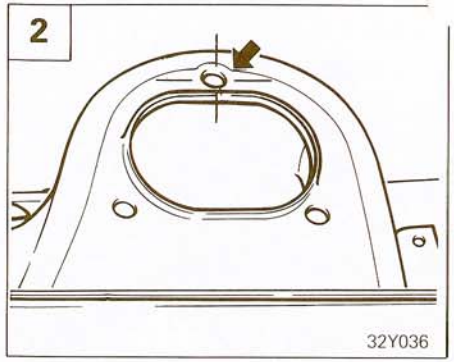

Strut insulator installation hole center [diameter 11 mm (0.43 in.)]

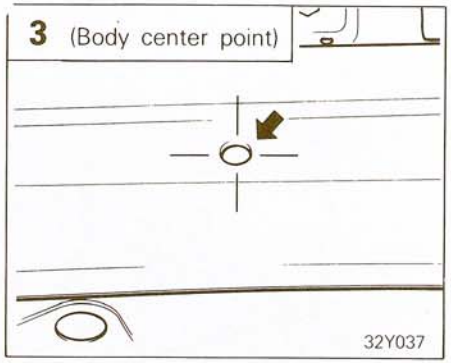

Weatherstrip installation hole center [diameter 6 mm (0.24 in.)]

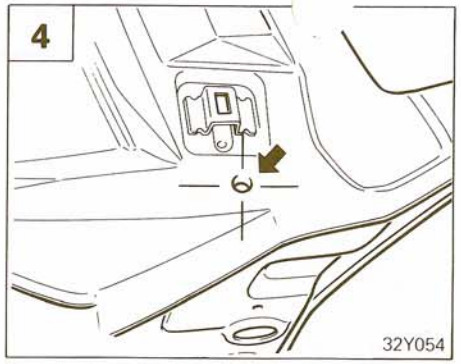

Fender installation hole center [diameter 6.5 mm (0.26 in.)]

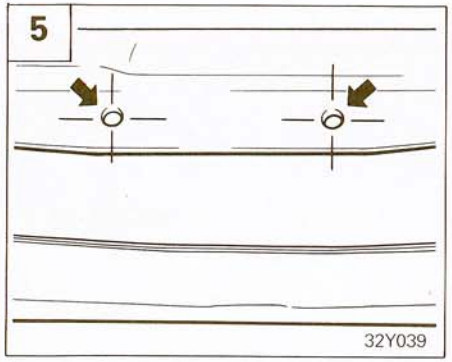

Center of mounting hole of engine hood lock plate [diamter 8 mm (0.31 in.)]

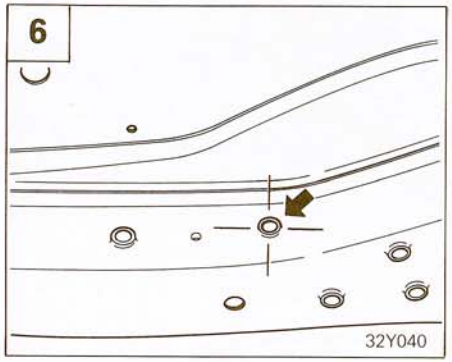

Center of mounting hole of crossmember [diameter 14.5 mm (0.57 in.)]

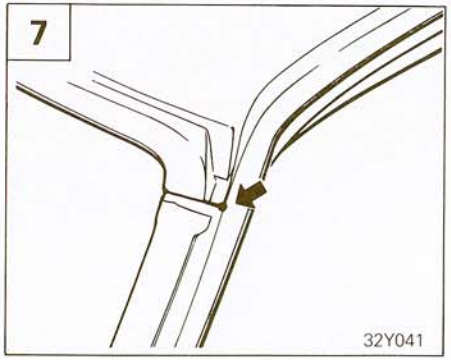

Joint of roof and front pillar

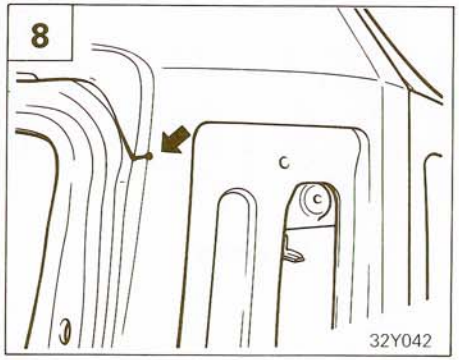

Joint of roof and quarter panel

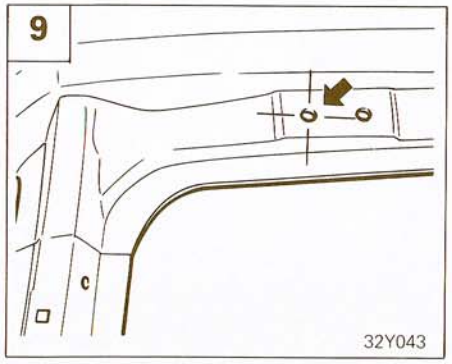

Center of hatch hinge mounting hole [diameter 10 mm (0.39 in.)]

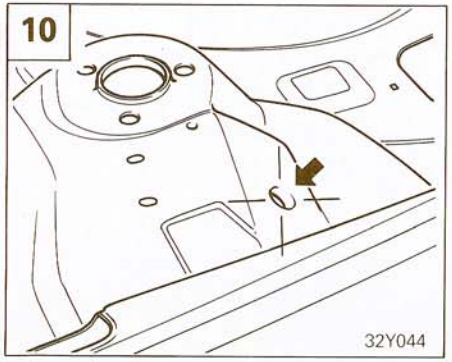

Seat belt retractor installation hole center [diameter 12.5 mm (0.49 in.)]

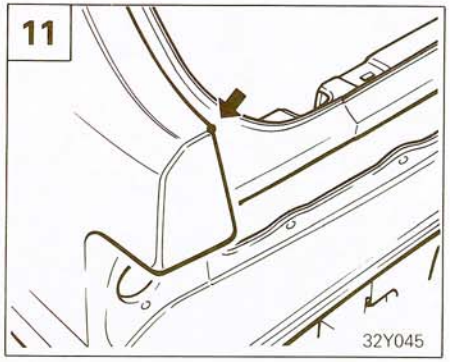

Hatch corner

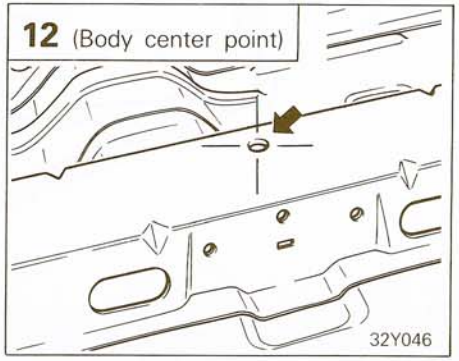

Board installation hole center [diameter 3 mm (0.12 in.)]

SIDE BODY

mm (in.)

No.	①	②	③	④	⑤	⑥	⑦	⑧
Length	415 (16.34)	1,027 (40.43)	1,475 (58.07)	1,650 (64.96)	1,218 (47.95)	1,133 (44.61)	1,075 (42.32)	954 (37.56)

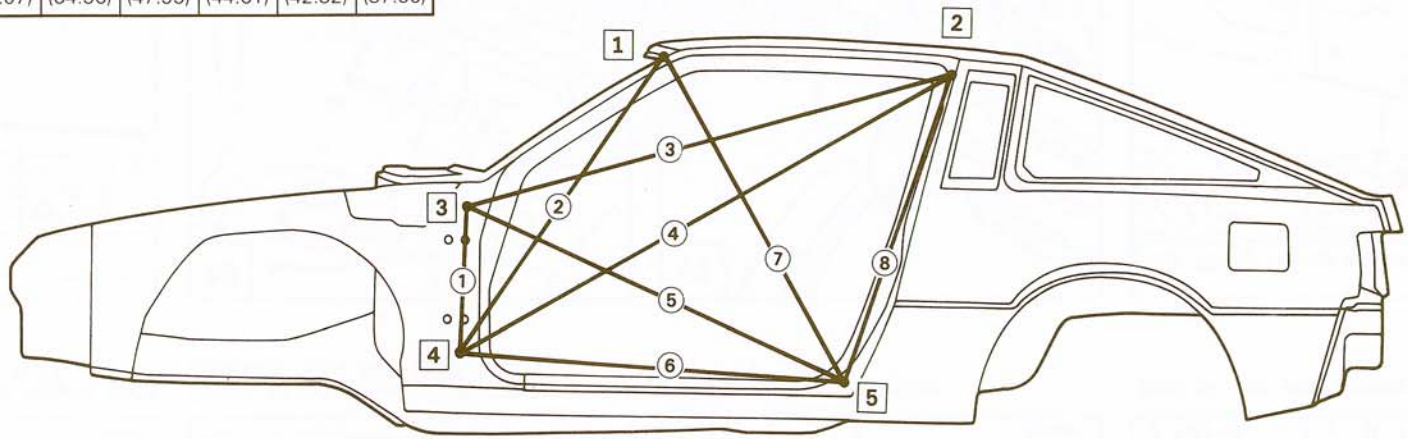

32Y017

STB Revision

INTERIOR

mm (in.)

No.	①	②	③	④	⑤*
Length	1,480 (58.27)	1,480 (58.27)	1,454 (57.24)	1,225 (48.23)	1,434 (56.46)

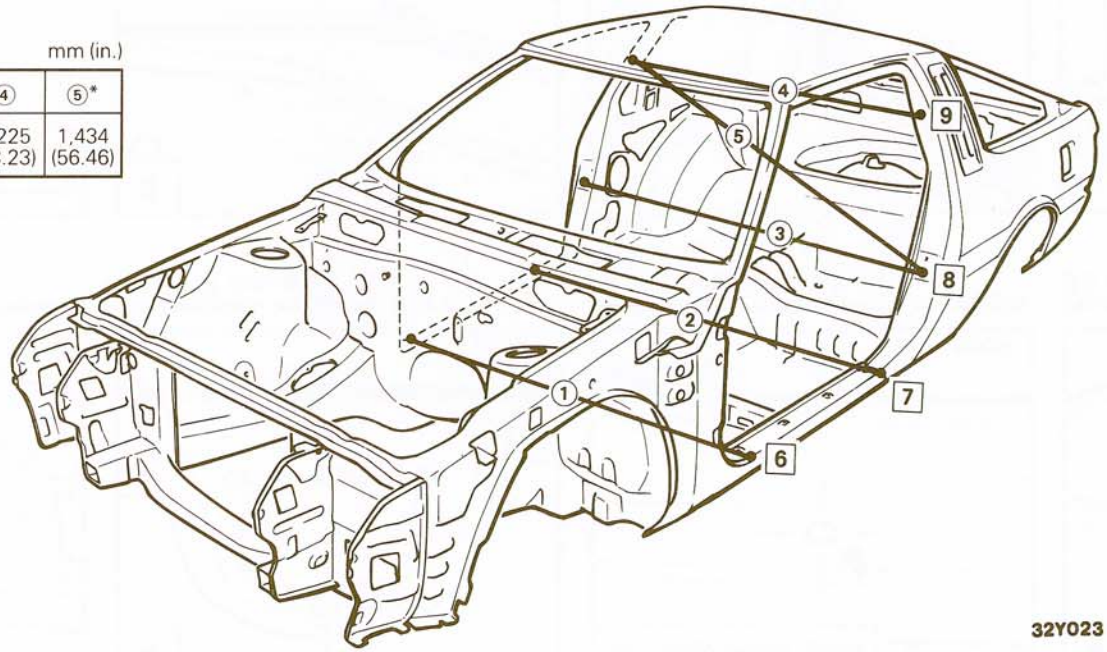

32Y023

STB Revision

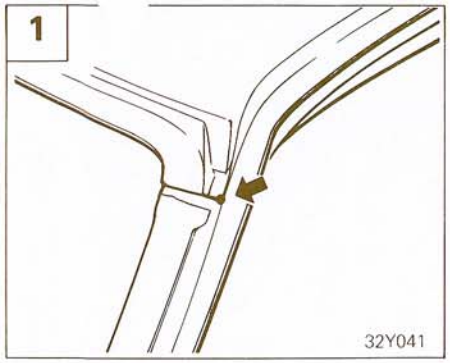

Joint of roof and front pillar

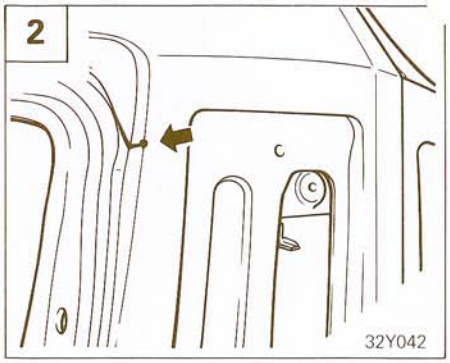

Joint of roof and quarter panel

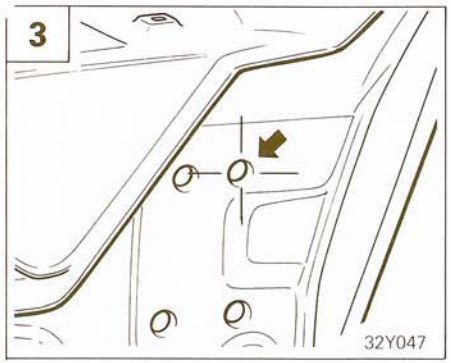

Center of front door hinge installation hole [diameter 9 mm (0.35 in.)]

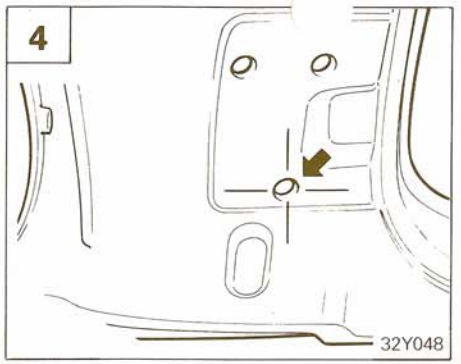

Center of front door hinge installation hole [diameter 9 mm (0.35 in.)]

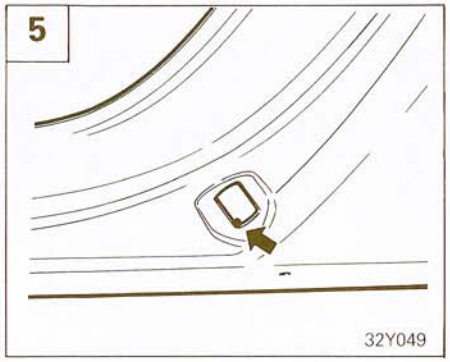

Door switch installation hole

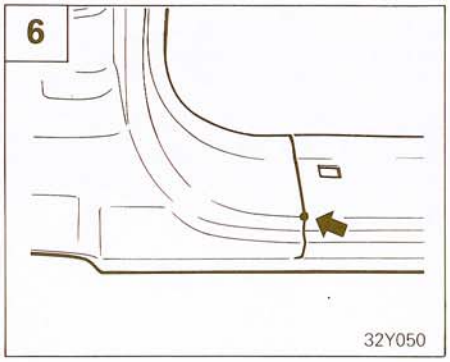

Joint of side sill and front pillar

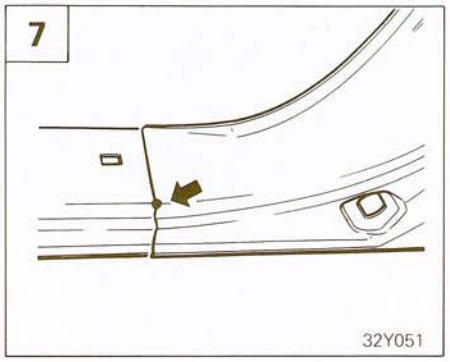

Joint of side sill and quarter pillar

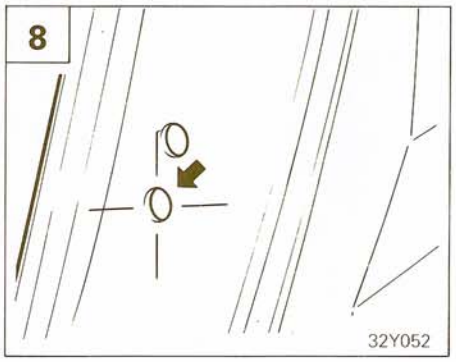

Center of door striker mounting hole [diameter 14 mm (0.55 in.)]

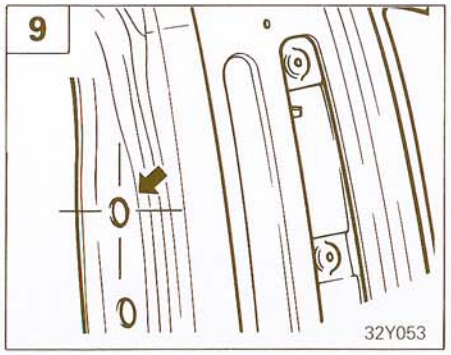

Center of seat belt anchor catch mounting hole [diameter 18 mm (0.71 in.)]

FUEL SYSTEM

CONTENTS

AUTOMATIC SPEED CONTROL (ASC) SYSTEM **90**
ENGINE CONTROL **142**
INSPECTION **137**
Checking Circuit and Individual Parts 137
OUTLINE **90**
Automatic Speed Control Configuration 90
Construction and Operation Actuator 92
SERVICE ADJUSTMENT PROCEDURES **134**
Adjustment of Kickdown Switch 135
Adjustment of Speed Control Cable 134
Inspection and Adjustment of Accelerator Cable Free Play 134
Speed Control System Check 135
SPECIFICATIONS **103**
General Specifications 103
Lubricant 104
Sealants and Adhesives 104
Service Specifications 104
TROUBLESHOOTING **105**
Automatic Speed Control System – Control Section Parts Layout 132
Circuit Diagram 130

FUEL (ECI) SYSTEM **2**
FUEL LINE AND VAPOR LINE **88**
FUEL PUMP **85**
FUEL TANK **86**
GENERAL INFORMATION **2**
INJECTION MIXER **78**
INSPECTION OF ECI SYSTEM **42**
Cautions on Inspection 42
Check Procedure (Self-diagnosis) 61
Circuit Diagrams 43
Component Layout and Vacuum Hose Pipings 55
ECU Connector Removal and Installation 64
Inspection of Control System Operation 63
Inspection of ECI System Components 70
Inspection of ECU Electric Input and Output Signals 64
SERVICE ADJUSTMENT PROCEDURES **33**
Appearance of Injection Mixer 33
Fuel Filter Replacement 38
Fuel Pump Operation Check 39
Idle Speed Check Procedure 34
Idle Speed Control (ISC) and Throttle Position Sensor (TPS) Adjustment 34
Inspection of Distributor Advance Control Vacuum (D Vacuum) 36
Inspection of EGR Valve Control Vacuum (E Vacuum) 37
Inspection of Secondary Air Control Vacuum (M Vacuum) 37
Inspection of Fuel Pressure Regulator 37
Inspection of ISC Servo 37
Inspection of Injector 37
Inspection of Throttle Position Sensor 37
In-tank Fuel Filter Replacement 38
Measurement of Fuel Pressure 39
Overfill Limiter (Two-way Valve) Replacement 38
Release Residual Pressure from Fuel High Pressure Hose 39
Vacuum Control 134
SPECIAL TOOLS **26**
SPECIFICATIONS **23**
General Specifications 23
Sealants and Adhesives 25
Service Specifications 24
Torque Specifications 25
TECHNICAL DESCRIPTION **5**
Components of ECI System 5
Operation of ECI System 13
Self-diagnosis 21
TROUBLESHOOTING **27**
Control Function Table 31
Fuel Tank and Fuel Line 30

GENERAL INFORMATION

N14BA- -

The ECI (Electronic Controlled Injection)-Turbo System provides optimum air-fuel ratio control by judging the engine operating state with its electronic control unit (ECU) based on various sensor input signals and accordingly controlling the injectors installed on the injection mixer. The ECU also performs the idle spee ignition timing, and other controls.

ECI SYSTEM DIAGRAM – VEHICLES WITHOUT INTERCOOLER

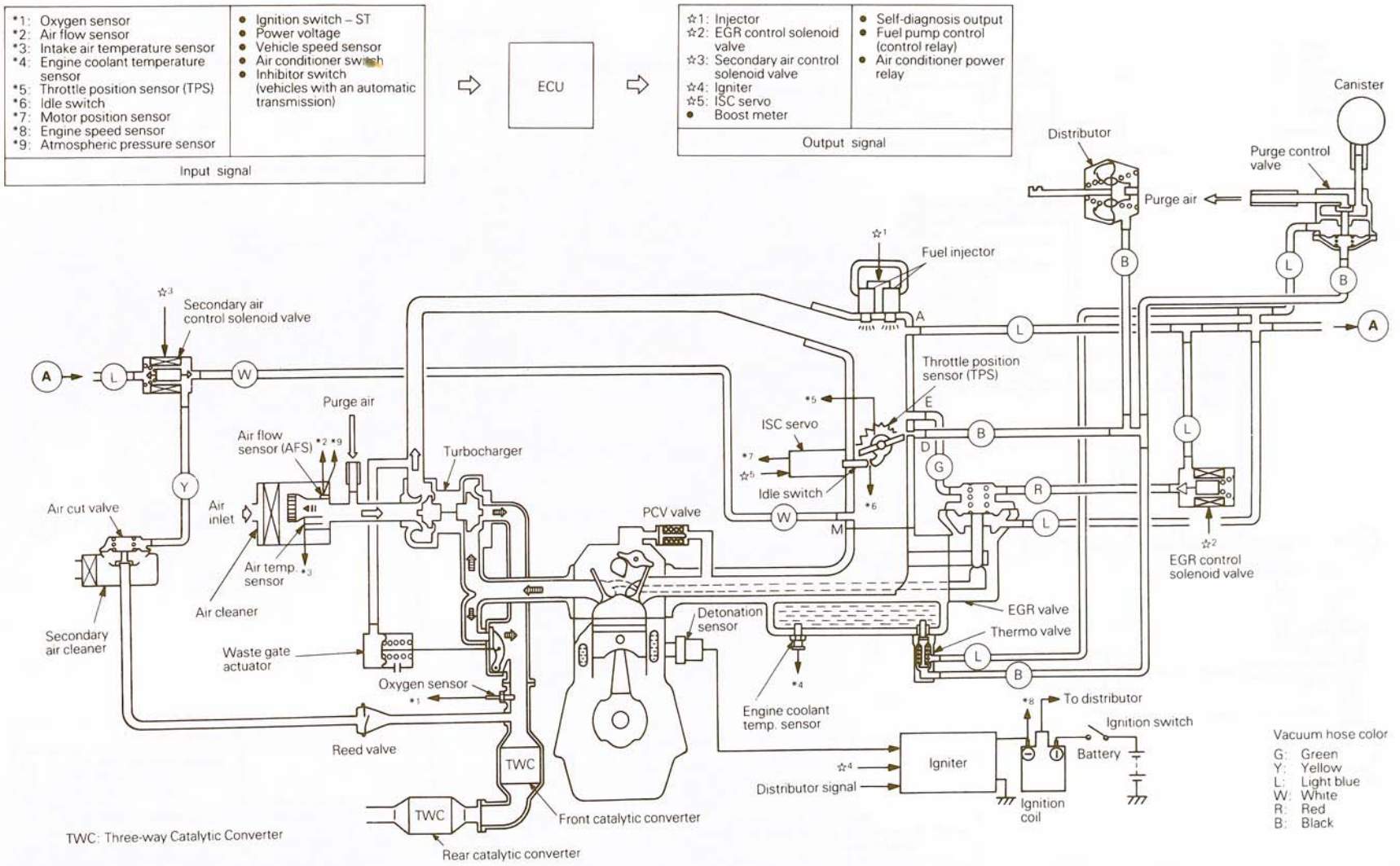

ECI662

ECI SYSTEM DIAGRAM – VEHICLES WITH INTERCOOLER

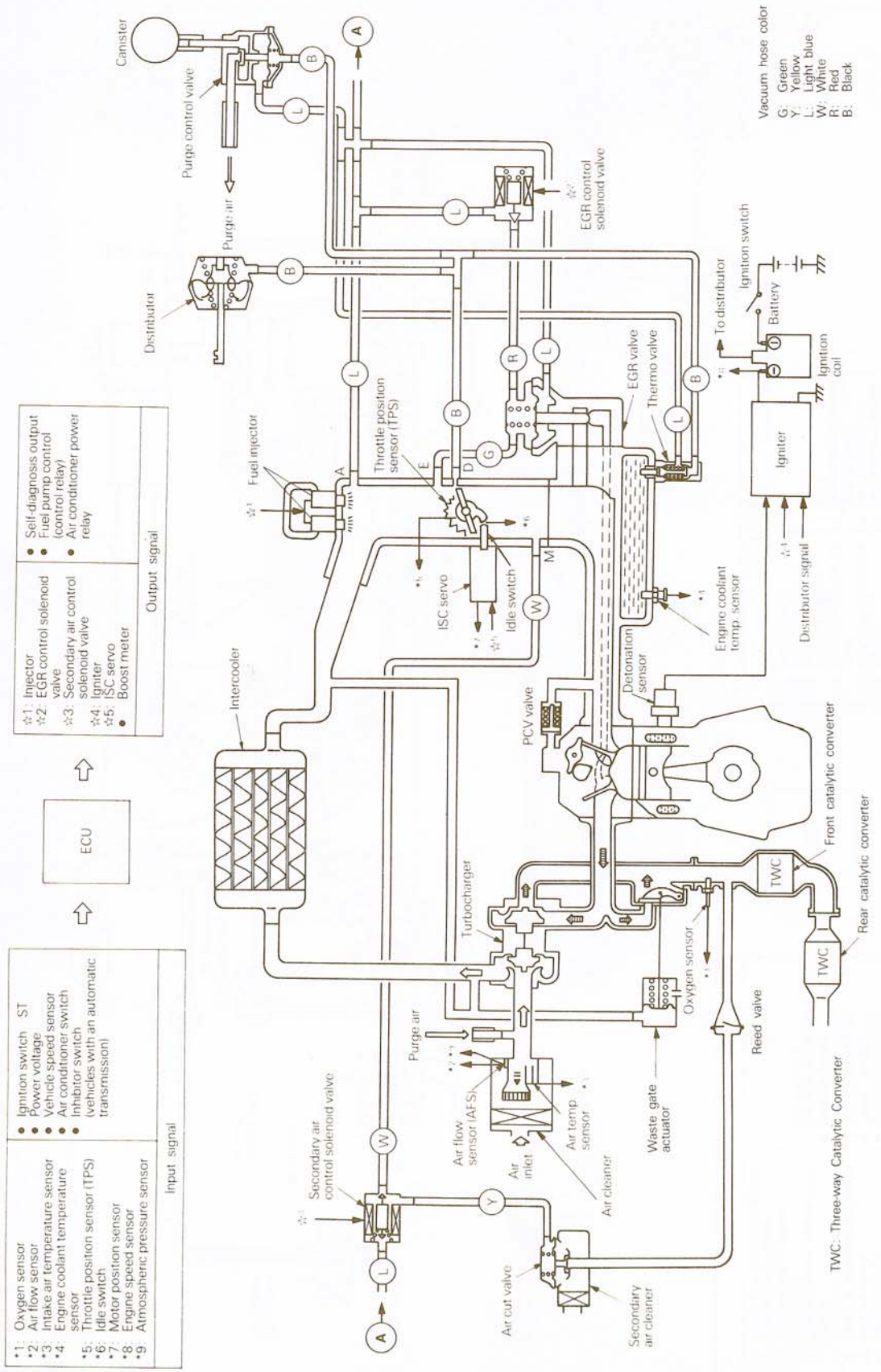

STB Revision

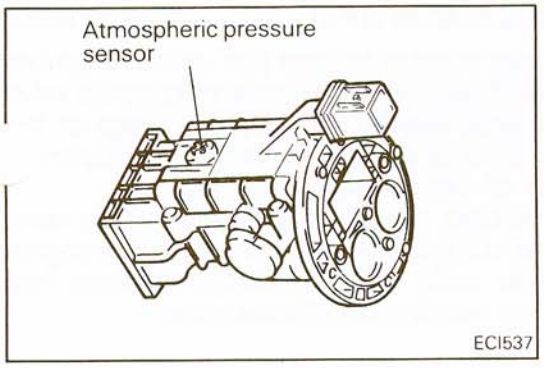

TECHNICAL DESCRIPTION N14BBCA

COMPONENTS OF ECI SYSTEM

AIR FLOW SENSOR (AFS)

The AFS measures the intake air volume. It makes use of Karman vortex to detect the air flow rate and sends it to the ECU as the intake air volume signal.
The ECU uses this intake air volume signal to decide the basic fuel injection duration.

ATMOSPHERIC PRESSURE SENSOR N14BBDA

The atmospheric pressure sensor installed on the AFS senses the atmospheric pressure and converts it into a voltage which is sent to the ECU.
The ECU uses this signal to compute the altitude at which the vehicle is running and corrects accordingly the air-fuel ratio to the optimum and also corrects the ignition timing, thus improving driveability at high altitude.

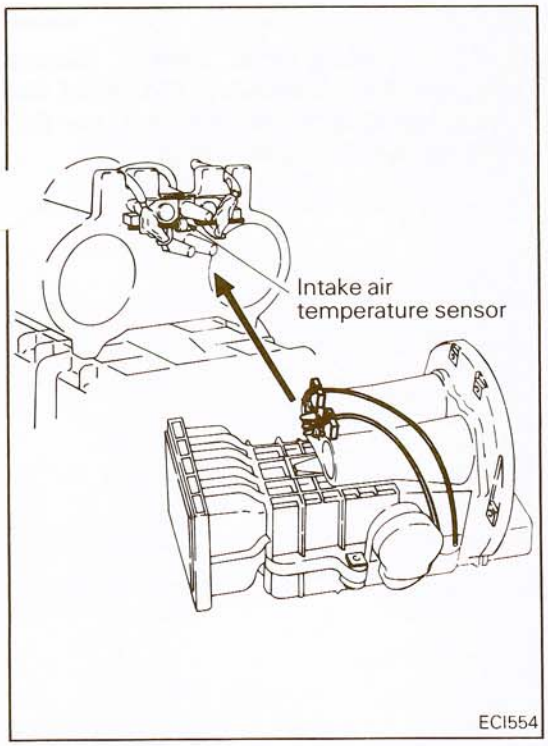

INTAKE AIR TEMPERATURE SENSOR N14BBEA

The intake air temperature sensor, located at the illustrated position on AFS, is a resistor-based sensor for detecting the intake air temperature.
According to the intake air temperature information from the sensor, the ECU provides necessary fuel injection amount control.

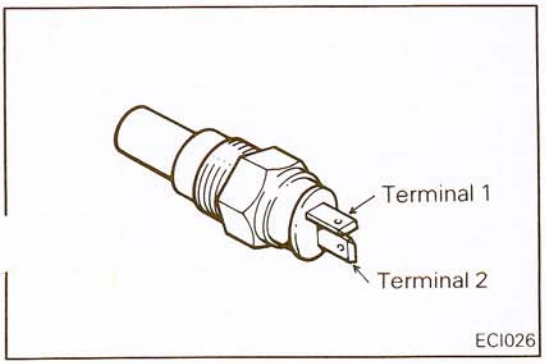

ENGINE COOLANT TEMPERATURE SENSOR N14BBAA

The engine coolant temperature sensor installed in the engine coolant passage of the intake manifold is a resistor-based sensor. The ECU judges engine warm-up state by the sensor output voltage and provides optimum fuel enrichment when the engine is cold.

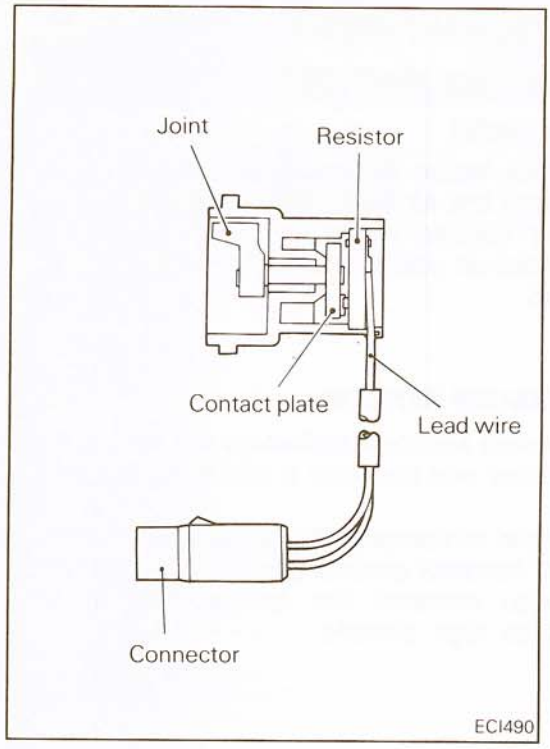

THROTTLE POSITION SENSOR (TPS) N14BBBB

The TPS is a rotating type variable resistor that rotates together with the injection mixer throttle shaft to sense the throttle valve angle. As the throttle shaft rotates, the output voltage of the TPS changes and the ECU detects the throttle valve openi based on the change of the voltage.
Based on this output voltage, the ECU computes throttle valve opening change (output voltage change) and judges the engine acceleration/deceleration state and accordingly corrects fuel injection amount during acceleration/deceleration.

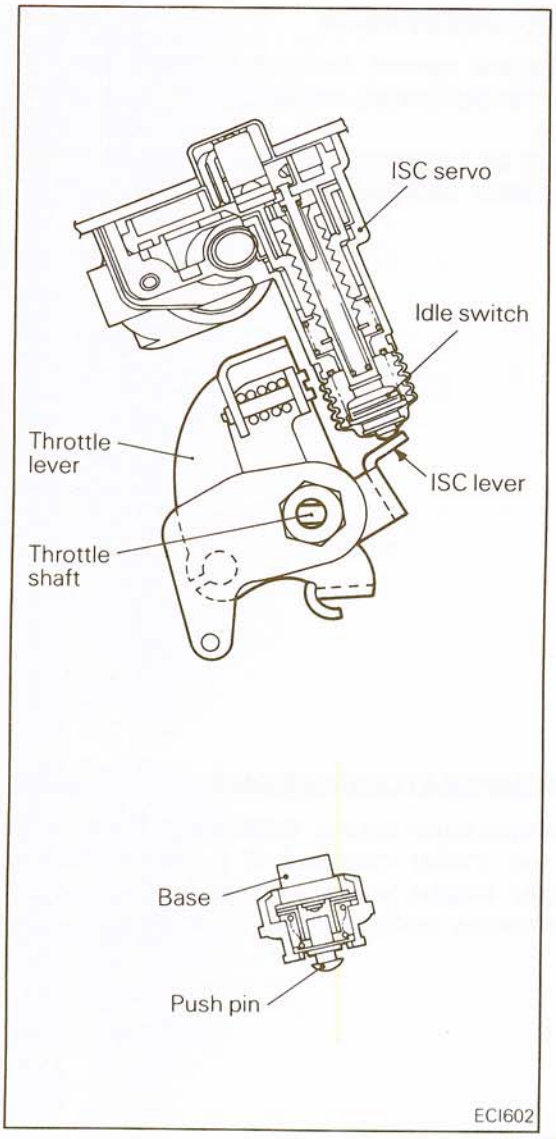

IDLE SWITCH N14BBFA

The idle switch, which is a contact type switch, senses accelerator operation. The switch is installed at the tip of the ISC servo. When the throttle valve is at idle opening, the ISC lever pushes the push pin to turn on the contact.

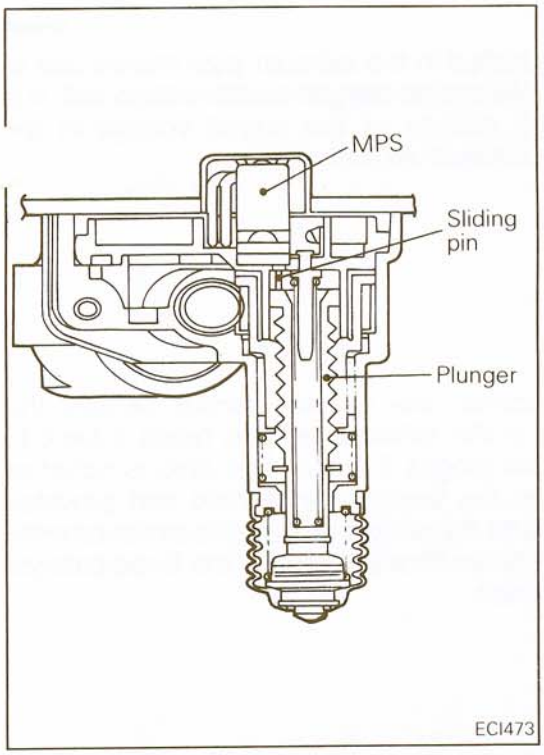

MOTOR POSITION SENSOR (MPS) N14BBGA

The MPS, a variable resistor type sensor, is installed in the ISC servo. Its sliding pin is in contact with the plunger end and as the plunger moves, the internal resistance of the MPS changes (namely, the output voltage changes).
The MPS senses the ISC servo plunger position and sends the signal to the ECU.
The ECU controls the valve opening, and consequently the idle speed by using the MPS signal, idle signal, engine coolant temperature signal, load signals (automatic transmission and air conditioner) and vehicle speed signal.

ENGINE SPEED SENSOR (IGNITION COIL NEGATIVE TERMINAL VOLTAGE SENSOR) N14BBHB

The ignition coil negative terminal voltage makes sudden increase twice per engine revolution synchronously with ignition timing.
By sensing this ignition coil negative terminal voltage change and measuring the time between peak voltages, the ECU computes the engine speed, judges the engine operating mode and controls the air-fuel ratio and idle speed.

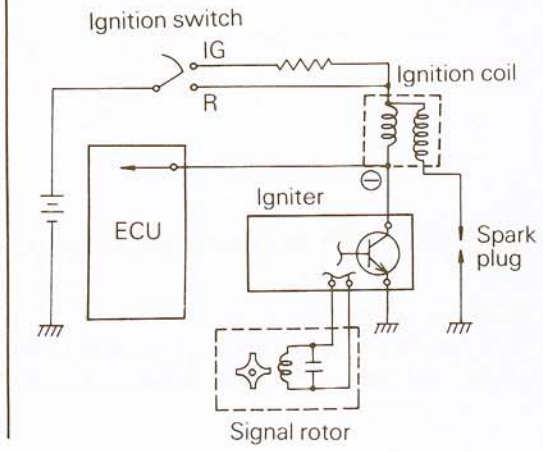

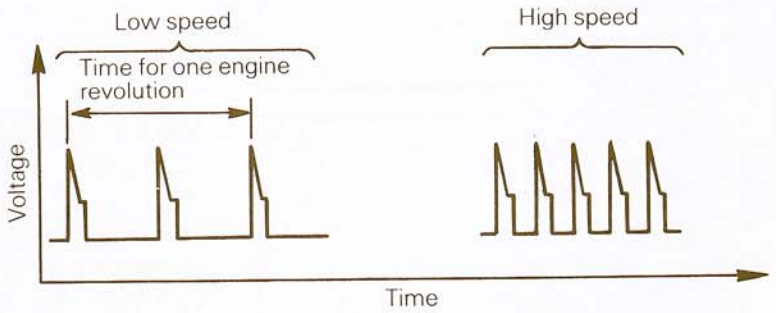

ECI731 01Z511

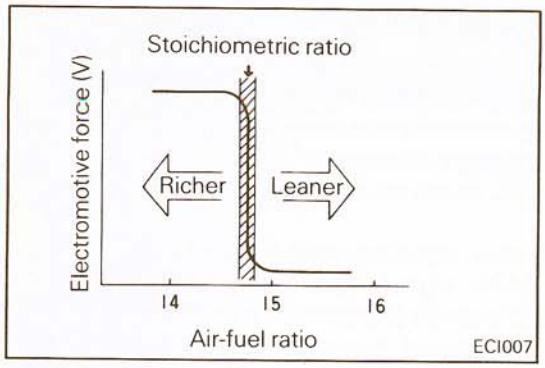

OXYGEN SENSOR

N14BBIB

The oxygen sensor installed in the exhaust pipe makes use of the principles of solid electrolyte oxygen concentration cell. It is characterized by sharp change of the output voltage in the vicinity of the stoichiometric air-fuel ratio.

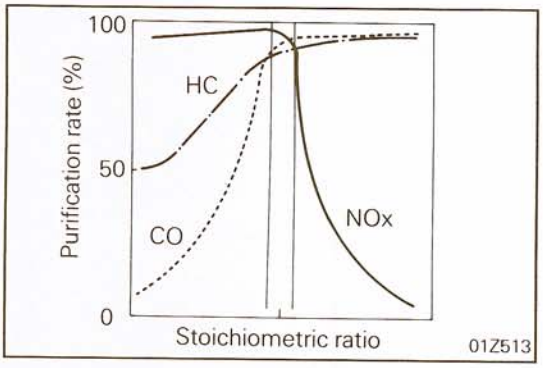

Using such characteristics, the oxygen sensor senses the oxygen concentration in the exhaust gas and feeds it back to the ECU. The ECU then judges if the air-fuel ratio is richer or leaner as compared to the stoichiometric ratio and provides feedback control to adjust the air-fuel ratio to the stoichiometric ratio where the emission purification rate of the three-catalyst converter is the optimum.

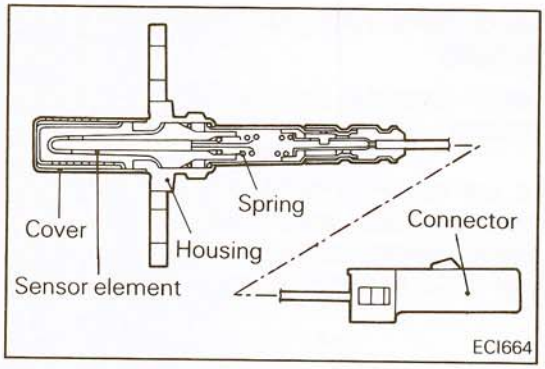

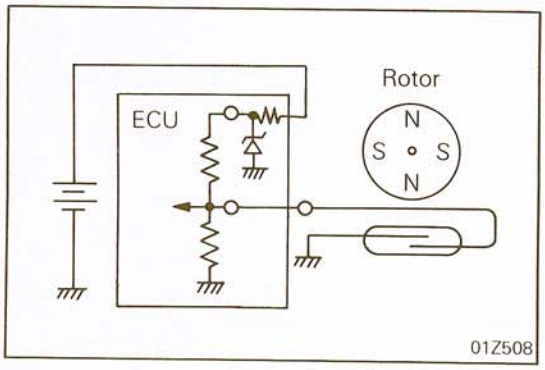

VEHICLE SPEED SENSOR

N14BBJA

The vehicle speed sensor uses a reed switch. The speed sensor built in the speedometer converts the transmission speedometer gear revolution (vehicle speed) into pulse signals, which are sent to the ECU.

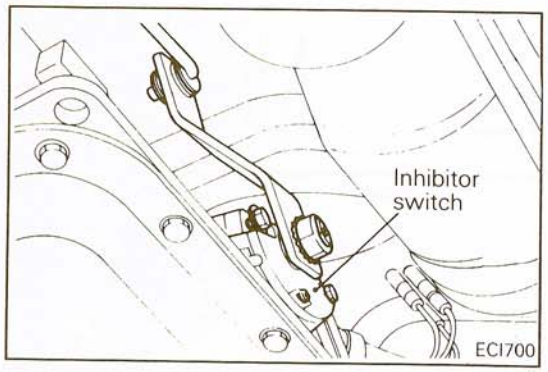

INHIBITOR SWITCH – Vehicles with an Automatic Transmission

N14BBMB

This switch detects whether the select lever is currently positioned at N or P. Based on this signal, the ECU senses the automatic transmission load and drives the ISC servo to keep optimum idle speed.

STB Revision

AIR CONDITIONER SWITCH

N14BBNA

When the air conditioner is turned on, the air conditioner ON signal is sent to the ECU. Based on this signal, the ECU drives the ISC servo to keep optimum idle speed.

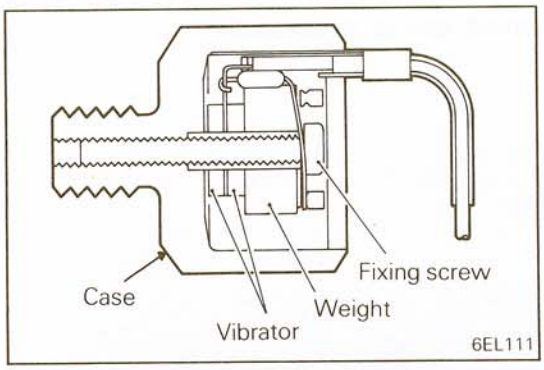

DETONATION SENSOR

N14BBOA

Installed on the cylinder block, the detonation sensor converts vibration into voltage by its piezoelectric element. When detonation occurs, it resonates with cylinder block vibration to generate high voltage which is sent to the igniter as the detonation signal. Based on this signal, the igniter retards the ignition timing to prevent detonation.

INJECTION MIXER ASSEMBLY

N14BCCA

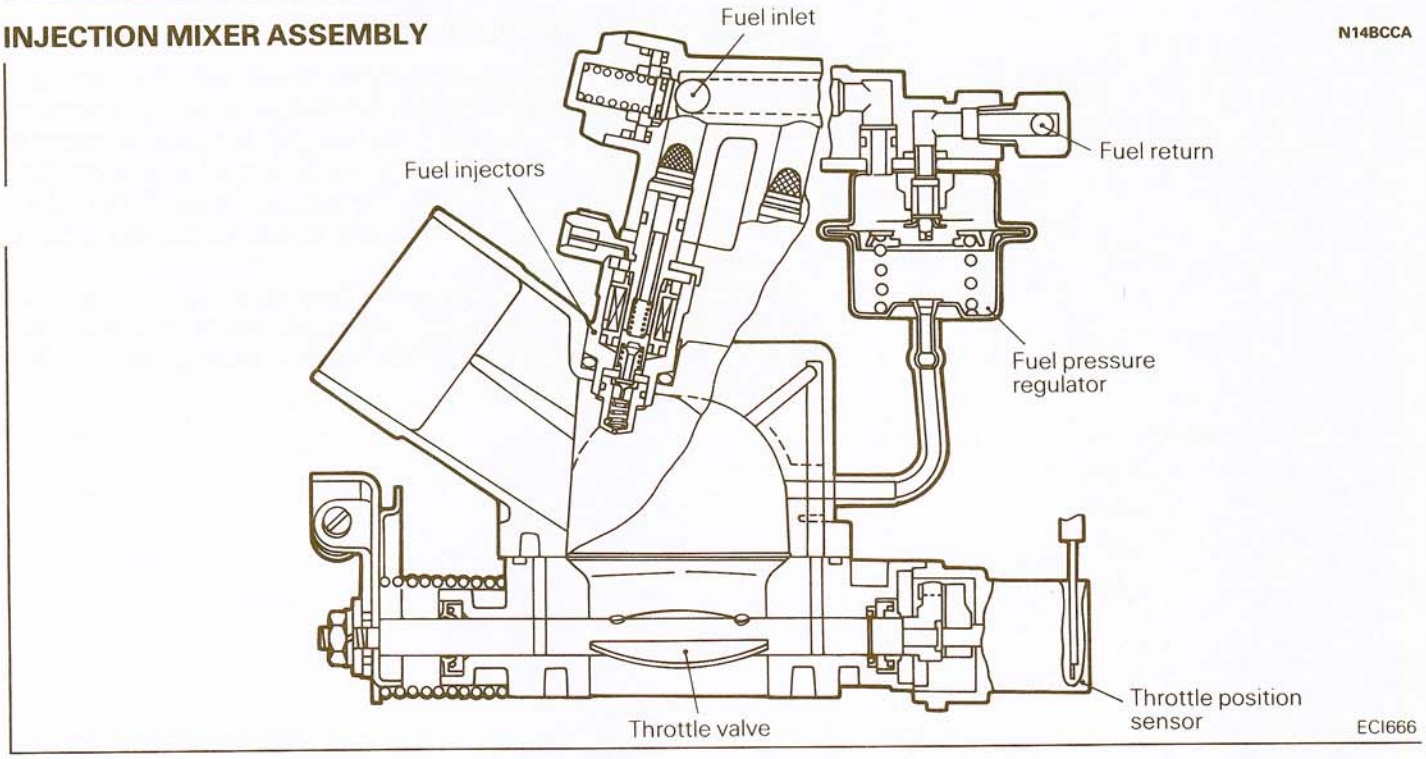

The injection mixer assembly consists of fuel injectors, fuel pressure regulator and throttle valve.

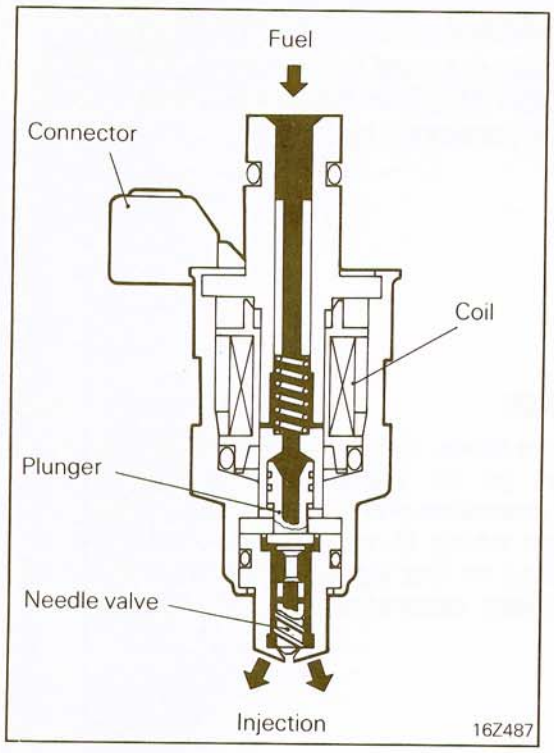

INJECTORS

N14BCDA

The injector, which is an injection nozzle with solenoid valve, injects fuel based on the injection signal from the ECU.
The injectors are installed on the injection mixer and inject fuel upstream of the throttle valve.
When the solenoid coil is energized, the plunger is attracted. The needle valve integral with the plunger is then pulled to the full open position with the plunger and fuel is injected through the valve so opened.
As the injection nozzle opening is fixed and the fuel pressure is also fixed, the injection amount is determined by the duration during which the needle valve is open, namely, by the time during which the solenoid coil is energized.

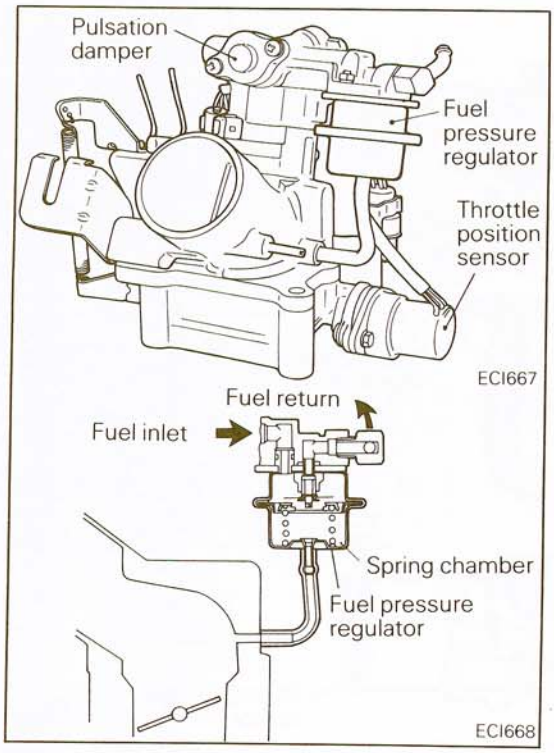

FUEL PRESSURE REGULATOR

N14BCEA

The fuel pressure regulator always keeps the injector fuel pressure at a level 250 kPa (36 psi) higher than the injection mixer inside pressure. By doing so, the fuel injection amount is kept constant even when the mixer inside pressure changes.
The spring chamber is connected by vacuum hose to the mixer nipple so that the mixer inside intake pressure always acts in the spring chamber.
Therefore, when the fuel pressure becomes higher than the spring tension plus intake air pressure in the mixer, the diaphragm is forced up and excess fuel is returned through the return pipe to the fuel tank.

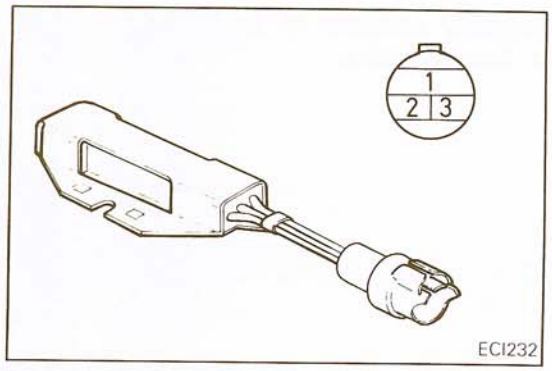

RESISTOR

N14BCFA

The resistor limits the electric current flowing to the injector coil. The injector is required to respond quickly to the fuel injection signal. This fast response is achieved by reducing the number of turns of the injector coil and thus improving current rise when the coil is energized.
This smaller number of turns, however, draws more current and generates more heat. In order to prevent this, a resistor is provided between the power supply (+) and the injector to limit current flowing to the coil.

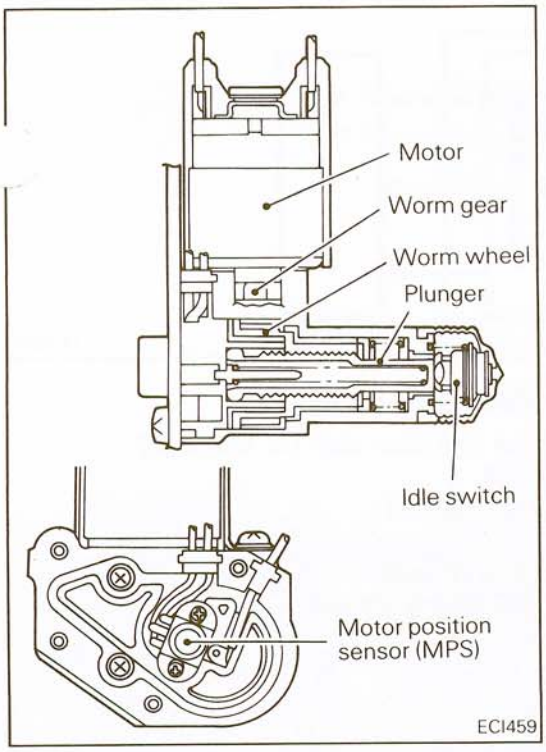

IDLE SPEED CONTROL (ISC) SERVO N14BCGA

The ISC servo consists of a motor, worm gear, worm wheel and plunger.
Also are incorporated the motor position sensor (MPS) to detect plunger position and the idle switch to detect idle position.
The worm gear, installed on the motor shaft, transmits motor rotation to the worm wheel.
The worm wheel is meshed with worm on the plunger so that the plunger extends or retracts as the worm wheel rotates.
As the motor rotates according to the signal from the ECU, the plunger extends or retracts depending on the direction of rotation of the motor to actuate the throttle valve via the ISC lever.
In this way, the idle speed is controlled by adequately changing the throttle valve opening.

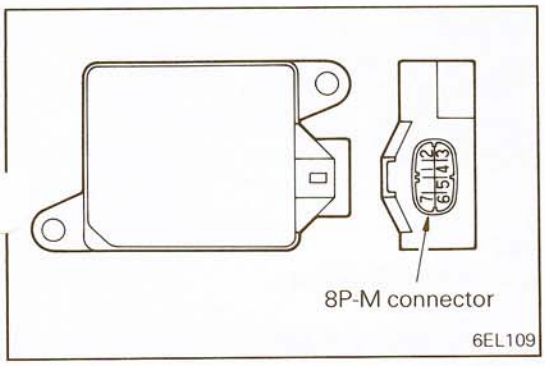

IGNITER N14BCHA

The igniter has the section to judge severity of detonation and the section to control the ignition timing. Based on the signal from the detonation sensor, the igniter judges detonation and controls the ignition timing. The igniter incorporates a fail-safe feature which retards the ignition timing by a fixed angle (except when the engine is at idle) to protect the engine in the event of detonation sensor failure.

CONTROL RELAY AND AIR CONDITIONER POWER RELAY N14BCID

Refer to OPERATION OF ECI SYSTEM, P.14-13.

SECONDARY AIR CONTROL SOLENOID VALVE AND EGR CONTROL SOLENOID VALVE N14BCJB

Refer to GROUP 25 EMISSION CONTROL SYSTEMS.

ELECTRONIC CONTROL UNIT (ECU) N14BDAC

Based on the information from various sensors, the ECU determines (computes) an optimum control for varying operating conditions and accordingly drives the output actuators.
The ECU consists of an 8-bit microprocessor, random access memory (RAM), read only memory (ROM) and input/output (I/O) interface.

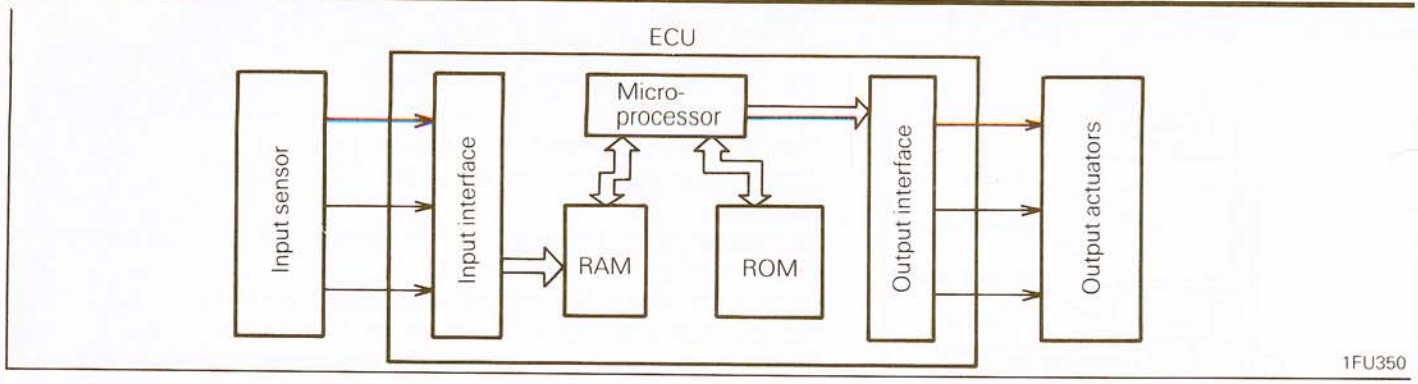

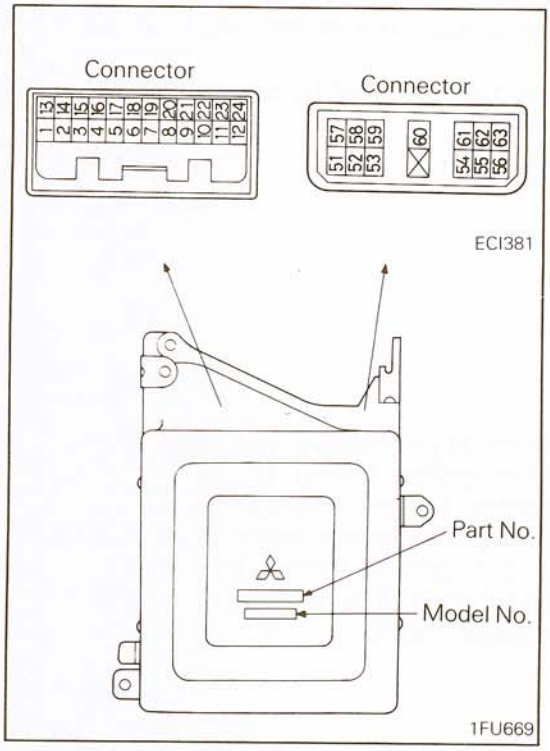

ECU Connector I/O Pin Composition

1: Engine speed sensor [Ignition coil (–) terminal]
2: Air flow sensor (AFS)
3: Motor position sensor (MPS)
4: Sensor GND
5: Intake air temperature sensor
6: Engine coolant temperature sensor
7: Idle switch
8: –
9: –
10: Sensor power
11: Oxygen sensor
12: ISC servo (for retraction)
13: Igniter – advance control signal
14: Sensor power – MPS backup
15: Throttle position sensor (TPS)
16: Atmospheric pressure sensor
17: –
18: –
19: Vehicle speed sensor
20: Secondary air control solenoid valve
21: Diagnosis output
22: Control relay (fuel pump relay control)
23: ISC servo (for extension)
24: Air conditioner power relay

51: Power
52: GND
53: GND
54: EGR control solenoid valve
55: Ignition switch – ST terminal (start signal)
56: Air conditioner switch (air conditioner signal)
57: Power
58: Inhibitor switch
59: Boost meter
60: Injector, small orifice
61: Igniter – detonation control signal
62: Injector, large orifice
63: Backup power

OPERATION OF ECI SYSTEM

N14BEBC

AIR-FUEL RATIO CONTROL SYSTEM

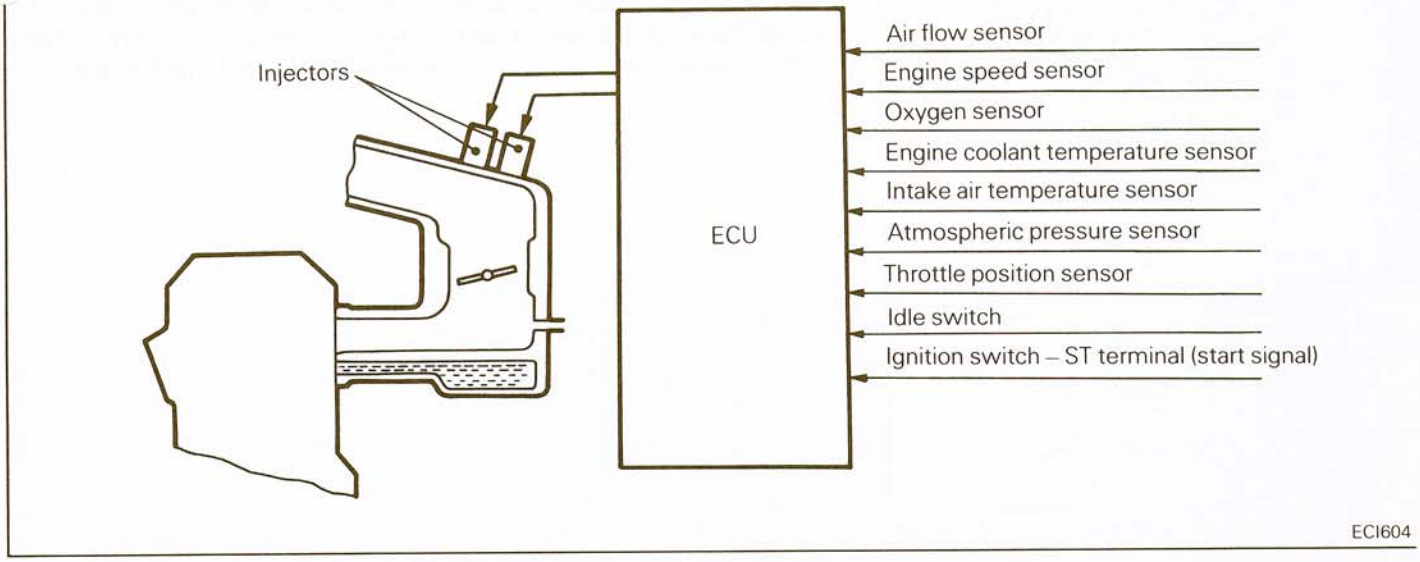

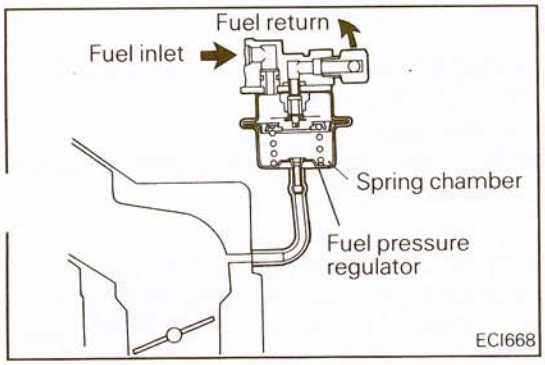

The air-fuel ratio control is achieved by controlling the driving time of two injectors installed to the injection mixer.
After passing through the in-tank filter, fuel is force-fed by the in-tank fuel pump so as to be sent to the two injectors on the injection mixer through the main pipe and fuel filter.
The fuel pressure applied to the injector is maintained at a fixed level by the fuel pressure regulator so that it may be 250 kPa (36.26 psi) higher than the internal pressure of the injection mixer where fuel injection takes place. After pressure regulation, excess fuel is returned to the fuel tank through the return hose. When the injector is energized, the valve inside the injector opens fully to inject the fuel.
Since the fuel pressure is kept at a fixed level, supply of fuel injected from the injectors into the injection mixer varies with the energizing time.

FUEL INJECTION CONTROL

The amount of fuel injection is basically determined by the air flow sensor (AFS) output frequency corresponding to the amount of intake air.
With the increase of air flow sensor output frequency, the amount of fuel injection increases and as the air flow sensor output frequency decreases, the amount of fuel injection decreases.
When the air flow sensor is in trouble, the backup control is made by driving the injectors by means of engine speed sensor signal.

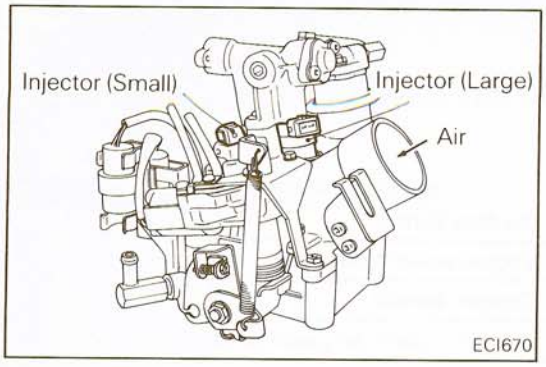

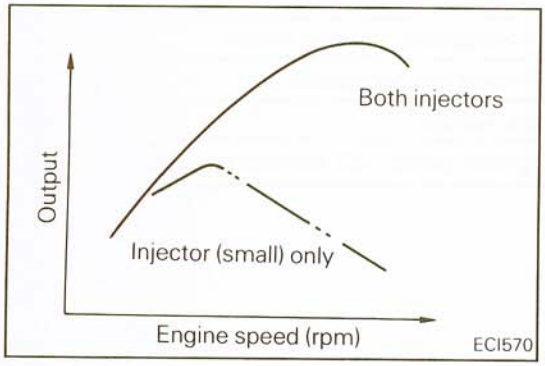

Injector Drive Range

In the range where the amount of intake air is small, only the small flow type injector with a small orifice is driven and the fuel injection intervals are reduced to inject fuel continuously for improvement of idling stability.
In the range where the amount of intake air is large, both the large flow type injector with large orifice and the small flow type injector are driven to provide sufficient fuel supply.

Injector Drive (Fuel Injection) Timing

(1) Fixed injection
When starting (cranking) the engine, only small injector is driven at a cycle of 13.3 Hz.
(2) Karman synchronous injection
After starting the engine, the injectors are driven synchronously with air flow sensor signal.

NOTE
If the injector driving time is constant, air flow sensor output frequency increases with the amount of intake air and accordingly the number of injector driving time also increases. Therefore, air-fuel ratio is maintained at a fixed level.

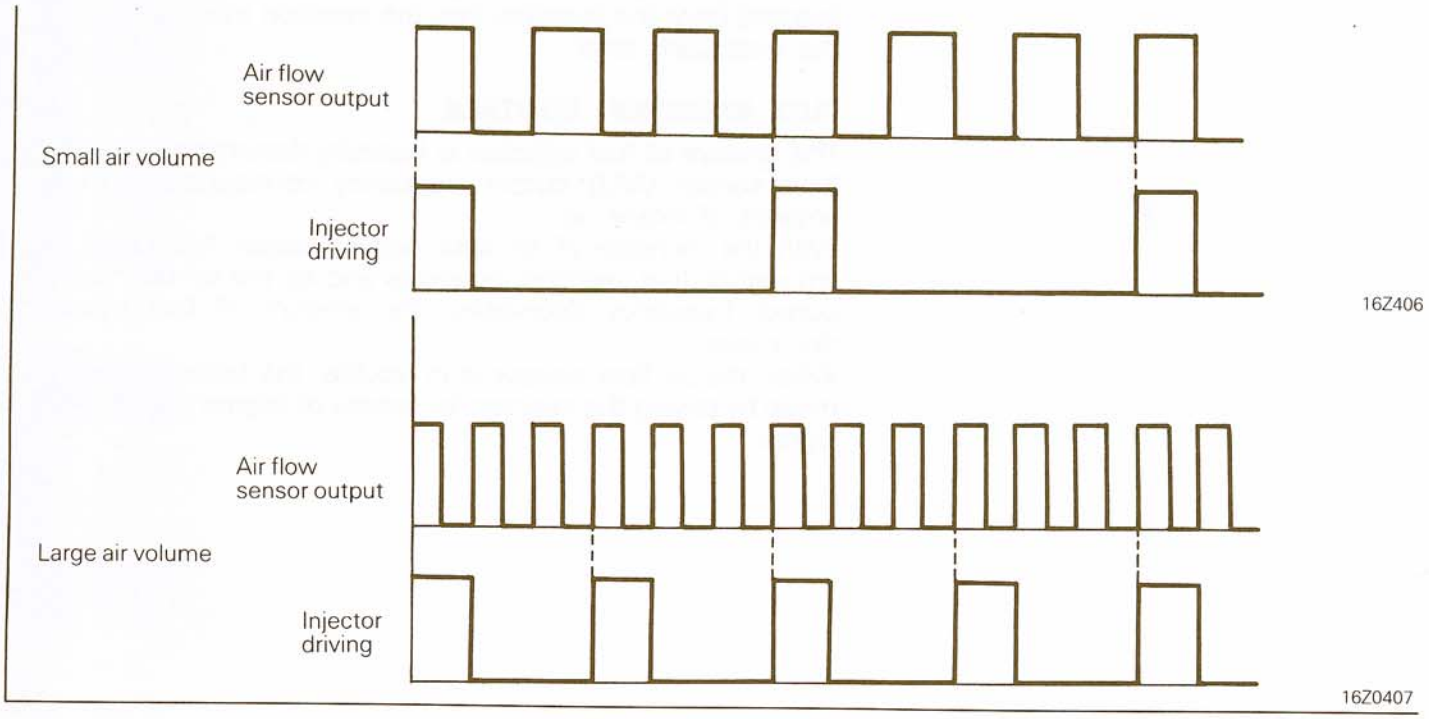

STB Revision

Injector Driving Time

The injector driving time (amount of fuel injection) at which the air-fuel ratio for the amount of intake air reaches stoichiometric air-fuel ratio is called basic driving time and is stored in the memory of ECU in advance.
When starting (cranking) the engine, the map value* determined by the engine coolant temperature sensor signal is used as the basic driving time.
During the deceleration, the basic driving time is set as zero.

* Map value: The map value is a value set in advance and stored in the ROM inside the ECU.

The injector driving time is obtained by making the following corrections on the above-mentioned basic driving time.

- Oxygen sensor feedback correction (Closed loop control correction)

  In normal operation (excluding idling*) after engine warming up, air-fuel ratio is corrected to stoichiometric air-fuel ratio by using oxygen sensor signals. The three-way catalytic converter gives best degree of purification at stoichiometric air-fuel ratio.

  * Excluding idling: A correction factor for oxygen sensor feedback operation has been stored in advance and during idling, this factor is applied for correction on the rich side to increase the air-fuel ratio over the stoichiometric ratio, thus improving the idle stability. During idling, secondary air is supplied from the reed valve to reduce emissions (CO and HC).

- Air-fuel ratio map correction (Open loop control correction)

  During engine warming up and heavy load operation, correction to the optimum air-fuel ratio is made by the map values set by engine speed and amount of intake air.

- Engine coolant temperature correction

  To maintain operability of cold engine, correction is so made that the lower the engine coolant, the more the amount of fuel injection.

- Intake air temperature correction

  Change in air-fuel ratio due to difference in intake air density caused by intake air temperature is corrected.

- Atmospheric pressure correction

  Change in air-fuel ratio due to difference in intake air density caused by change in atmospheric pressure is corrected.

- Acceleration/deceleration correction

  In accordance with change in opening of throttle valve, fuel amount is corrected, improving operability at acceleration and deceleration.

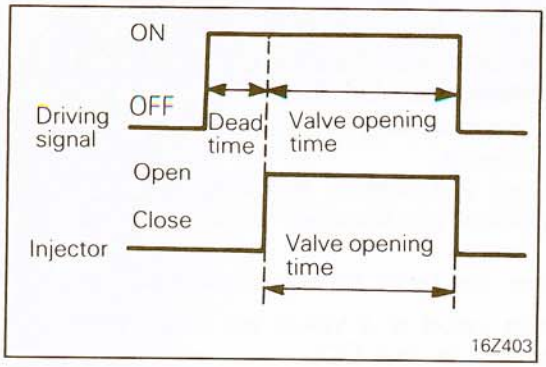

- Dead time correction

The injectors opened by the driving signal from ECU have operational lag which changes according to difference due to battery voltage. This means that actual injector valve opening time becomes less than injector driving signal failing to provide expected air-fuel ratio.

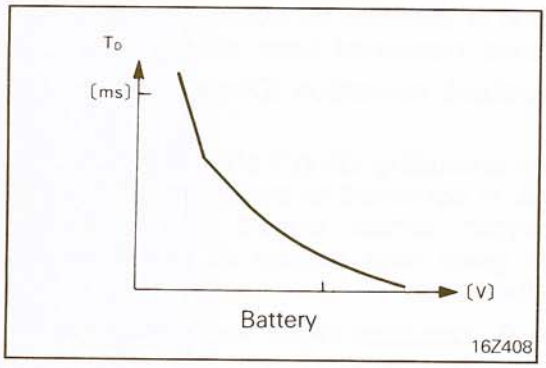

Therefore, battery correction time corresponding to the battery voltage is added.

IGNITION TIMING CONTROL SYSTEM

N14BFBA

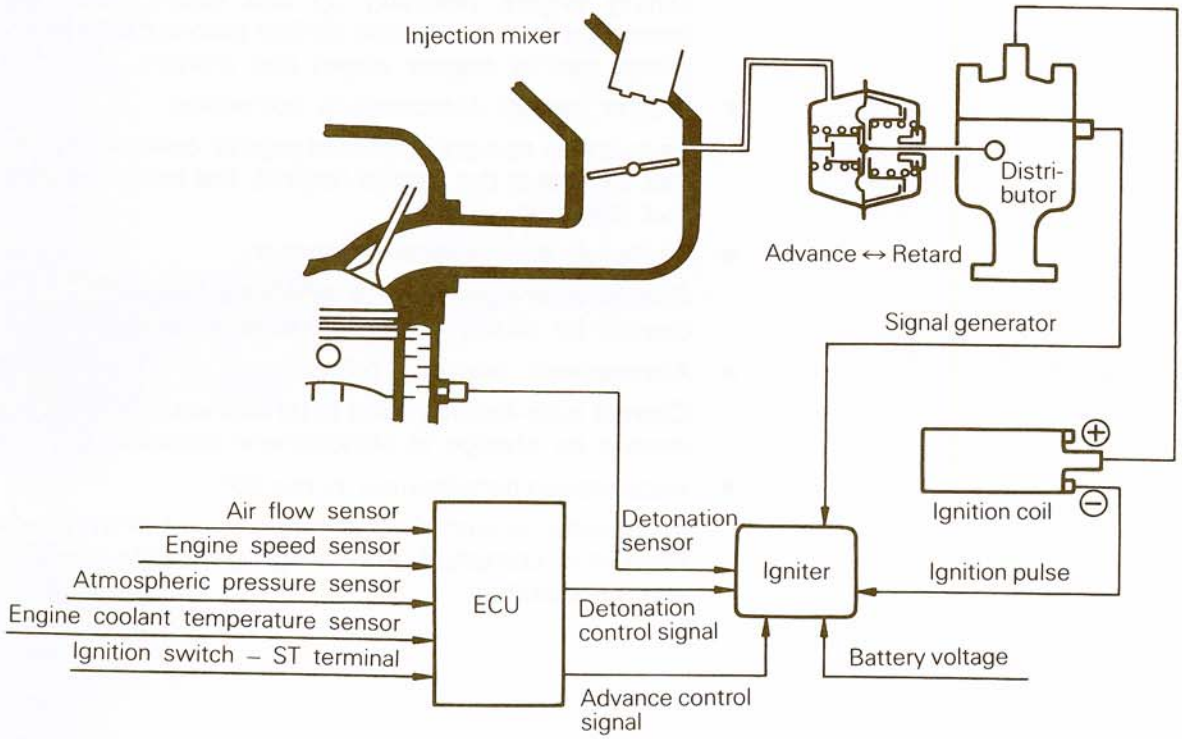

ECI605

The ignition timing control system provides the following two types of control.

Detonation Control

When detonation control signal is applied to the igniter from the ECU, the igniter retards the ignition timing to such an extent that detonation is eliminated (max. 12° in crank angle).
Should the harness from the detonation sensor have an open or short circuit, the igniter retards the ignition timing by a fixed angle (approx. 8° in crank angle) to prevent detonation (fail-safe feature).

Cold and High Altitude Timing Control

When the engine coolant temperature is low [approx. 35°C (95°F) or lower] or the vehicle is driving at altitude 1,200 m (3,937 ft.) or higher [atmospheric pressure 88 kPa (12.8 psi) or lower], the system causes the ignition timing to advance a fixed angle (approx. 5° in crank angle) to improve mileage and driveability.

IDLE SPEED CONTROL (ISC) SYSTEM

N14BGAA

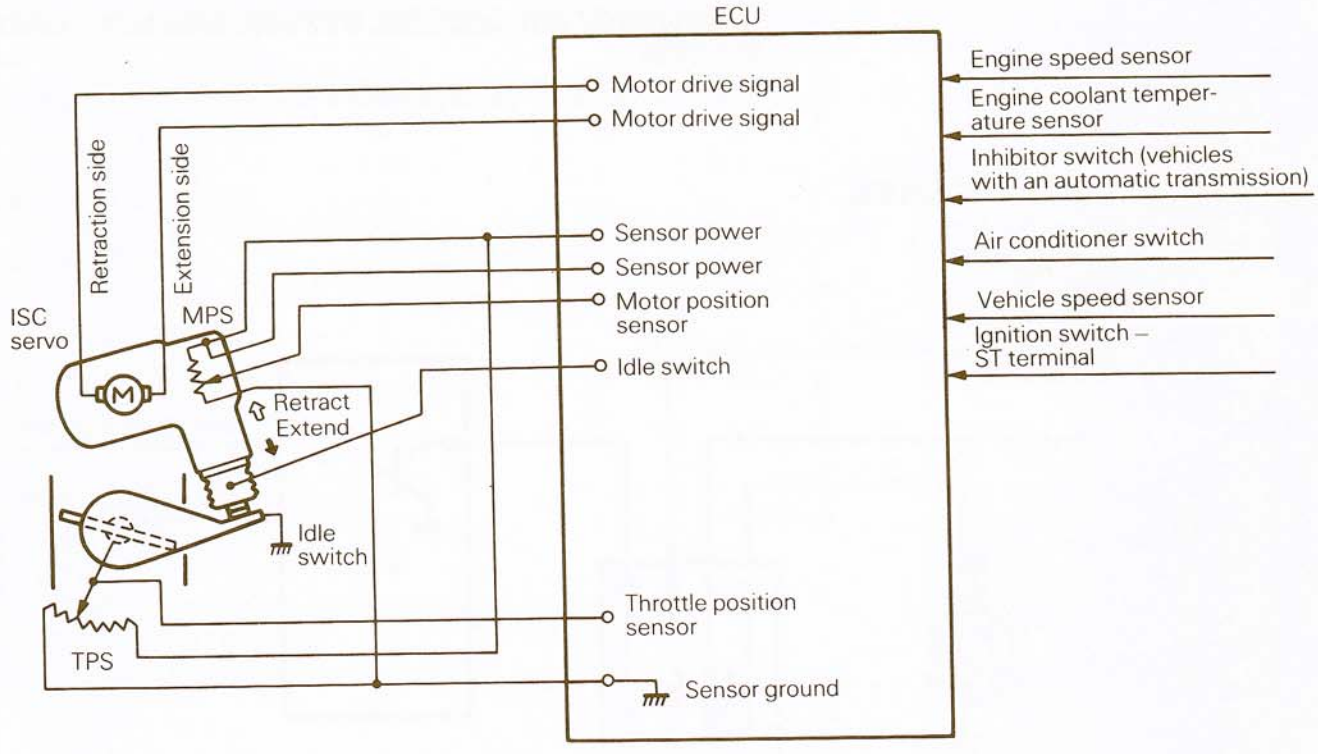

ECI606

The ISC system provides the following four modes of control.

Start Control

The throttle valve opening is controlled to optimum position for start according to the engine coolant temperature.

Fast Idle Control

(1) When the idle switch is on, the engine speed is controlled to a target rpm according to the engine coolant temperature (rpm feedback control).
(2) When the idle switch is off, the ISC servo is actuated to move the throttle valve to a target opening position according to the engine coolant temperature (target opening control).

Idle Control

(1) When the air conditioner switch is turned on or when the transmission is shifted from N to D (vehicles with an automatic transmission), the system causes the idle speed to increase to the target rpm according to the load (rpm feedback control).
(2) When the electrical load changes in such an occasion as turning on the air conditioner, there is some time lag before the rpm feedback control becomes effective. During that period, a control to adjust to the target rpm (throttle valve opening) works to prevent engine speed drop (target throttle valve opening control).

Dash Pot Control

The system provides dash pot control according to deceleration conditions to alleviate shock at deceleration.

SECONDARY AIR CONTROL SYSTEM AND EGR CONTROL SYSTEM

N14BHBA

Refer to GROUP 25 EMISSION CONTROL SYSTEMS.

AIR CONDITIONER RELAY CONTROL

N14BKBA

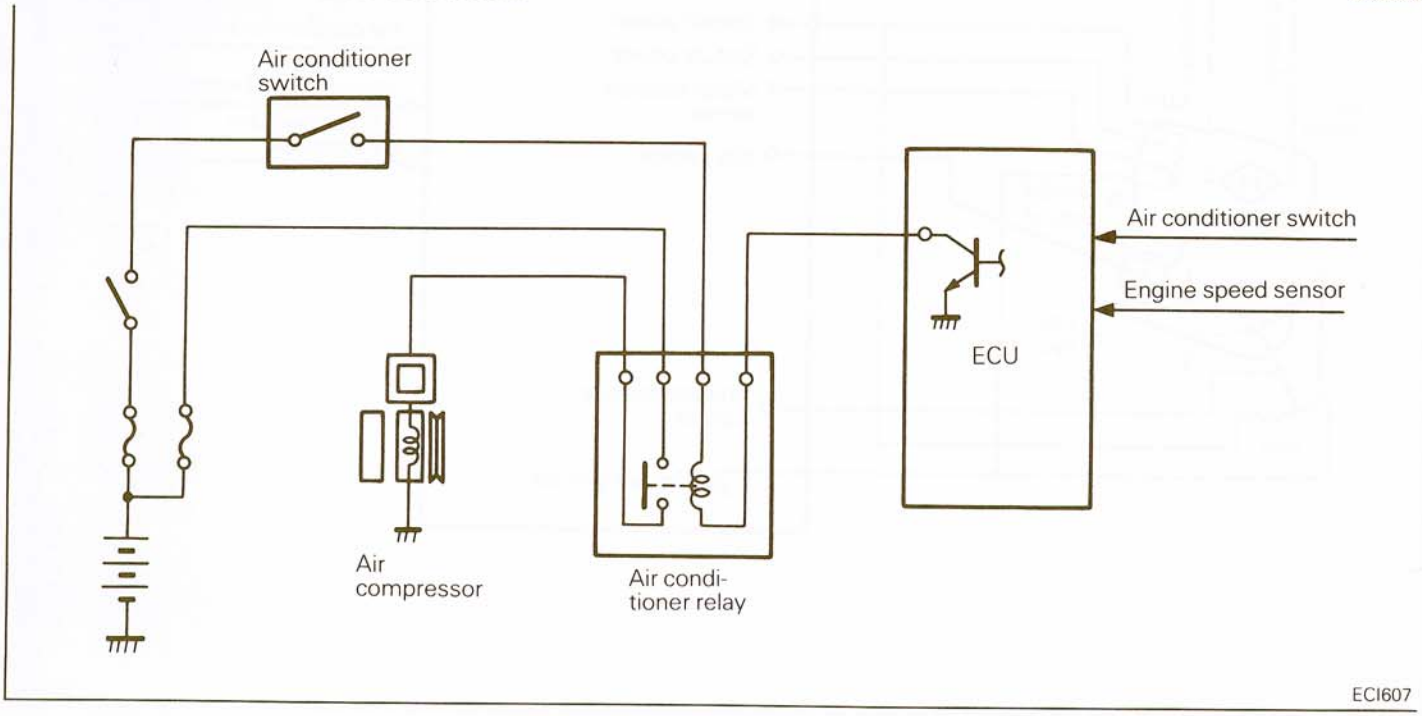

ECI607

STB Revision

When the air conditioner switch is turned on while the engine is at idle, the ISC servo operates to increase the engine speed. However, there is some delay before the engine speed actually increases. To maintain the engine free from the air conditioner load during that delay period, the ECU keeps the power transistor off for a fixed time (about 0.5 second) to open the air conditioner power relay circuit. As a result, even if the air conditioner switch is on, the air compressor is not driven instantly, preventing engine speed drop due to compressor load.

BOOST METER CONTROL

N14BNAA

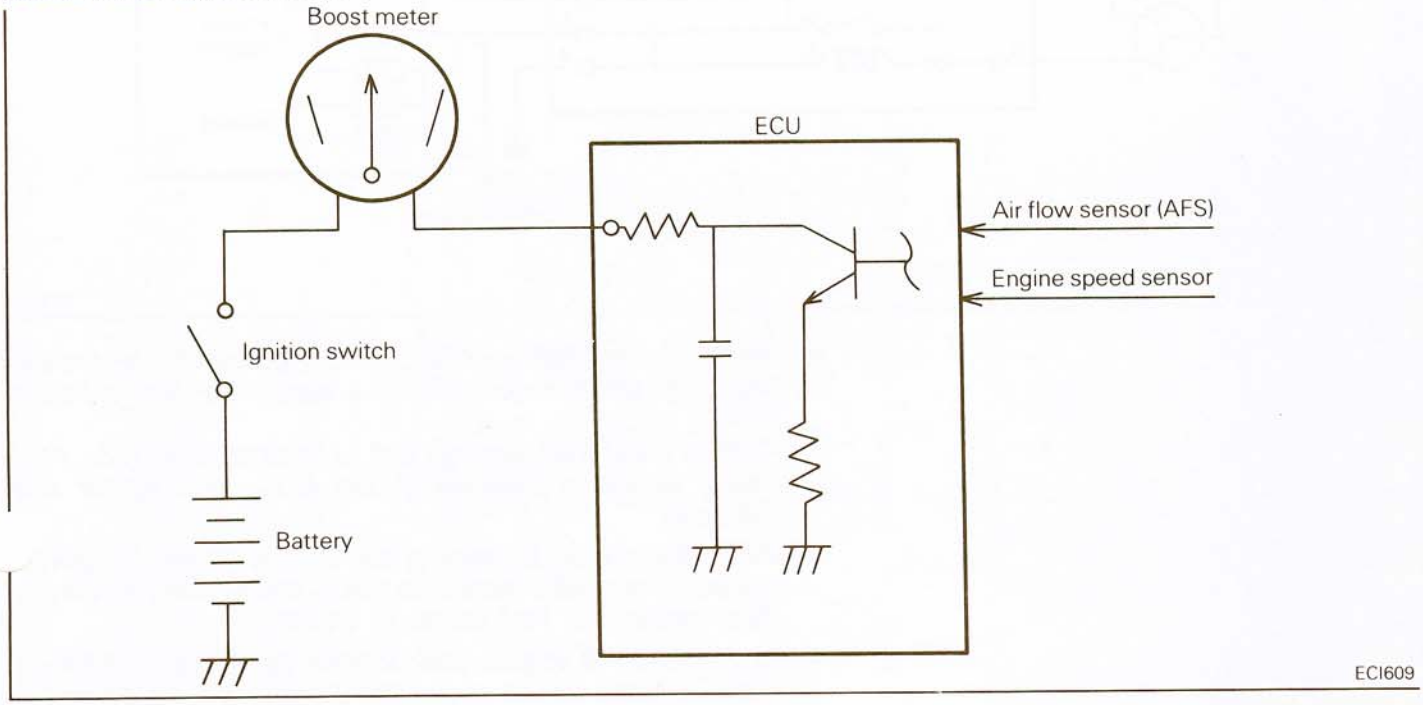

The boost meter is basically an ammeter. Based on the intake air volume signal from the air flow sensor (AFS) and the engine speed signal from the engine speed sensor, the ECU computes the load and determines the duty ratio accordingly and drives the boost meter.

Load α: intake air volume/rpm

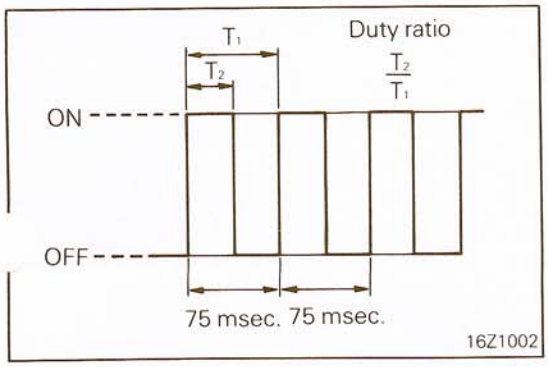

NOTE
The duty ratio is the ON duration ratio of 13.3 Hz pulse or T_2/T_1. The higher the duty ratio, the more mean current flows to the boost meter, and as a result, the boost meter reads the higher value.
The smaller is the duty ratio, the boost meter reads the smaller value.

STB Revision

POWER SUPPLY AND FUEL PUMP CONTROL

N14B0AA

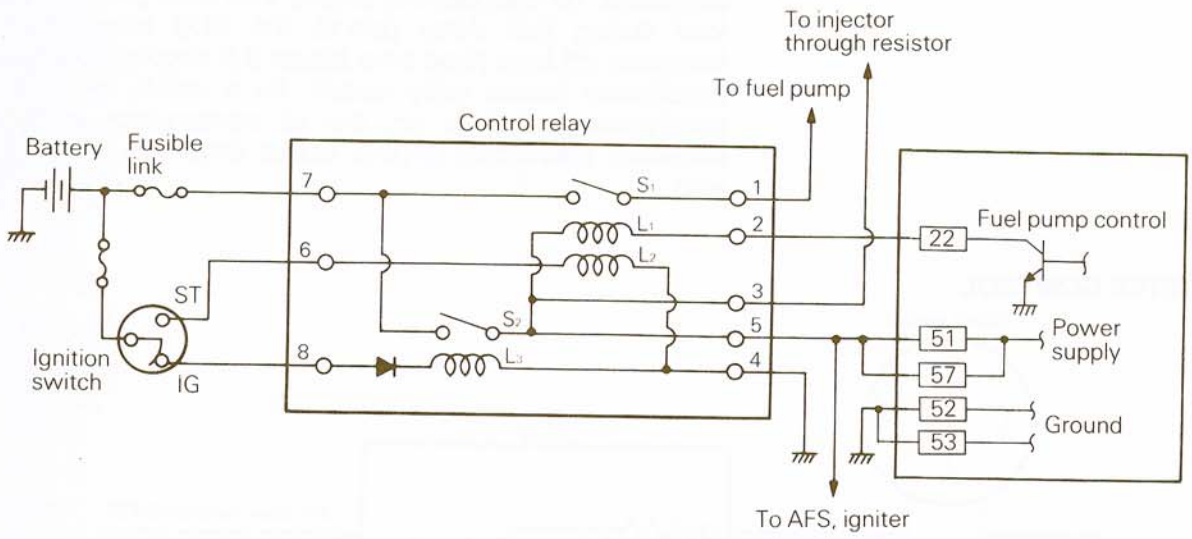

ECI544

- While cranking (ignition switch at ST), current flows through coil L_2 to close switch S_1. As a result, the fuel pump is driven.
  Current also flows through coil L_3 to close switch S_2. As a result, power is supplied to the ECU, AFS, igniter and injectors.
- While the engine is running, the ECU turns on the power transistor to supply current to coil L_1 and to close switch S_1. As a result, the fuel pump is driven.
- In the event of engine stall or other abnormal conditions, the ECU turns off the power transistor and open the coil L_1 circuit. As a result, switch S_2 opens to stop driving of the fuel pump, thus securing safety.

SELF-DIAGNOSIS

N14BQAA

Self-diagnosis is a system in which the input signal from each sensor is monitored by the computer (ECU) and should any abnormality happen in the input signal, the abnormal item is memorized by the computer. The diagnosis items are 7 items including that for normal condition and can be confirmed using a voltmeter.

The abnormality-diagnosis memory is kept by direct power supply from the battery. Therefore, the memory of diagnosis result is not erased by turning off the ignition switch. However, it is erased if the back-up power supply is turned off by disconnection of battery cable or ECU connector.

DIAGNOSIS ITEMS

The abnormality-diagnosis items are the following 6 items. If there are two or more items found abnormal, they are indicated in the order of increasing code numbers.

Malfunction No.	Diagnosis item
1	Oxygen sensor
2	Ignition pulse (engine speed sensor)
3	Air flow sensor
5	Throttle position sensor
6	ISC motor position sensor
7	Engine coolant temperature sensor

INDICATION METHOD

Indication is made by deflection of the pointer of voltmeter. Connect a voltmeter to the connector for diagnosis and the following indication will be made.

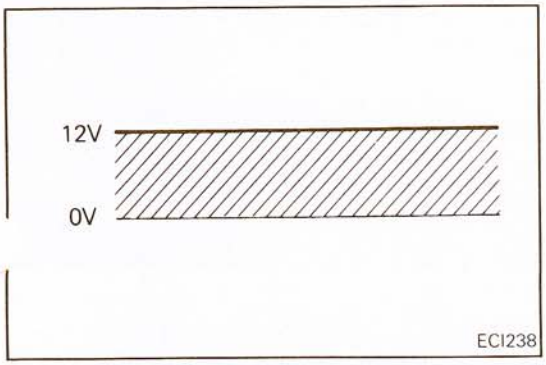

1. When normal
   Constantly 12V is indicated.

2. When abnormal
   Indication alternates between 0V and 12V every 0.4 second.
   When there are two or more abnormal items, the low-code-numbered item is first indicated. Then, after indication of C for 2 seconds, subsequent indication is made in the same manner as mentioned above.
   The following diagram shows an example of indication where codes No. 2 and No. 5 are abnormal.

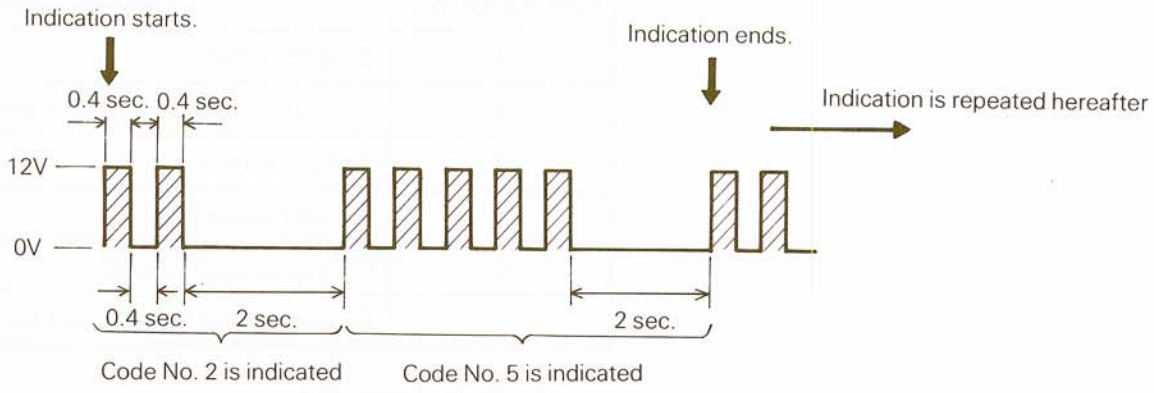

ECI239

SPECIFICATIONS

N14CA-A

GENERAL SPECIFICATIONS

ems	Specifications
Fuel	
Tank capacity lit. (U.S.gal., Imp.gal.)	75 (19.8, 16.5)
Return system	Provided
Filter	High pressure type
Fuel pump	
Type	Electric type
Injection mixer	
Identification model number	46EID-735
Injector type and number	Electromagnetic, 2
Injector identification mark	M (Blue connector, large orifice) L (Gray connector, small orifice)
Throttle bore mm (in.)	46 (1.811)
Fuel pressure regulator	
Regulated pressure kPa (psi)	245 (33.6)
Throttle position sensor (TPS)	Variable resistor type
Idle speed control (ISC) servo	Electric motor
Idle position switch	Contact type, within ISC servo
Motor position sensor (MPS)	Variable resistor type
Electronic control unit (ECU)	
Identification model No.	
Vehicles without an intercooler	E2T13676A
Vehicles with an intercooler	E2T13674
Input sensor	
Air flow sensor (AFS)	Karman vortex type
Atmospheric pressure sensor	Semiconductor diffusion type sensor
Intake air temperature sensor	Thermistor type
Engine coolant temperature sensor	Thermistor type
Oxygen sensor	Zirconia sensor
Vehicle speed sensor	Reed switch type
Inhibitor switch	Contact type switch
Detonation sensor	Piezoelectric device type
Output actuator	
Igniter	
Identification model No.	E2T16576
Control relay	
Identification model No.	E8T00571
Resistor	
Identification model No.	E8T00271
EGR control solenoid valve	ON-OFF solenoid valve
Secondary air control solenoid valve	ON-OFF solenoid valve

SERVICE SPECIFICATIONS

N14CB-A

Items	Specifications
Engine	
Basic ignition timing	10° ± 2°BTDC at curb idle
Actual ignition timing at high altitude	15°BTDC at curb idle
Curb idle speed rpm	850 ± 100
Idle speed when air conditioner is on rpm	1,000 at neutral position 750 at D range (Vehicles with automatic transmission)
Idle speed control (ISC) setting rpm	850
Throttle position sensor (TPS) regulating voltage V	0.48 – 0.52 at curb idle
Injection mixer	
Injector coil resistance Ω	
Blue connector [at 20°C (68°F)]	2 – 3
Gray connector [at 20°C (68°F)]	2 – 3
Throttle position sensor (TPS) resistance kΩ	3.5 – 6.5
Motor position sensor (MPS) output voltage V	Approx. 0.5 – 5
ISC servo motor coil resistance [at 20°C (68°F)] Ω	5 – 11
Input sensor	
Intake air temperature sensor resistance [at 20°C (68°F)] kΩ	2.7
Engine coolant temperature sensor resistance kΩ	
20°C (68°F)	2.5
80°C (176°F)	0.3
Oxygen sensor output voltage V	Approx. 1
Air flow sensor output voltage V	2.2 – 3.2
Atmospheric pressure sensor output voltage V	
101 kPa (14.7 psi)	4
88 kPa (12.8 psi)	3.5
Output actuator	
Resistor resistance [at 20°C (68°F)] Ω	5.5 – 6.5
EGR control solenoid valve resistance [at 20°C (68°F)] Ω	38 – 44
Secondary air control solenoid valve resistance [at 20°C (68°F)] Ω	38 – 44

TORQUE SPECIFICATIONS

N14CC- -

Items	Nm	ft.lbs.
Injection mixer attaching bolt	15 – 20	10.8 – 14.5
Injector holder attaching screw	4 – 6	2.9 – 4.3
Engine coolant temperature sensor	20 – 40	14.5 – 28.9
Oxygen sensor attaching nut	25 – 30	18.1 – 28.7
Detonation sensor	20 – 25	14.5 – 18.1
Throttle position sensor (TPS)	1.5 – 2.5	1.1 – 1.8
Pipe assembly attaching bolt	1.0	0.7
Fuel gauge unit attaching bolt	1.0	0.7
Fuel tank drain plug	15 – 25	11 – 18
Fuel tank attaching nut	25 – 30	18 – 22
Fuel main pipe flare nut	32 – 42	23 – 30
Fuel high pressure hose attaching bolt (eye bolt)	25 – 35	18 – 25
Accelerator cable lock nut	8 – 11	5.8 – 8.0

SEALANTS AND ADHESIVES

N14CE-A

Item	Specified sealant	Quantity
Lid for fuel gauge access opening	3M ART Part No. 8659 or equivalent	As required

SPECIAL TOOLS

N14DA--

Tool (Number and name)	Use	Tool (Number and name)	Use
MD998406 ECI checker 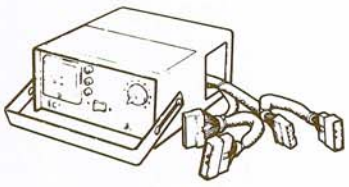	Diagnosis and inspection for ECI system	MD998437 Harness connector 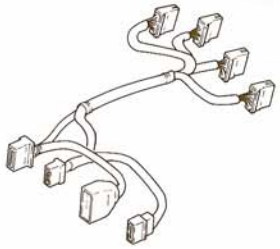	Inspection for ECI system Use with MD998406
MD998459 Harness connector (3P, round) 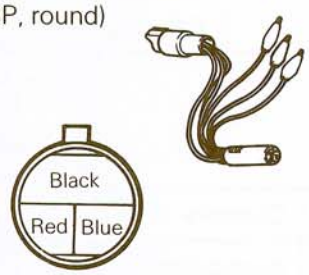	Adjustment of TPS		

TROUBLESHOOTING

N14EBBA

When checking and correcting engine troubles, it is important to start with inspection of the basic systems. In case you have such troubles as (1) engine start failure, (2) unstable idling or (3) poor acceleration, therefore, you should first check the following basic systems:

(1) Power supply
- Battery
- Fusible link
- Fuse

(2) Body ground

(3) Fuel supply
- Fuel line
- Fuel filter
- Fuel pump

(4) Ignition system
- Spark plug
- High tension cable
- Distributor
- Ignition coil

(5) Emission control system
- PCV system
- EGR system
- Vacuum leak

(6) Others
- Ignition timing
- Idle speed

Troubles with the ECI system are often caused by poor contact of harness connector. It is, therefore, important to check harness connector contact.

N14EFBB

Symptom	Probable cause	Remedy	Reference page
Engine will not start or start too hard (cranks OK)	Fuel pump control system malfunction	Check system. If faulty, check components	14-63
	Distributor signal generator or igniter malfunction	Check ignition pulse by using ECI checker	14-64
	Vacuum hose disconnected or damaged	Repair or replace	–
	Power is not supplied to ECU	Check by using checker	14-64
	Damaged control relay	Replace	–
	ECI system malfunction	Check for output of diagnosis code	14-61
	Idle switch malfunction	Check by using checker (Check components and replace if faulty)	14-64 (14-72)
	Injector malfunction	• Check drive signal by using checker • Check component	14-64 14-74
	Damaged resistor	Check component	14-77
	Improper fuel pressure	Check fuel pressure	14-39
	Damaged ECU	Replace	–
	Harness broken/short-circuited or connector not connected securely	Repair or replace	–
Rough idle or engine stalls	ECI system malfunction	Check for output of diagnosis code	14-61
	Idle switch malfunction	Check by using checker (Check components and replace if faulty)	14-64 (14-72)
	Injector malfunction	• Check drive signal by using checker • Check component	14-64 14-74
	Vacuum hose disconnected or damaged	Repair or replace	–
	Atmospheric pressure sensor malfunction	Check output voltage	14-69
	Intake air temperature sensor malfunction	Check by using checker (Check components and replace if faulty)	14-64 (14-70)
	Vehicle speed sensor malfunction	Check by using checker	14-64
	Air conditioner switch malfunction	Check by using checker	14-64
	Inhibitor switch malfunction	Check by using checker	14-64
	ISC servo malfunction	• Check drive signal by using checker • Check component	14-64 14-76
	Improper fuel pressure	Check fuel pressure	14-39
	Harness broken/short-circuited or connector not connected securely	Repair or replace	–

STB Revision

Symptom	Probable cause	Remedy	Reference page
Rough idle or ıgine stalls	Damaged resistor	Check component	14-77
	Engine coolant temperature sensor malfunction	Check by using checker (Check components and replace if faulty)	14-64 (14-70)
	Air flow sensor malfunction	Check by using checker	14-64
	Engine speed sensor malfunction	• Check by using checker • Check harness for continuity	14-64 14-73
	Motor position sensor malfunction	Check by using checker	14-64
Engine hesitates or poor acceleration	ECI system malfunction	Check for output of diagnosis code	14-61
	Injector malfunction	• Check drive signal by using checker • Check component	14-64 14-74
	Improper fuel pressure	Check fuel pressure	14-39
	Atmospheric pressure sensor malfunction	Check output voltage	14-69
	Intake air temperature sensor malfunction	Check by using checker (Check components and replace if faulty)	14-64 (14-70)
	Vacuum hose disconnected or damaged	Repair or replace	–
	Harness broken/short-circuited or connector not connected securely	Repair or replace	–
	Air flow sensor malfunction	Check by using checker	14-64
	Engine coolant temperature sensor malfunction	Check by using checker (Check components and replace if faulty)	14-64 (14-70)
	Throttle position sensor malfunction	Check component and adjust if necessary	14-71
	Engine speed sensor malfunction	• Check by using checker • Check harnesses for continuity	14-64 14-73
Poor fuel mileage	Injector malfunction	• Check drive signal by using checker • Check component	14-64 14-74
	Oxygen sensor malfunction	Check by using checker (Check components and replace if faulty)	14-64 14-73
	ECI system malfunction	Check for output of diagnosis code	14-61
	Improper fuel pressure	Check fuel pressure	14-39

FUEL TANK AND FUEL LINE

N14EAAA

Symptom	Probable cause	Remedy	Reference page
Engine malfunctions due to insufficient fuel supply	Bent or kinked fuel pipe or hose	Repair or replace	–
	Clogged fuel pipe or hose	Clean or replace	–
	Clogged fuel filter or in-tank fuel filter	Replace	14-86
	Water in fuel filter	Replace the fuel filter or clean the fuel tank and fuel line	–
	Dirty or rusted fuel tank interior	Clean or replace	–
	Malfunctioning fuel pump (Clogged filter in the pump)	Replace	14-85
Evaporative emission control system malfunctions (When tank cap is removed, pressure releasing noise is heard)	Mispiping of vapor line	Correct	14-88
	Disconnected vapor line piping joint	Correct	14-88
	Folded, bent, cracked or clogged vapor line	Replace	14-88
	Faulty fuel tank cap	Replace	–
	Malfunctioning overfill limiter (two-way valve)	Replace	14-88

CONTROL FUNCTION TABLE

N14EE--

Functional elements \ Function		Air-fuel ratio control (ECI)	Ignition timing control	Idle seed control (ISC)	Air conditioner power relay control	Fuel pump drive control	Secondary air control	EGR control	Boost meter control	Reference page for individual part checking
In-put	Power supply (interlocked with ignition switch)	X	X	X	X	X	X	X	X	–
	Power supply (battery backup)	X	X	X	X	X	X	X	X	–
	Air flow sensor	X	X				X		X	P.14-64
	Atmospheric pressure sensor	X	X						X	P.14-64
	Intake air temperature sensor	X							X	P.14-70
	Engine coolant temperature sensor	X	X	X			X	X		P.14-70
	Throttle position sensor (TPS)	X		X						P.14-71
	Idle switch	X		X			X			P.14-72
	Motor position sensor (MPS)			X						P.14-64
	Engine speed sensor	X	X	X	X	X	X	X	X	P.14-64
	Oxygen sensor	X								P.14-73
	Vehicle speed sensor			X						ELECTRICAL (GROUP 8)
	Air conditioner switch			X	X					HEATERS & AIR-CONDITIONING (GROUP 24)
	Inhibitor switch (vehicles with an automatic transmission)			X						TRANSMISSION (GROUP 21)
	Detonation sensor (input to igniter)		X							–
	Ignition switch ST terminal (start signal)	X	X	X						–

Functional elements \ Function		Air-fuel ratio control (ECI)	Ignition timing control	Idle seed control (ISC)	Air conditioner power relay control	Fuel pump drive control	Secondary air control	EGR control	Boost meter control	Reference page for individual part checking
Output	Injector	X								P.14-74
	ISC servo			X						P.14-76
	Igniter		X							–
	Air conditioner power relay				X					HEATERS & AIR-CONDITIONING (GROUP 24)
	Control relay					X				P.14-76
	Resistor	X								P.14-77
	Fuel pressure regulator	X								P.14-39
	Secondary air control solenoid valve						X			EMISSION CONTROL SYSTEMS (GROUP 25)
	EGR control solenoid valve							X		EMISSION CONTROL SYSTEMS (GROUP 25)
	Boost meter								X	ELECTRICAL (GROUP 8)

STB Revision

SERVICE ADJUSTMENT PROCEDURES

N14FJ- -

APPEARANCE OF INJECTION MIXER

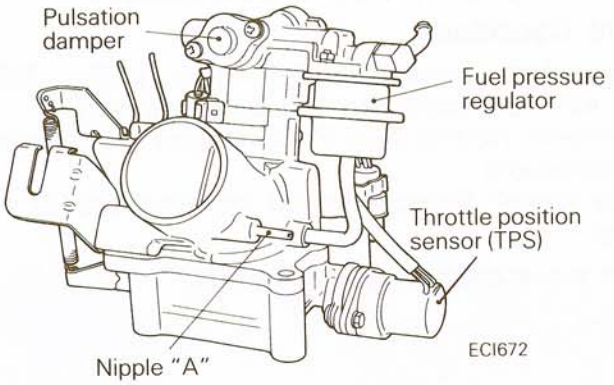

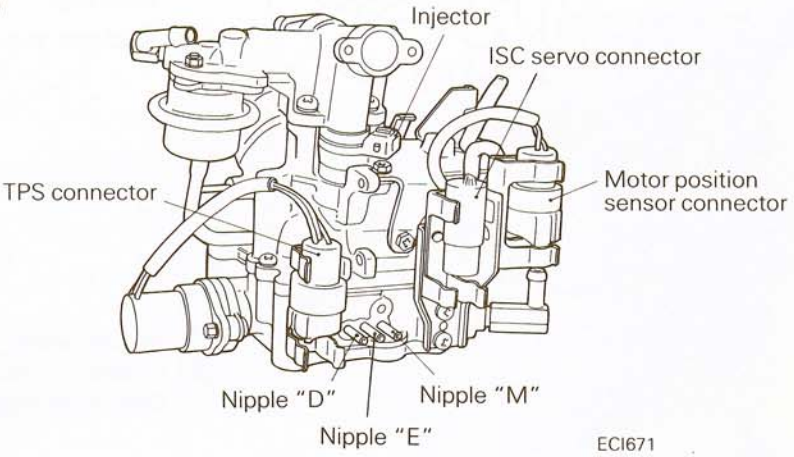

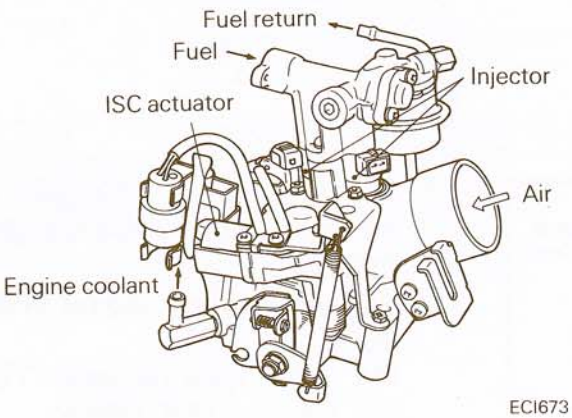

IDLE SPEED CHECK PROCEDURE N14FHAA

Refer to GROUP 0 LUBRICATION AND MAINTENANCE – Idle Speed.

IDLE SPEED CONTROL (ISC) AND THROTTL POSITION SENSOR (TPS) ADJUSTMENT N14FIAA

Adjustment Conditions

- Engine coolant temperature: 85 – 95°C (185 – 205°F)
- Lights, electric cooling fan and accessories: OFF
- Transmission: Neutral (N or P for vehicles with an automatic transmission)
- Steering wheel: Straightforward (vehicles with a power steering)

(1) Slacken the accelerator cable enough.

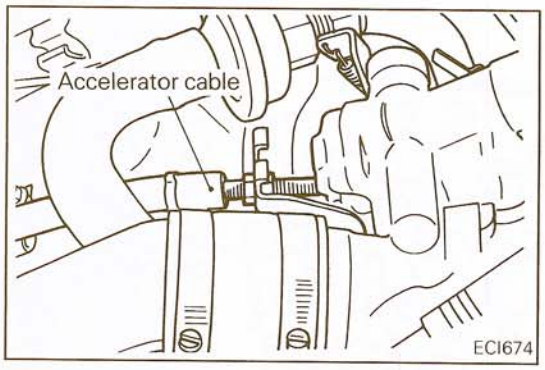

(2) Disconnect the TPS connector.
(3) Connect the special tool (Harness Connector) between disconnected connectors.

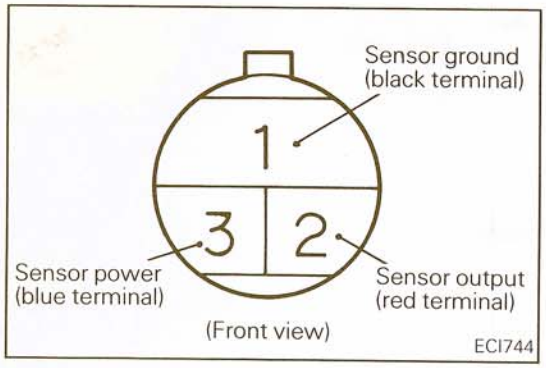

(4) Connect a voltmeter between red terminal (sensor output) and black terminal (sensor ground) of the special tool.

Caution
Use an accurate digital voltmeter.

NOTE
The connections between TPS connector and the special tool are as shown below.

TPS connector	Special tool
Terminal ② (sensor output)	and Terminal Red
Terminal ① (sensor ground)	and Terminal Black

(5) Set a tachometer.
(6) Turn ignition switch to "LOCK".
(7) Remove the large harness connector and small harness connector from the ECU.
(8) Set check switch of the ECI checker to OFF.
(9) Set select switch of the ECI checker to A.

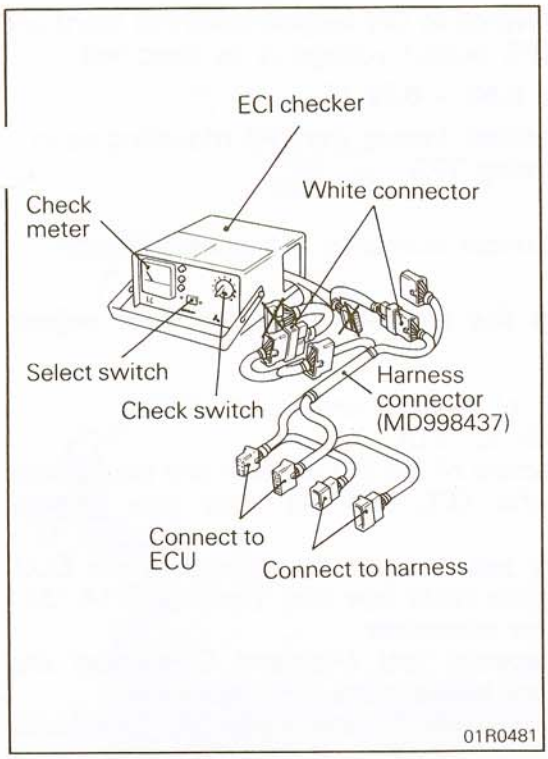

(10)Connect white color connectors, with labeled "CHECKER", of the harness connector to the connectors of ECI checker, and then connect harness connector to the ECU and the harness connectors.
(11)Set select switch of ECI checker to "A" and check switch to "7".

NOTE
The voltmeter indicates motor position sensor (MPS) output voltage.

(12)In order to prevent binding of the throttle valve, open the throttle valve by hand to a half or more opening two or three times and then release it to allow to return with a snap. Then, loosen the fixed SAS enough.
(13)Start the engine and run idle.
(14)Check that the engine speed and motor position sensor (MPS) output voltage (voltmeter reading) are as specified.

Standard value:
Engine speed 850 rpm
MPS output voltage 0.9 V

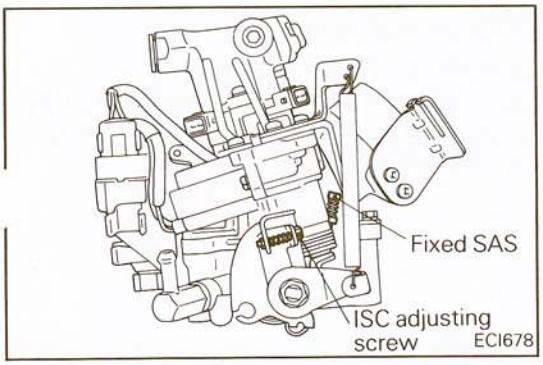

(15)If these are not as specified, adjust by the ISC adjusting screw.

Caution
1. **When turning the ISC adjusting screw, use hexagon wrench whenever possible. To prevent the screw from becoming loose due to backlash of the screw, make the adjustment only when it is turned in the tightening direction.**
2. **After adjusting with the ISC adjusting screw, allow some time for the engine rotation to stabilize. Then, read the engine speed and the voltage.**

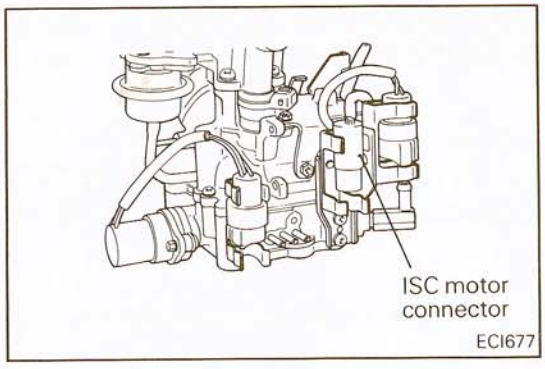

(16)Turn the ignition switch to "LOCK".
(17)Disconnect the ISC motor connector and fix the ISC motor.
(18)Start the engine and run idle.

(19)Tighten the fixed SAS until the engine speed starts to increase. Then, loose it until the engine speed ceases to drop (touch point) and then tighten one turn from the touch point.
(20)Stop the engine.

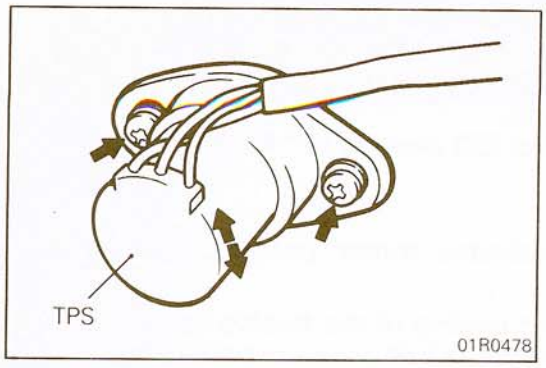

(21)Turn the ignition switch to ON (engine does not start) and check that the TPS output voltage is as specified.

Standard value: 0.48 – 0.52 V

(22)If it is not as specified, loosen the TPS mounting screw and adjust by turning TPS.

NOTE
Turning TPS clockwise increases the output voltage.

Caution
Securely tighten the mounting screws after adjustment.

(23)Set check switch of the ECI checker to OFF.
(24)Set ignition switch to "LOCK".
(25)Disconnect connectors of the ECI checker and the harness connector from the ECU and the body side harness connectors.
(26)Connect the body side harness connectors to the ECU.
(27)Adjust the accelerator cable free play. (Refer to P.14-134.)
(28)Connect ISC motor connector.
(29)Disconnect the special tool (Harness Connector) and voltmeter, and then connect the TPS connector.
(30)Start the engine and check that the engine idle speed is as specified.

Standard value: 850 ± 100 rpm

(31)Turn the ignition switch to "OFF".
Disconnect the battery terminal for 5 to 6 seconds and then reconnect it. (This erases the data stored in diagnosis memory during the ISC adjustment.)

INSPECTION OF DISTRIBUTOR ADVANCE CONTROL VACUUM (D VACUUM) N14FUBA

Inspection Condition

Engine coolant temperature: 85 – 95°C (185 – 205°F)

(1) Disconnect the vacuum hose from the injection mixer D vacuum nipple and connect a hand vacuum pump to the nipple.

NOTE
For the location of the nipple, refer to the Appearance of Injection Mixer (P.14-33).

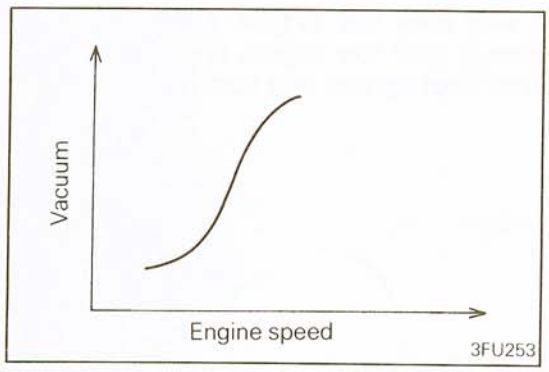

(2) Start and race the engine to make sure that D vacuum increases with the engine speed.

NOTE
If abnormality is found in change of vacuum, clogged injection mixer D port is suspected. Therefore, clean the port as necessary.

INSPECTION OF EGR VALVE CONTROL VACUUM (E VACUUM) N14FVBA

Checking Condition

Engine coolant temperature: 85 – 95°C (185 – 205°F)

(1) Disconnect the vacuum hose from the injection mixer E vacuum nipple and connect a hand vacuum pump to the nipple.

NOTE
For the location of the nipple, refer to the Appearance of Injection Mixer (P.14-33).

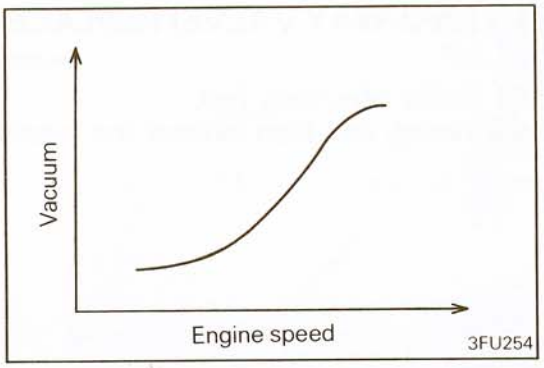

(2) Start and race the engine to make sure that E vacuum increases with the engine speed.

NOTE
If abnormality is found in change of vacuum, clogged injection mixer E port is suspected. Therefore, clean the port as necessary.

INSPECTION OF SECONDARY AIR CONTROL VACUUM (M VACUUM) N14FXAA

Checking Condition

Engine coolant temperature: 85 – 95°C (185 – 205°F)

(1) Disconnect the vacuum hose from the injection mixer M vacuum nipple and connect a hand vacuum pump to the nipple.

NOTE
For the location of the nipple, refer to the Appearance of Injection Mixer (P.14-33).

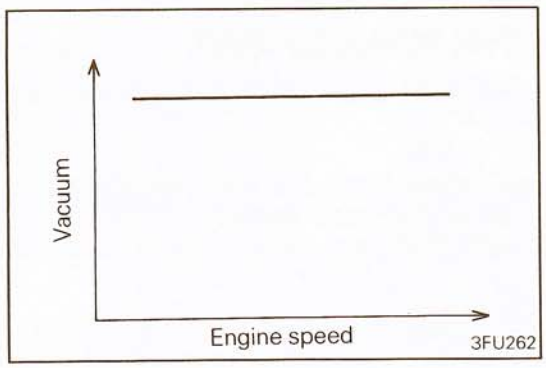

(2) Start and race the engine to make sure that M vacuum is kept constant regardless of the increased engine speed.

NOTE
If M vacuum is not formed, clogged injection mixer M port is suspected. Therefore, clean the port as necessary.

INSPECTION OF THROTTLE POSITION SENSOR N14FSAA

INSPECTION OF INJECTOR
INSPECTION OF ISC SERVO
INSPECTION OF FUEL PRESSURE REGULATOR

Refer to INSPECTION OF ECI SYSTEM COMPONENTS (P.14-70).

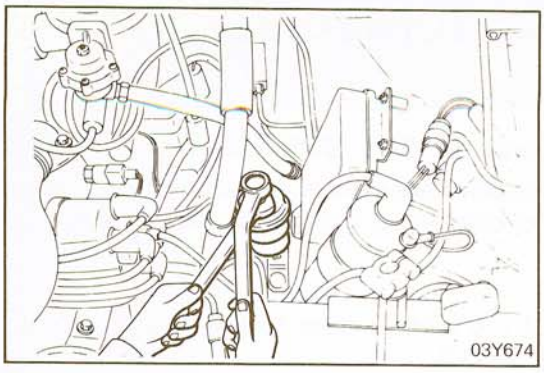

FUEL FILTER REPLACEMENT N14FCBA

(1) Reduce the internal pressure of the fuel pipes and hoses.
(2) Remove the eye bolts while holding the fuel filter nuts securely.
(3) Remove the fuel filter assembly.

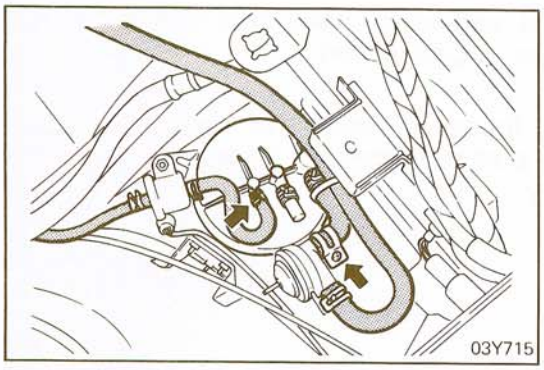

OVERFILL LIMITER (TWO-WAY VALVE) REPLACEMENT N14FEAA

(1) Remove the overfill limiter mounting bolt.
(2) Disconnect the vapor hoses, and then remove the overfill limiter.

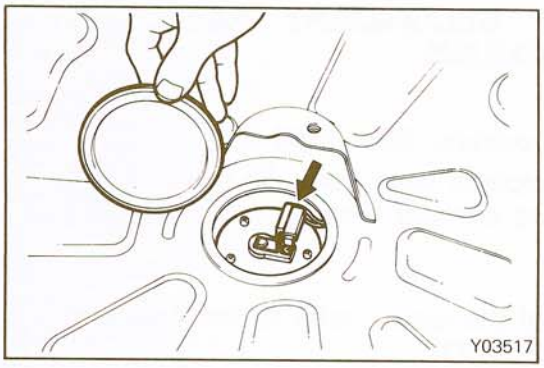

FUEL GAUGE UNIT REPLACEMENT N14FFAD

(1) Pry up and remove the plug on the baggage compartment floor.
(2) Disconnect the fuel gauge unit connectors.
(3) Remove the fuel gauge unit.
(4) After installing the fuel gauge unit, confirm that the unit securely grounded.
(5) When installing the floor plug, apply a specified sealant around the circumference of the floor plug mounting surface.

Specified sealant: 3M ART Part No. 8659 or equivalent

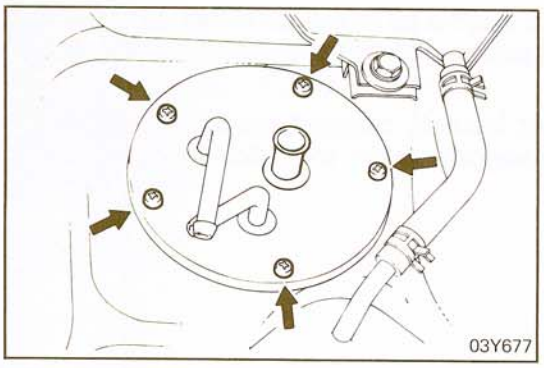

IN-TANK FUEL FILTER REPLACEMENT N14FCBC

(1) Remove the high floor side panel located in the baggage compartment floor.
(2) Pry up and remove the lid.
(3) Disconnect the fuel hoses from the pipe assembly.
(4) Remove the pipe assembly from the tank.
(5) Press the tabs on the filter, and remove the in-tank fuel filter.

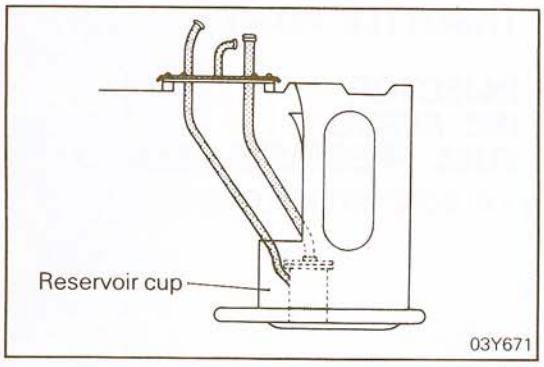

NOTE
When installing the in-tank fuel filter, the filter should be placed inside the reservoir cup located inside the fuel tank, and then the pipe assembly should be tightened to the fuel tank securely.

STB Revision

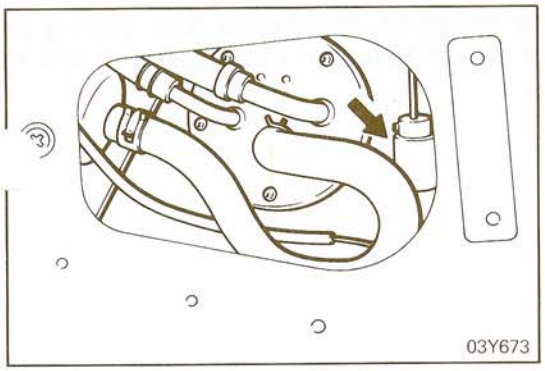

RELEASING RESIDUAL PRESSURE OF FUEL HIGH PRESSURE HOSE N14FGAB

Reduce the internal pressure of the fuel main pipes and hoses by using the following procedure.

NOTE
Be sure to reduce the internal pressure. If the hose is removed from the fuel main pipe without reducing the internal pressure, fuel will gush out.

(1) Remove high floor side panel located in the baggage compartment floor.
(2) Start the engine, and then disconnect the fuel gauge unit connector.
(3) After the engine has been stopped, set the ignition key to "OFF" position.
(4) Disconnect the battery cable from the negative terminal of the battery.

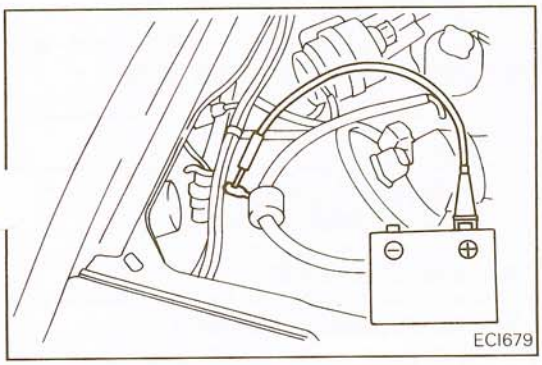

FUEL PUMP OPERATION CHECK N14FDAA

(1) Turn the ignition switch to OFF.
(2) Apply battery voltage to the fuel pump connector and check the pump operating sound.

NOTE
The fuel pump is in-tank type and its operating sound is hard to hear without removing the fuel filler cap.

(3) Pinch the fuel hose with fingers to check that fuel pressure is felt.

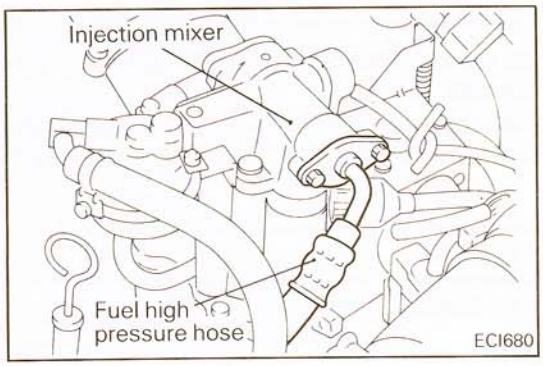

MEASUREMENT OF FUEL PRESSURE N14FNAA

(1) Make the following operations to release the pressure remaining in fuel pipe line so that fuel will not flow out.
  ① Disconnect the fuel pump harness connector. (Connector location: below rear seat cushion)
  ② Start the engine and after it stops by itself, turn the ignition switch to OFF.
  ③ Disconnect the battery (–) terminal.
  ④ Connect the fuel pump harness connector.

(2) Disconnect the fuel high pressure hose from the injection mixer.

Caution
Cover the hose connection with rags to prevent splash of fuel that could be caused by some residual pressure in the fuel pipe line.

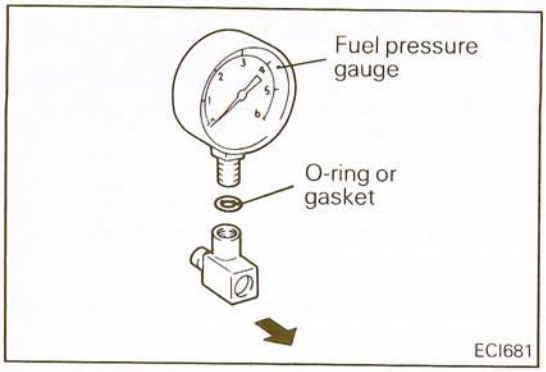

(3) Set a fuel pressure gauge on the special tool, placing an adequate O-ring or gasket between the gauge and tool to prevent fuel leaks.

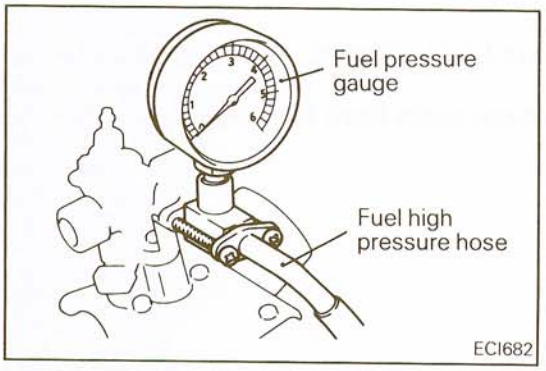

(4) Install the special tool attached with fuel pressure gauge on the injection mixer.
(5) Insert the fuel high pressure hose into the special tool and tighten securely with the attached two special tool screws.
(6) Connect the battery ⊖ terminal.
(7) Apply battery voltage to the fuel pump terminal to operate the fuel pump so that fuel pressure will act. In this state, make sure that the fuel pressure gauge and special tool connection present no fuel leaks.
(8) Measure the fuel pressure when the engine is running at idle.

Standard value: 240 – 260 kPa (35 – 38 psi)

(9) If the pressure is out of specification, determine and remove causes according to the following table.

Fuel pressure	Probable cause	Remedy
Lower than specified	a. Clogged fuel strainer b. Faulty pressure regulator (regulator inside valve open) c. Faulty fuel pump	a. Replace fuel strainer b. Replace pressure regulator c. Replace fuel pump
Higher than specified	a. Faulty pressure regulator (regulator inside valve binding) b. Clogged fuel return hose or pipe	a. Replace pressure regulator b. Clean or replace hose or pipe

(10) Stop the engine and check change of fuel pressure gauge indication, which should not drop.
If the gauge indication drops, observe the rate of drop and determine and remove the causes according to the following table.

Fuel pressure	Probable cause	Remedy
Fuel pressure drops slowly after engine is stopped	a. Faulty injector (leaks due to trapped foreign matter)	a. Replace injector
Fuel pressure drops sharply immediately after engine is stopped	a. Faulty fuel pump (pump inside check valve binding) b. Faulty pressure regulator (regulator inside valve fails to close)	a. Replace fuel pump b. Replace pressure regulator

(11) Release residual pressure from the fuel pipe line.
(12) Remove the fuel high pressure hose and the special tool from the injection mixer.

Caution
Cover the hose connection with rags to prevent splash of fuel that could be caused by some residual pressure in the fuel pipe line.

STB Revision

(13)Using a new O-ring, install the fuel high pressure hose. Tighten the screws firmly.
(14)Check for fuel leaks.
① Apply battery voltage to the fuel pump terminal to operate the fuel pump.
② With fuel pressure acting, check the fuel line for leaks.

INSPECTION OF ECI SYSTEM

N14PAAA

CAUTIONS ON INSPECTION

1. Before removing or installing a part, read diagnosis code and then disconnect the battery ⊖ termin-' cable.
2. Before disconnecting the cable from battery terminal, turn the ignition switch to OFF. Removal or connection of battery cable during engine operation or while the ignition switch is ON could cause erroneous operation of the ECU or damage to semiconductors.
3. The control harnesses between the ECU and the ignition coil (⊖ terminal) and oxygen sensor are shielded wires with shield grounded to the body in order to prevent influence of ignition noises and radio interference. When the shielded wire is faulty, therefore, the control harness must be replaced.
4. When ECI checker is used, pay attention to the following:
   - Avoid rough operation of switches.
   - Do not subject ECI checker to shock and other external forces, heat, etc.
   - Keep the checker away from water and oil.
   - Store ECI checker in a moisture- and dust-free place and take steps to protect the checker from heat and vibration.

CIRCUIT DIAGRAMS
ECI SYSTEM

N14EC-B

(Vehicles with Manual Transmission and Needle Pointer Meter)

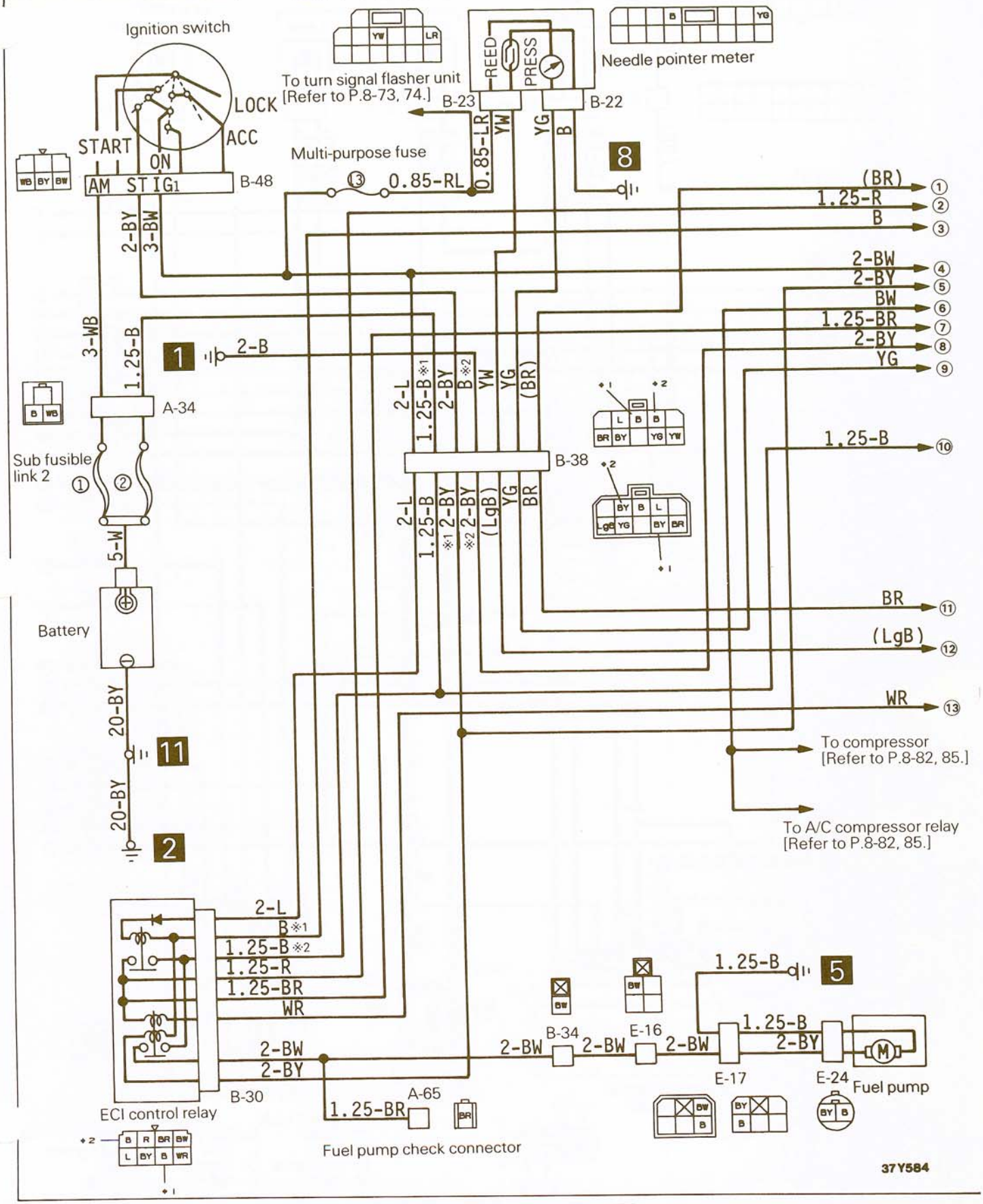

STB Revision

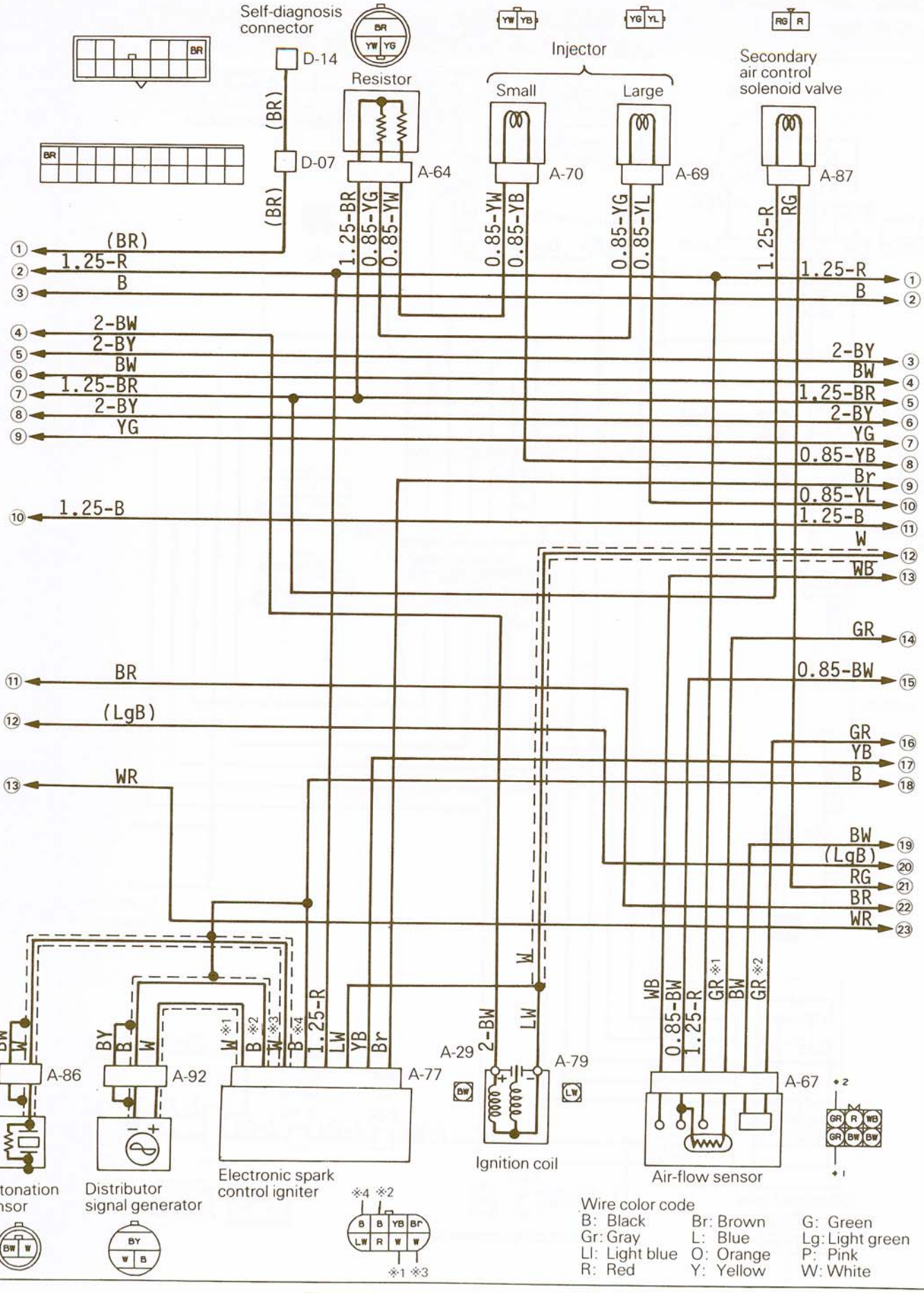

STB Revision

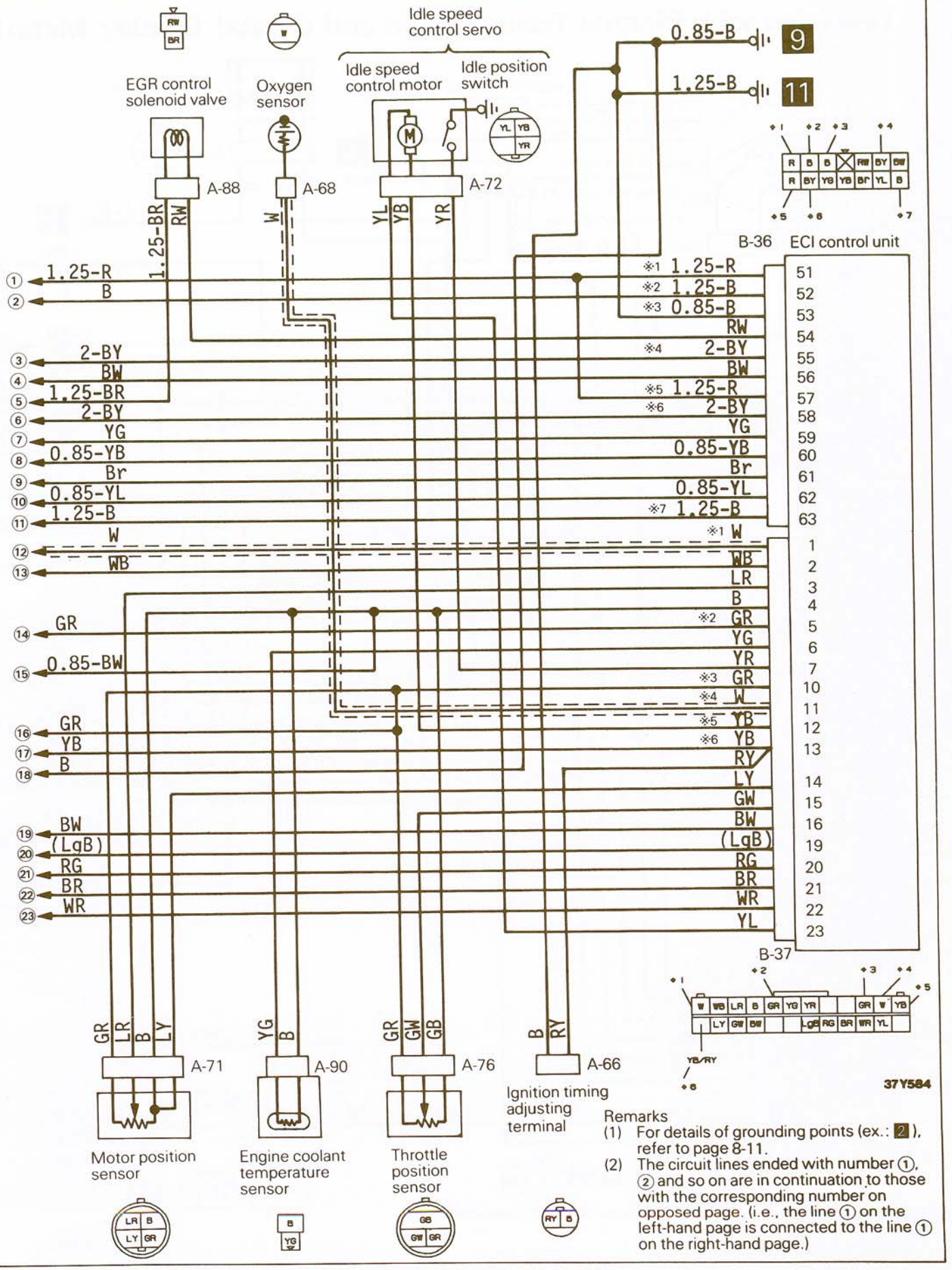

Remarks

(1) For details of grounding points (ex.: 2), refer to page 8-11.

(2) The circuit lines ended with number ①, ② and so on are in continuation to those with the corresponding number on opposed page. (i.e., the line ① on the left-hand page is connected to the line ① on the right-hand page.)

(Vehicles with Manual Transmission and Crystal Display Meter)

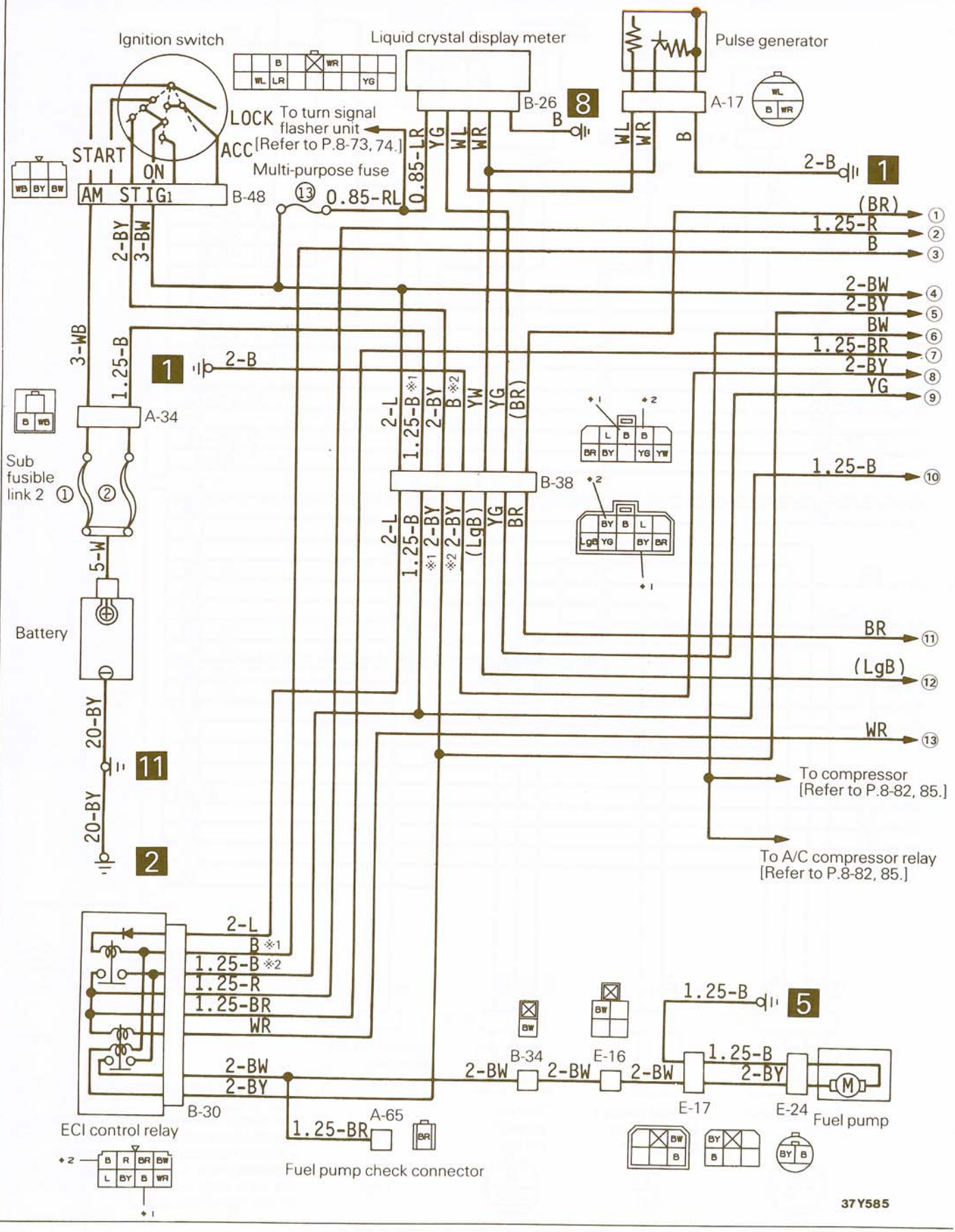

STB Revision

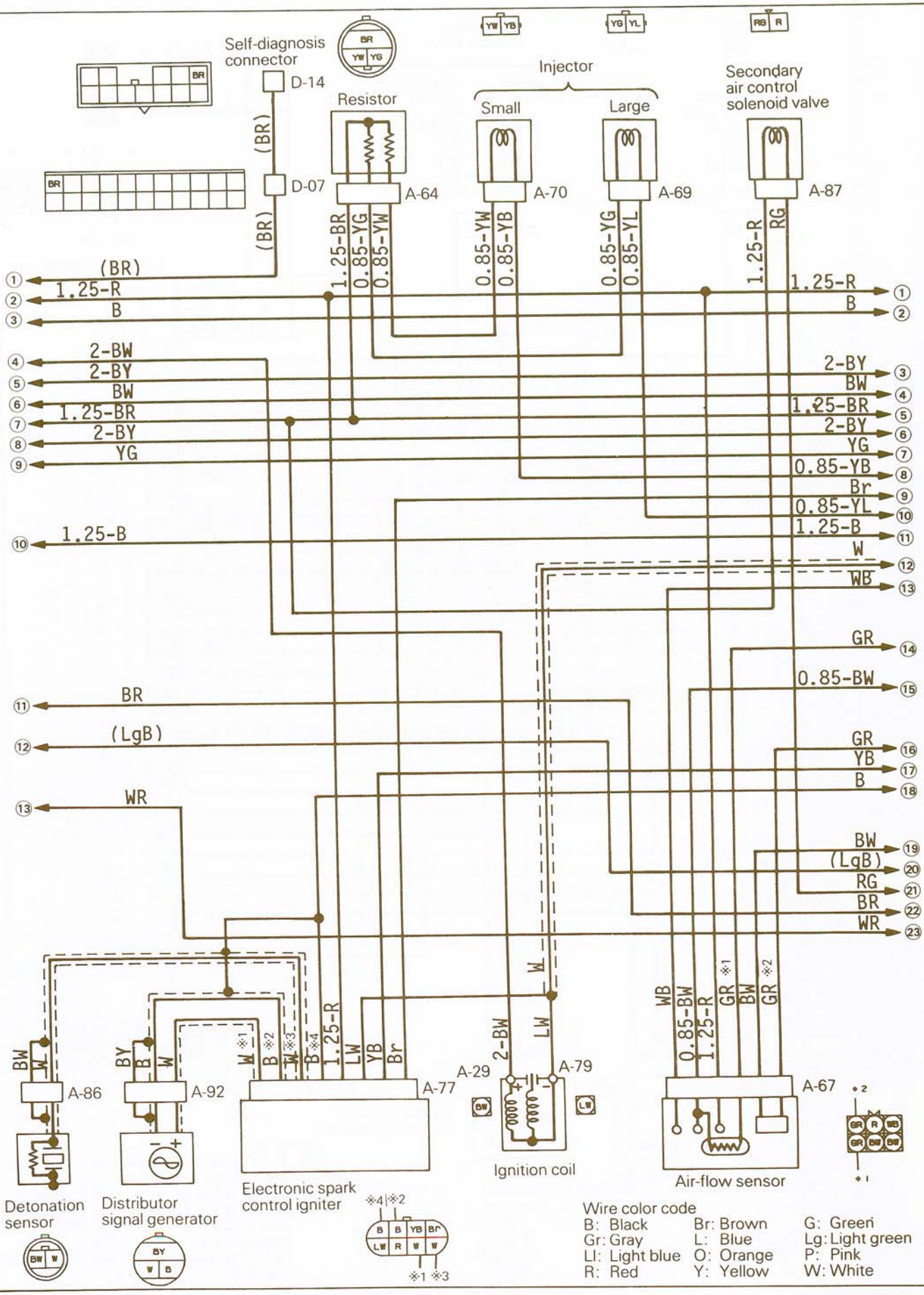

STB Revision

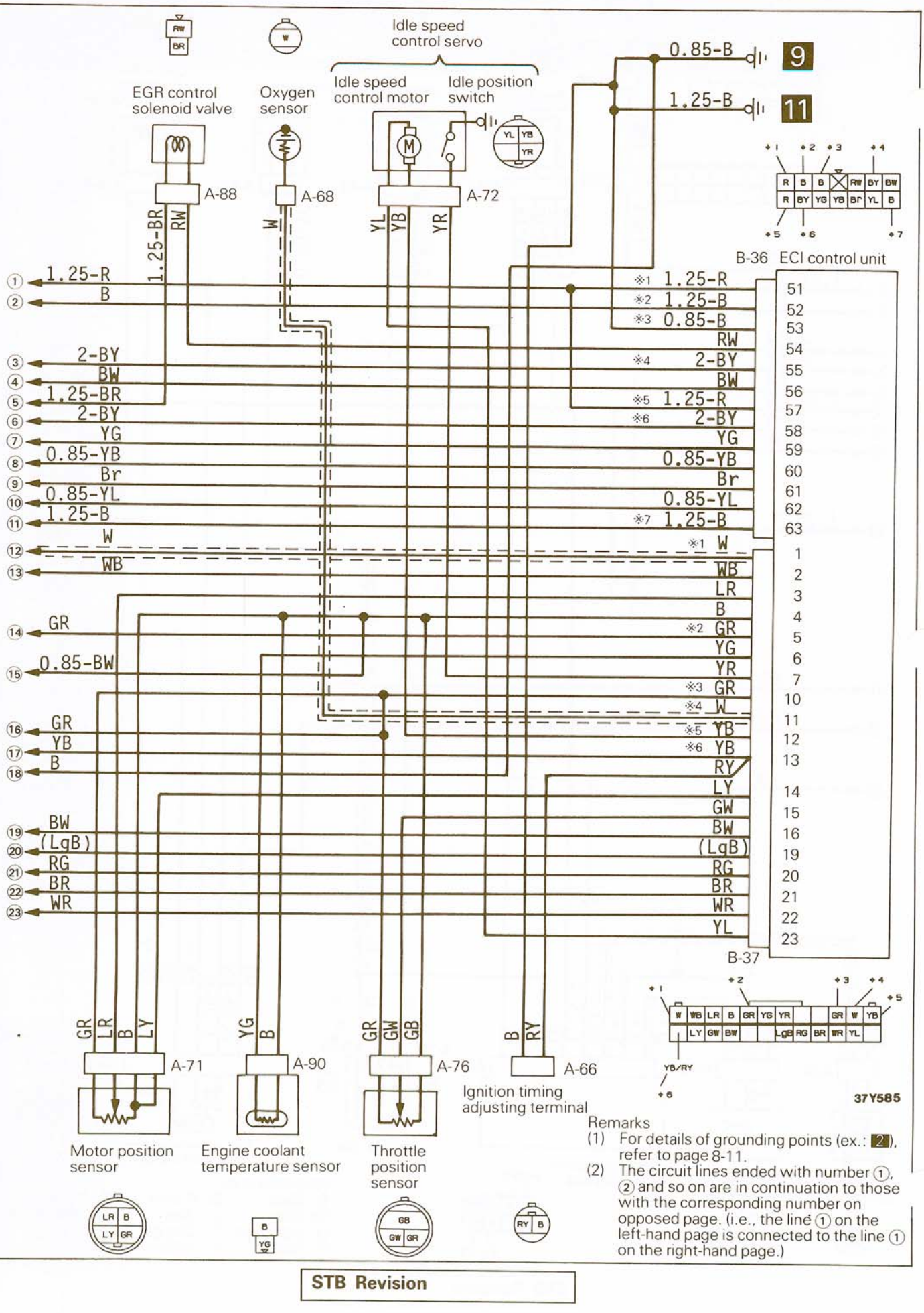

Remarks

(1) For details of grounding points (ex.: 2), refer to page 8-11.

(2) The circuit lines ended with number ①, ② and so on are in continuation to those with the corresponding number on opposed page. (i.e., the line ① on the left-hand page is connected to the line ① on the right-hand page.)

(Vehicles with Automatic Transmission and Needle Pointer Meter)

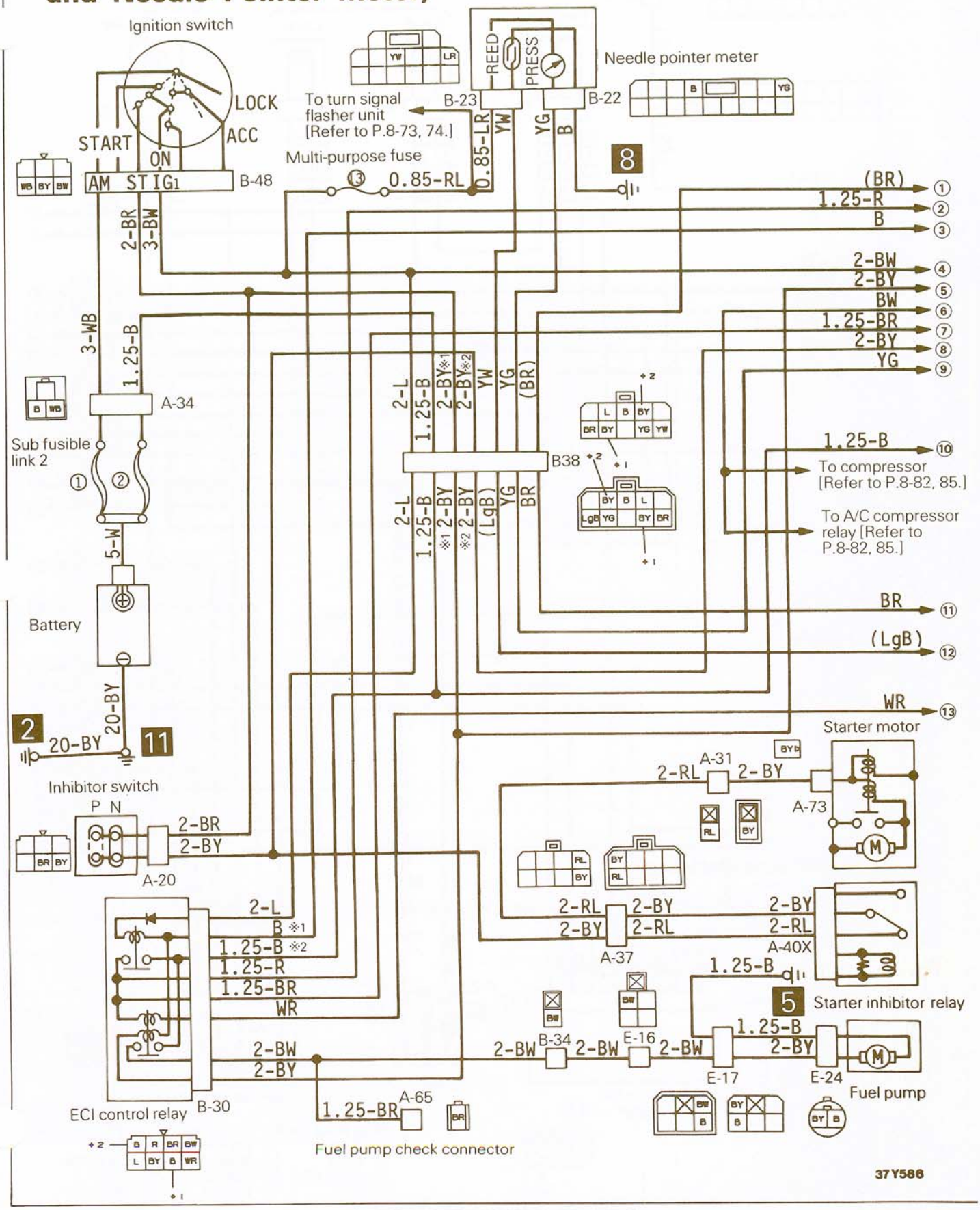

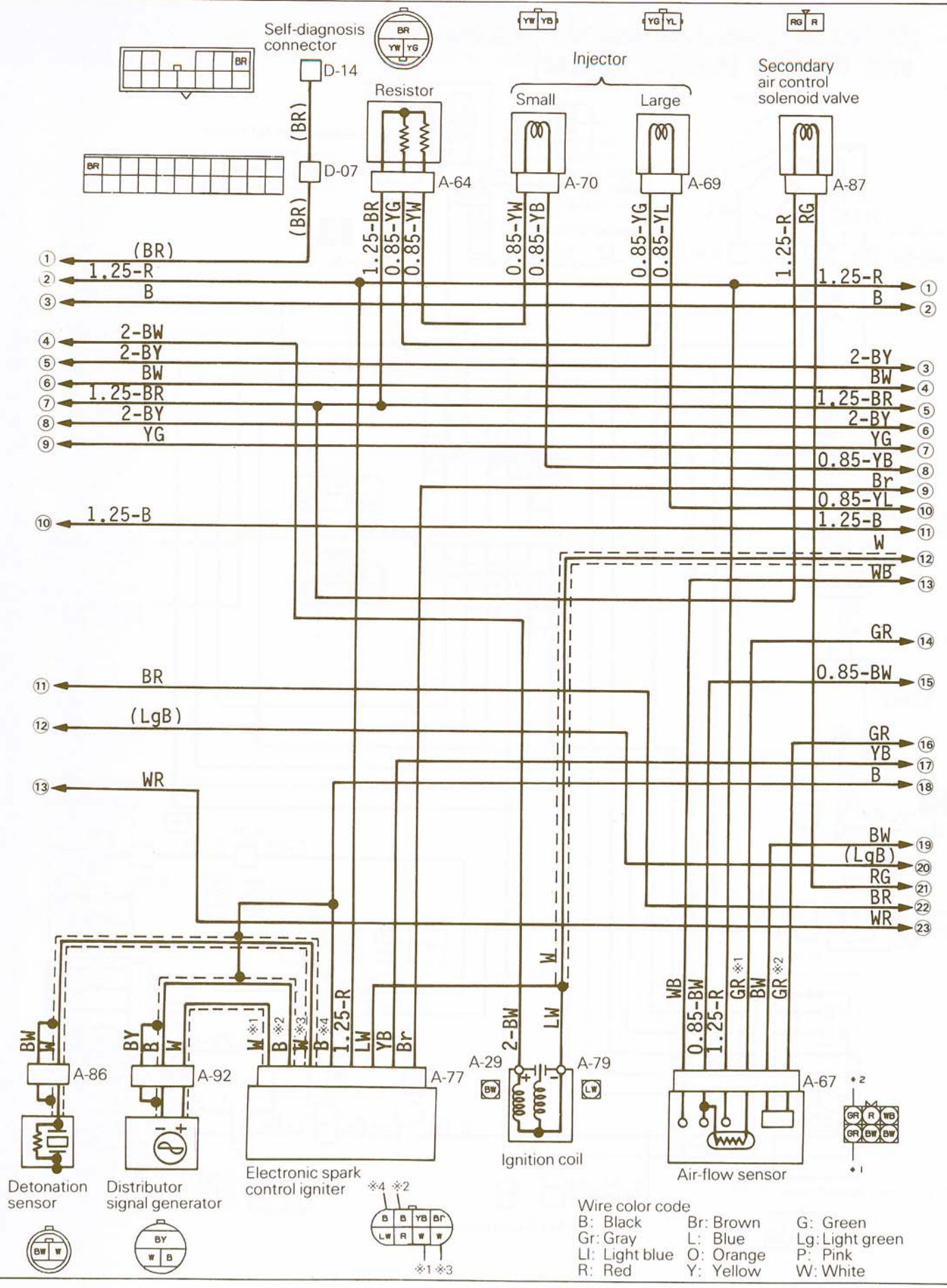

STB Revision

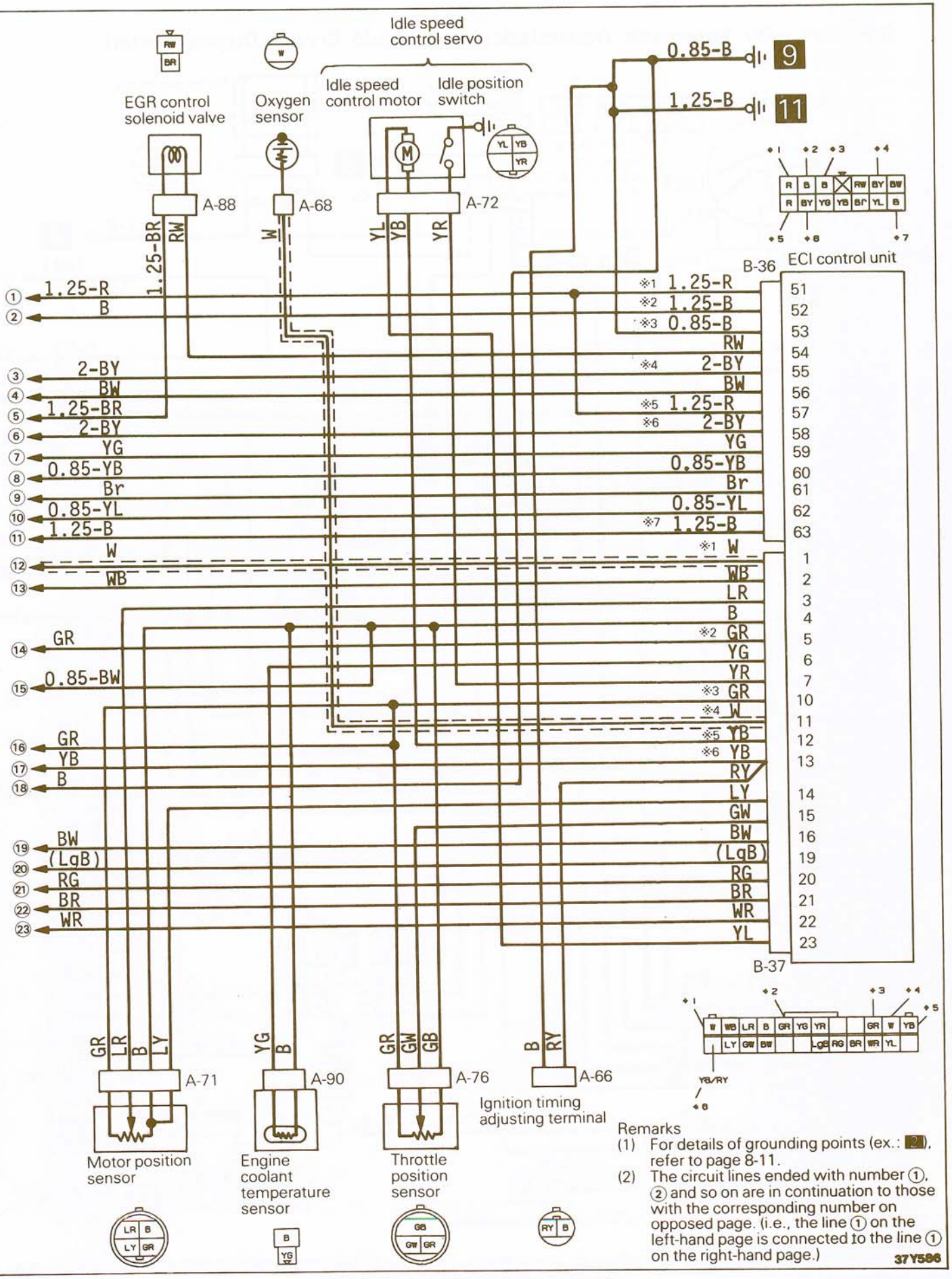

Remarks
(1) For details of grounding points (ex.: 2), refer to page 8-11.
(2) The circuit lines ended with number ①, ② and so on are in continuation to those with the corresponding number on opposed page. (i.e., the line ① on the left-hand page is connected to the line ① on the right-hand page.)

37Y586

(Vehicles with Automatic Transmission and Liquid Crystal Display Meter)

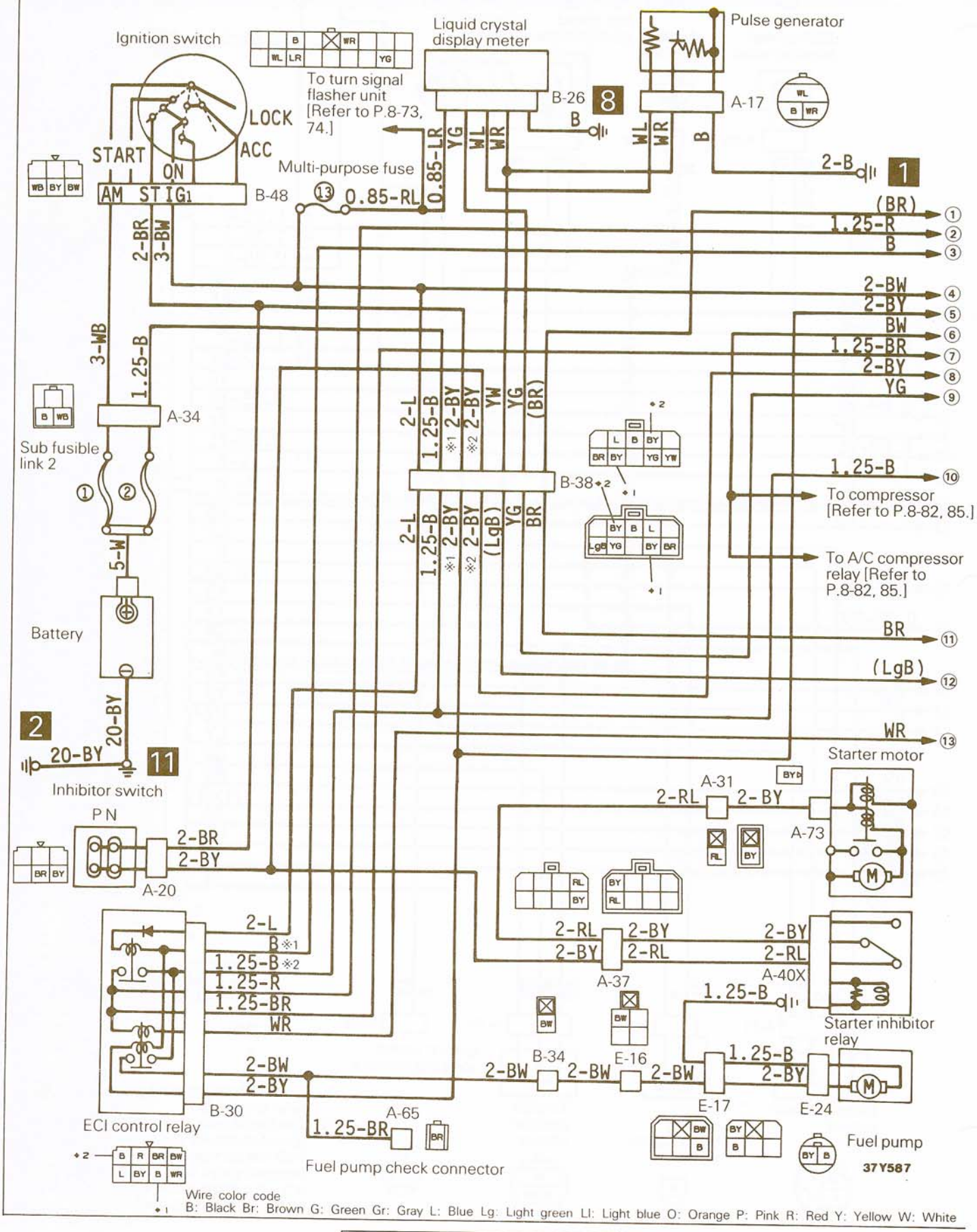

STB Revision

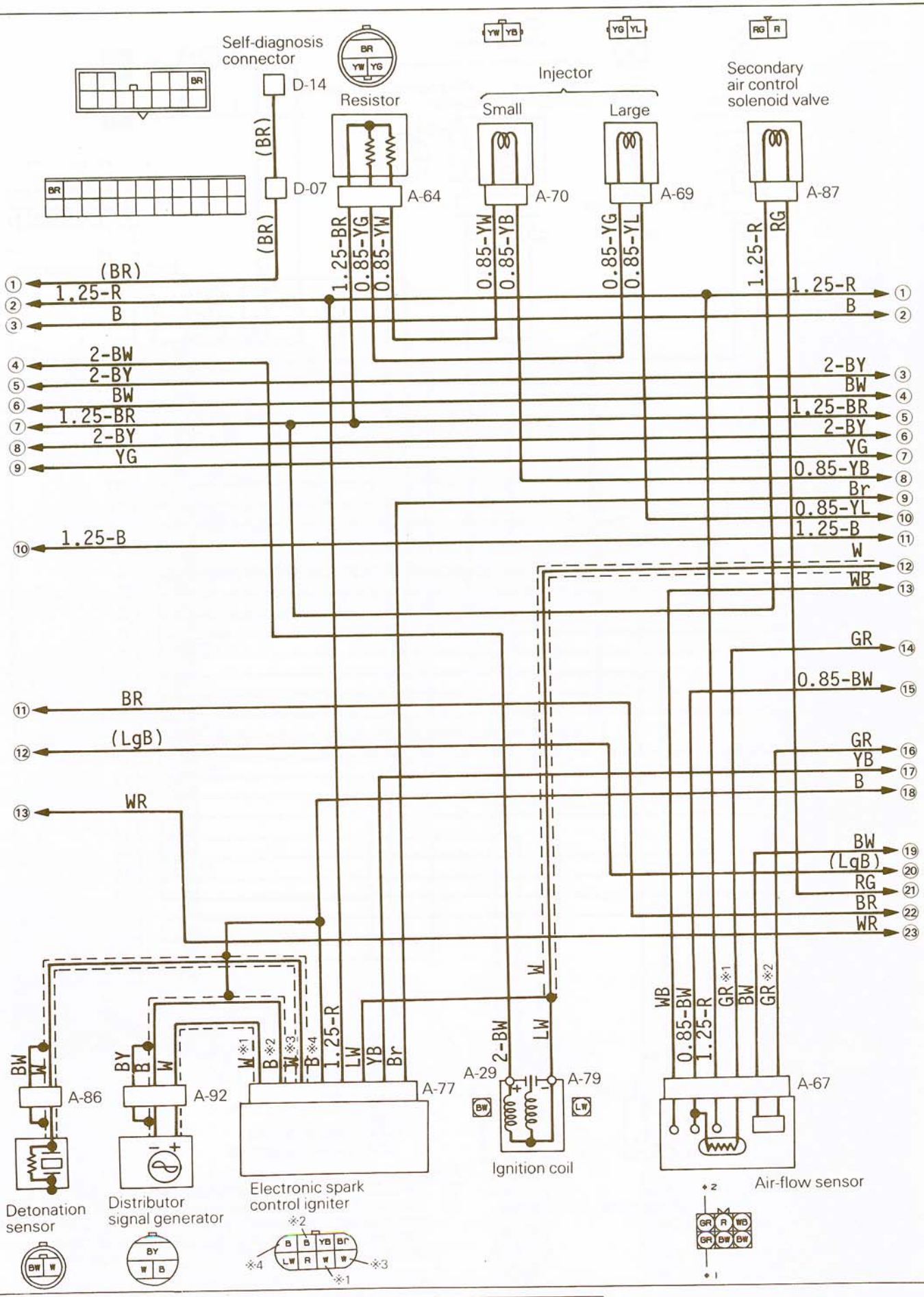

STB Revision

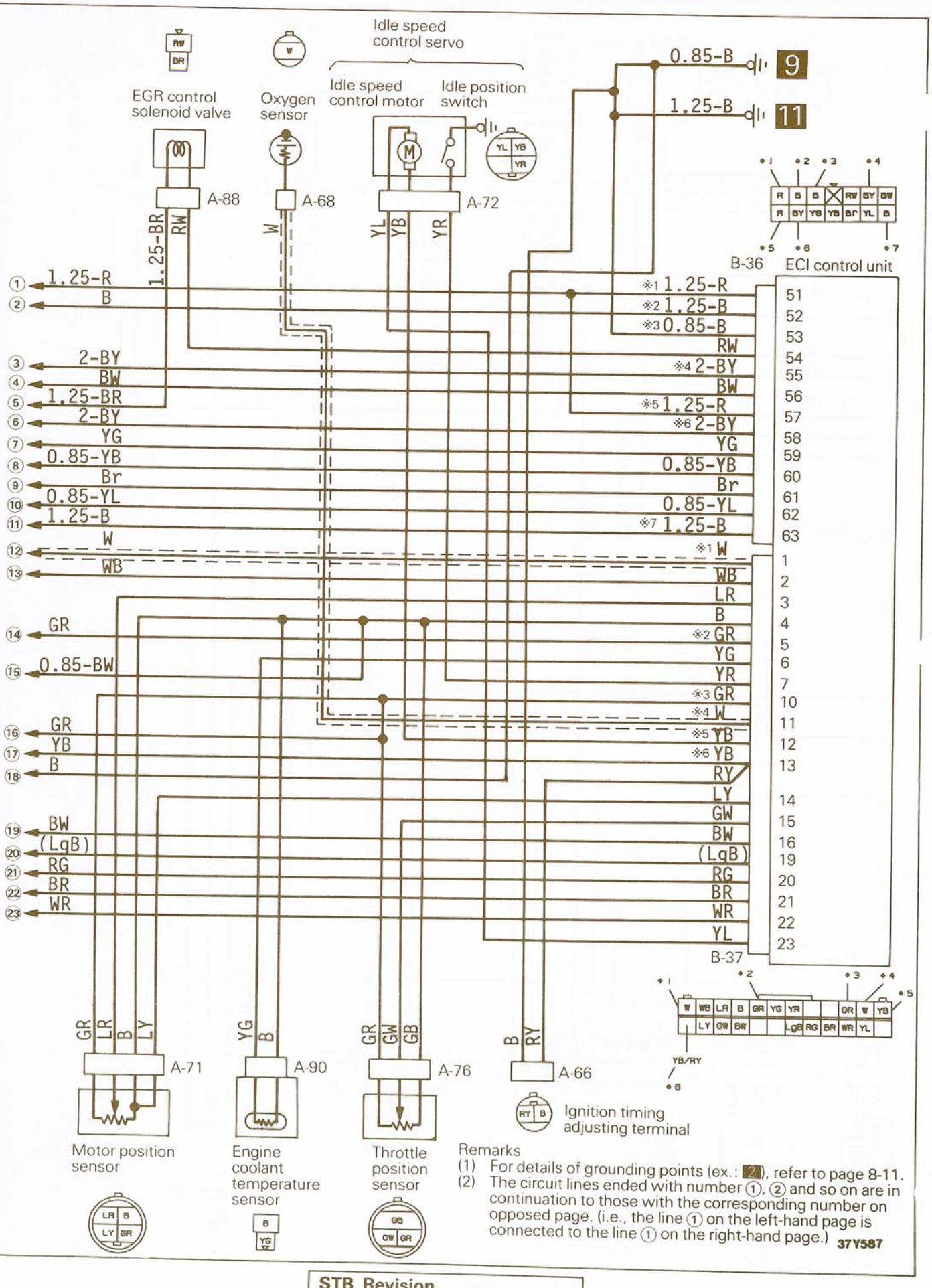

Remarks
(1) For details of grounding points (ex.: 2), refer to page 8-11.
(2) The circuit lines ended with number ①, ② and so on are in continuation to those with the corresponding number on opposed page. (i.e., the line ① on the left-hand page is connected to the line ① on the right-hand page.)

37Y587

STB Revision

COMPONENT LAYOUT AND VACUUM HOSE PIPINGS

N14ED-B

COMPONENT LAYOUT

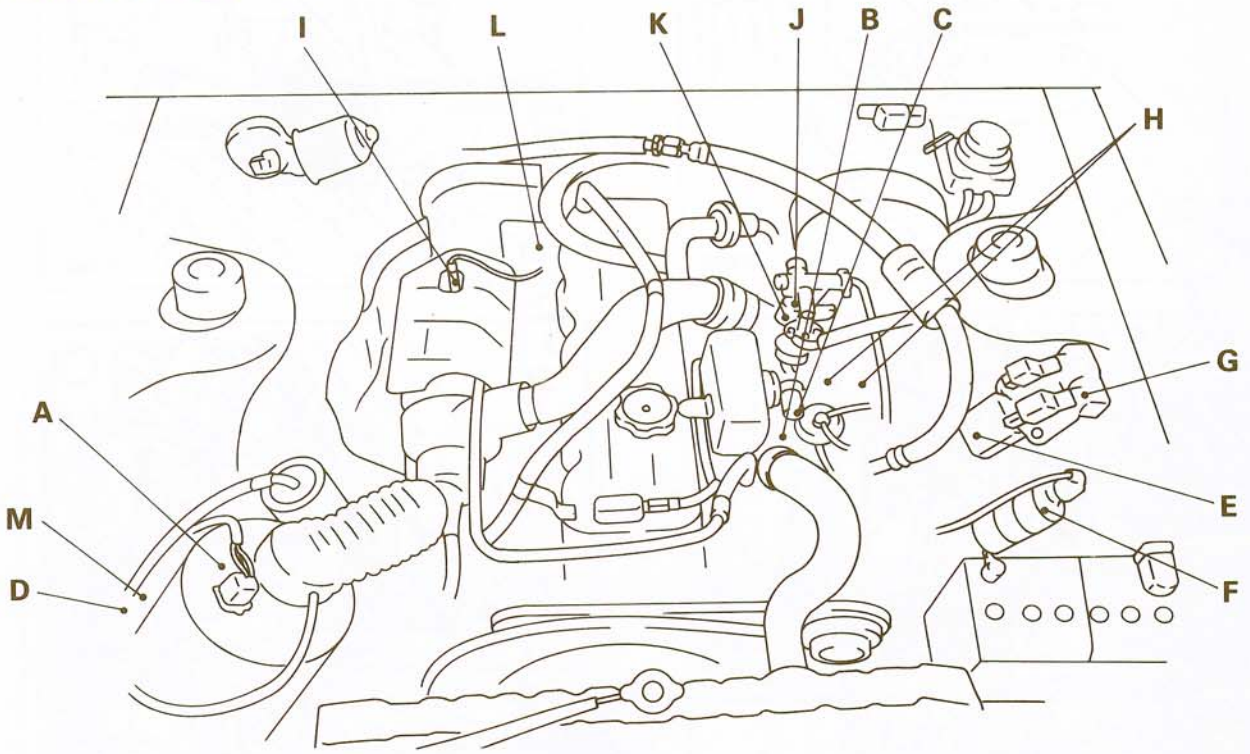

ECI683

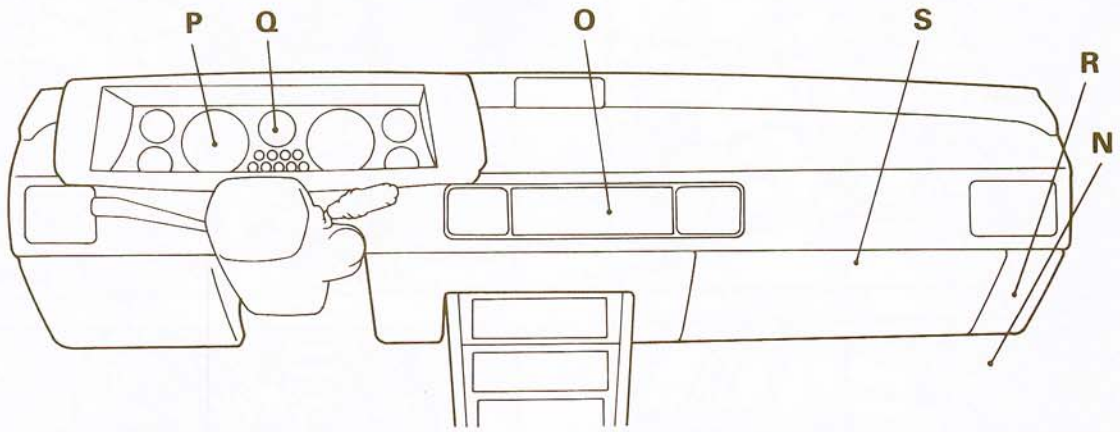

ECI684

Name	Symbol	Name	Symbol
Air conditioner relay	G	Control relay	R
Air conditioner switch	O	Fuel pump check terminal, ignition timing adjusting terminal	D
Air flow sensor (with built-in atmospheric pressure sensor and intake air temperature sensor)	A	Inhibitor switch (vehicles with an automatic transmission)	L
Boost meter	Q	Injector	J
Coolant temperature sensor	B	ISC motor (idle switch, motor position sensor)	K
Diagnosis terminal	S	Oxygen sensor	I
ECU	N	Resister	M
EGR control solenoid valve, secondary air control solenoid valve	H	Throttle position sensor (TPS)	C
Engine speed sensor (ignition coil ⊖)	F	Vehicle speed sensor (reed switch)	P
Igniter	E		

STB Revision

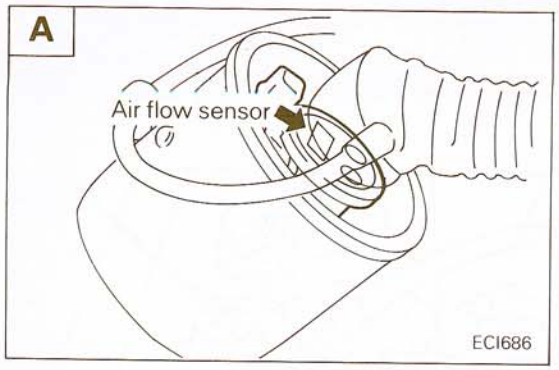

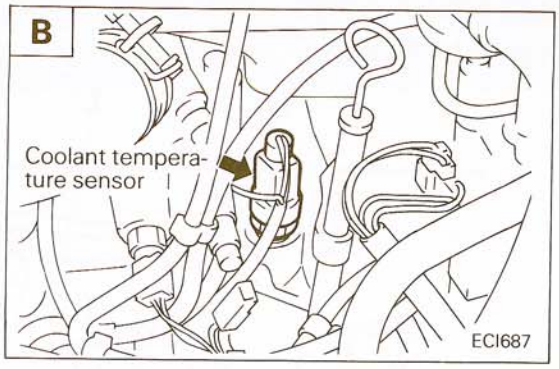

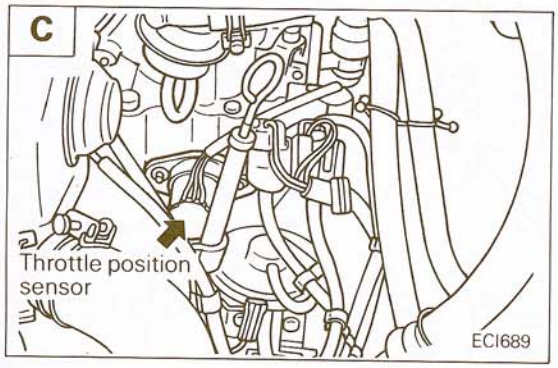

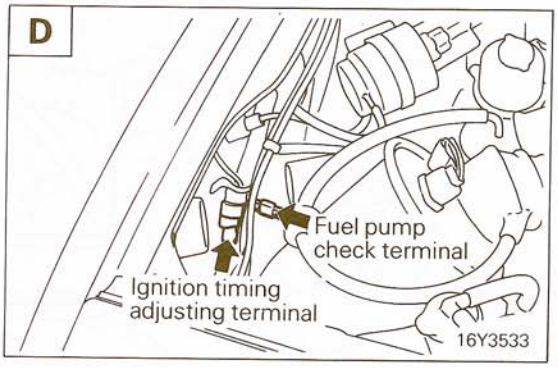

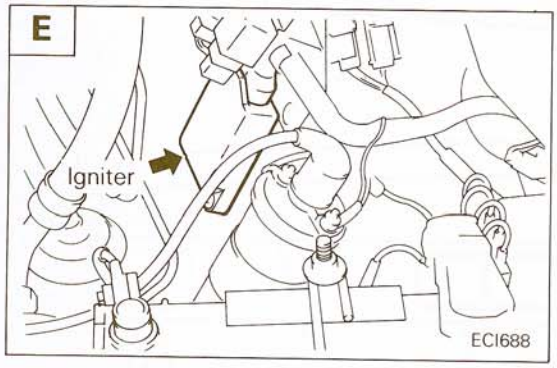

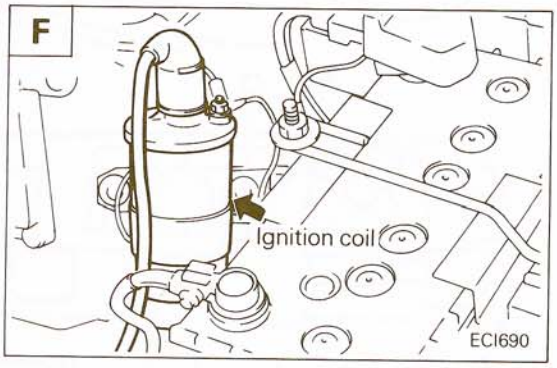

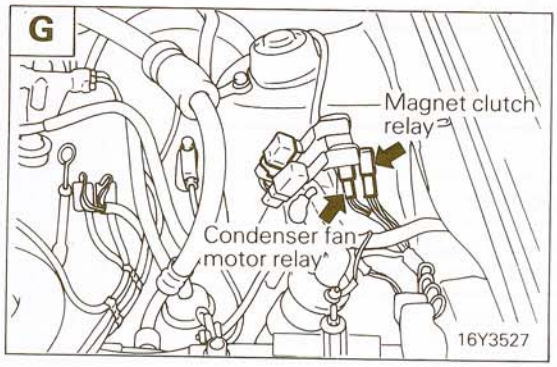

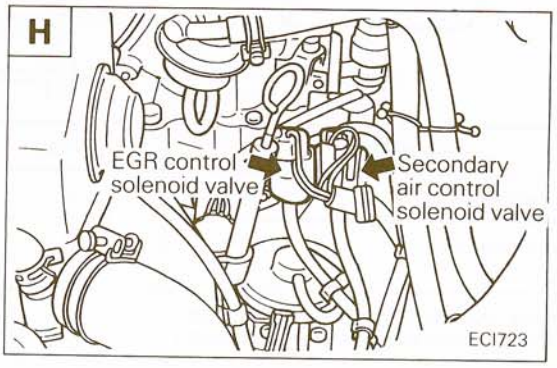

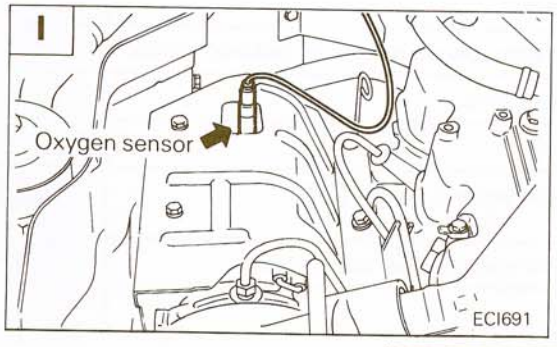

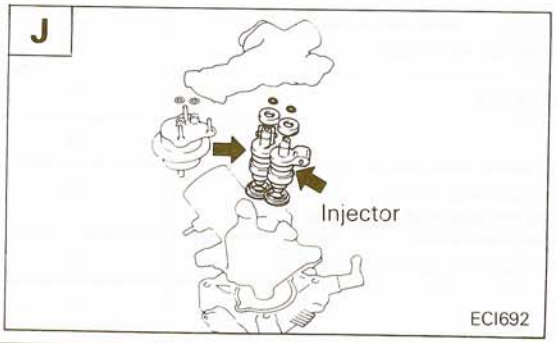

STB Revision

K

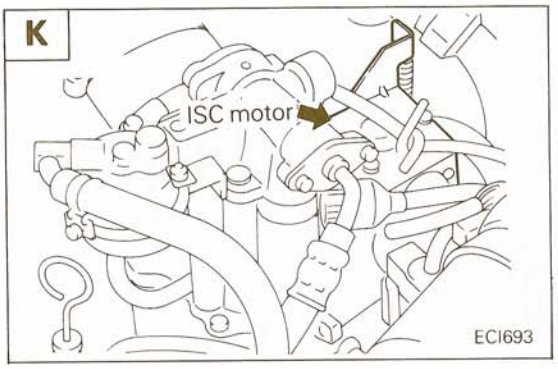

L

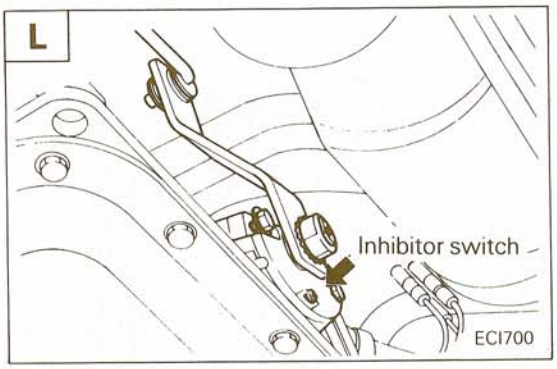

M

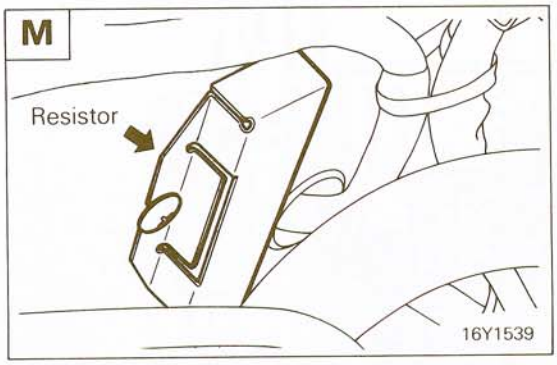

N

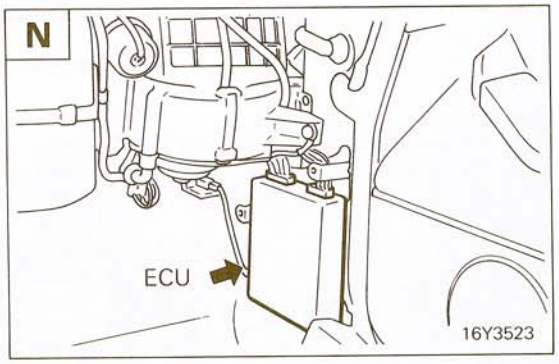

O

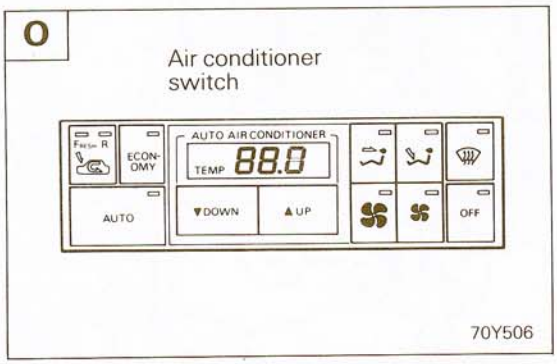

P

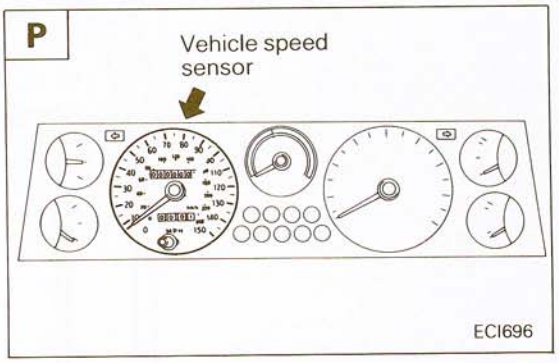

Q

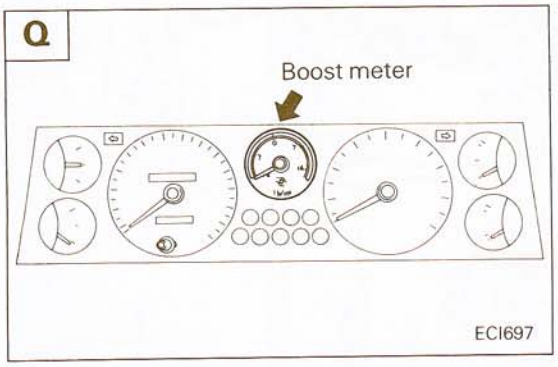

R

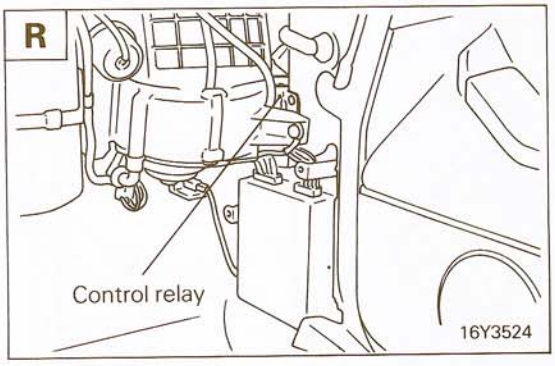

S

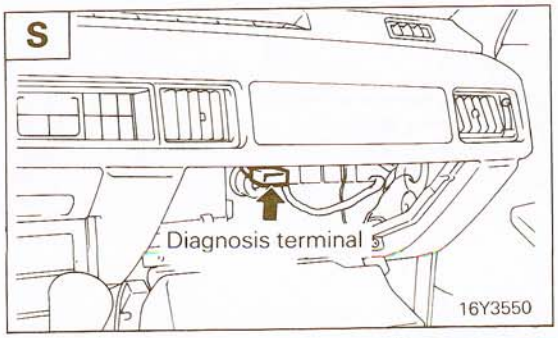

STB Revision

Vacuum Hose Piping Diagram – Without Intercooler

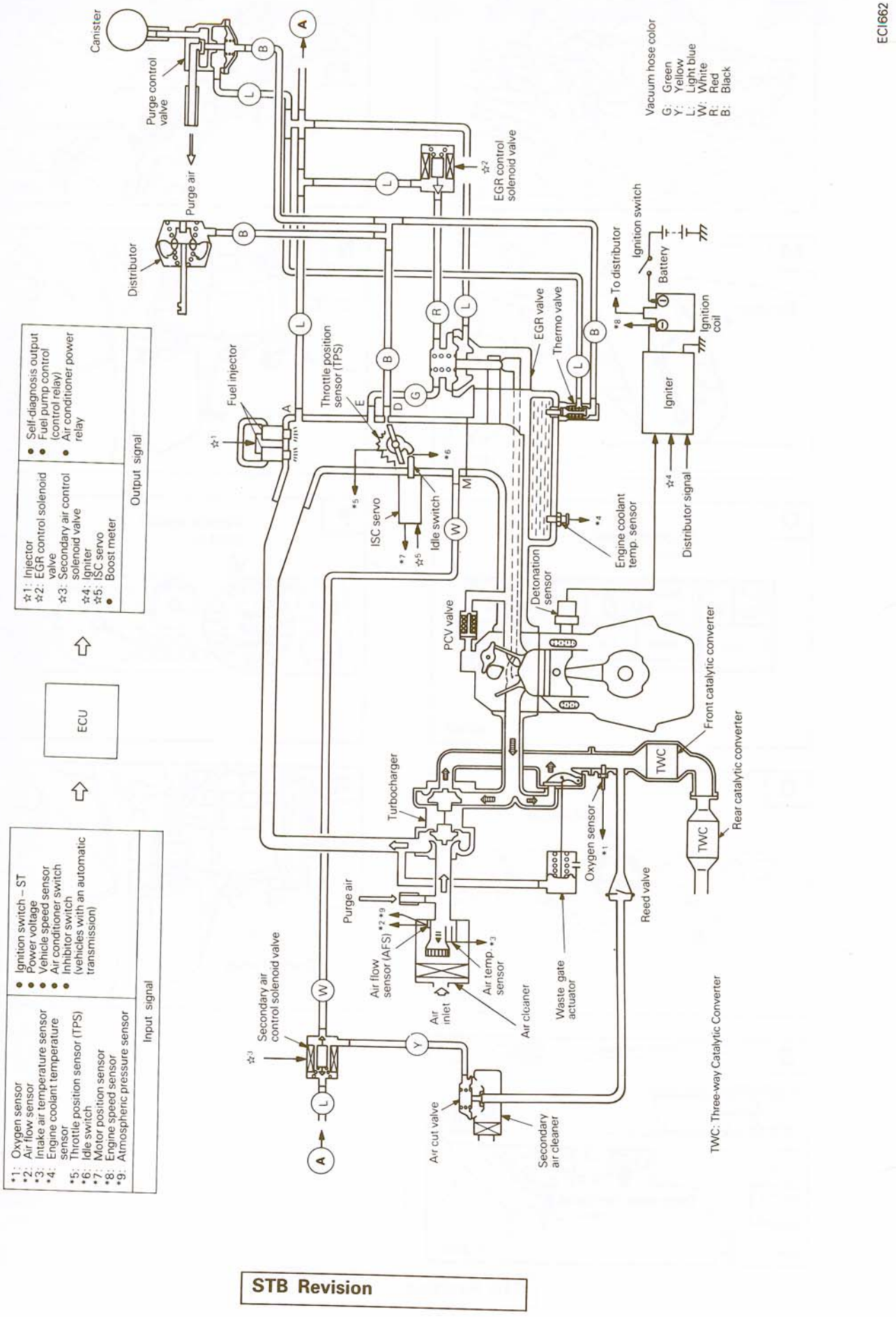

STB Revision

Vacuum Hose Piping Diagram – With Intercooler

Input signal		ECU	Output signal	
*1: Oxygen sensor *2: Air flow sensor *3: Intake air temperature sensor *4: Engine coolant temperature sensor *5: Throttle position sensor (TPS) *6: Idle switch *7: Motor position sensor *8: Engine speed sensor *9: Atmospheric pressure sensor	• Ignition switch – ST • Power voltage • Vehicle speed sensor • Air conditioner switch • Inhibitor switch (vehicles with an automatic transmission)	⇨	☆1: Injector ☆2: EGR control solenoid valve ☆3: Secondary air control solenoid valve ☆4: Igniter ☆5: ISC servo • Boost meter	• Self-diagnosis output • Fuel pump control (control relay) • Air conditioner power relay

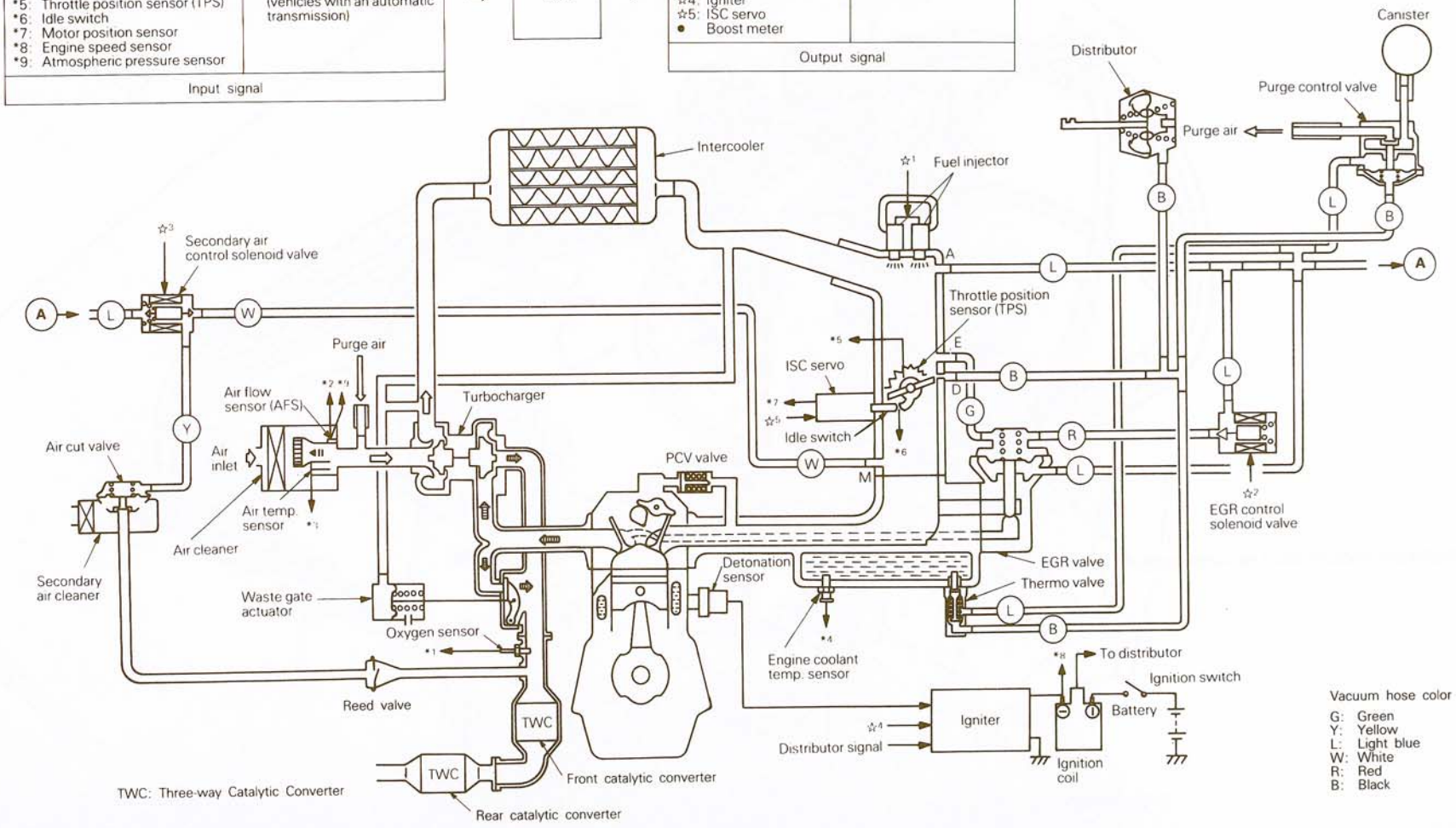

ECI663

Vacuum Hose Arrangement

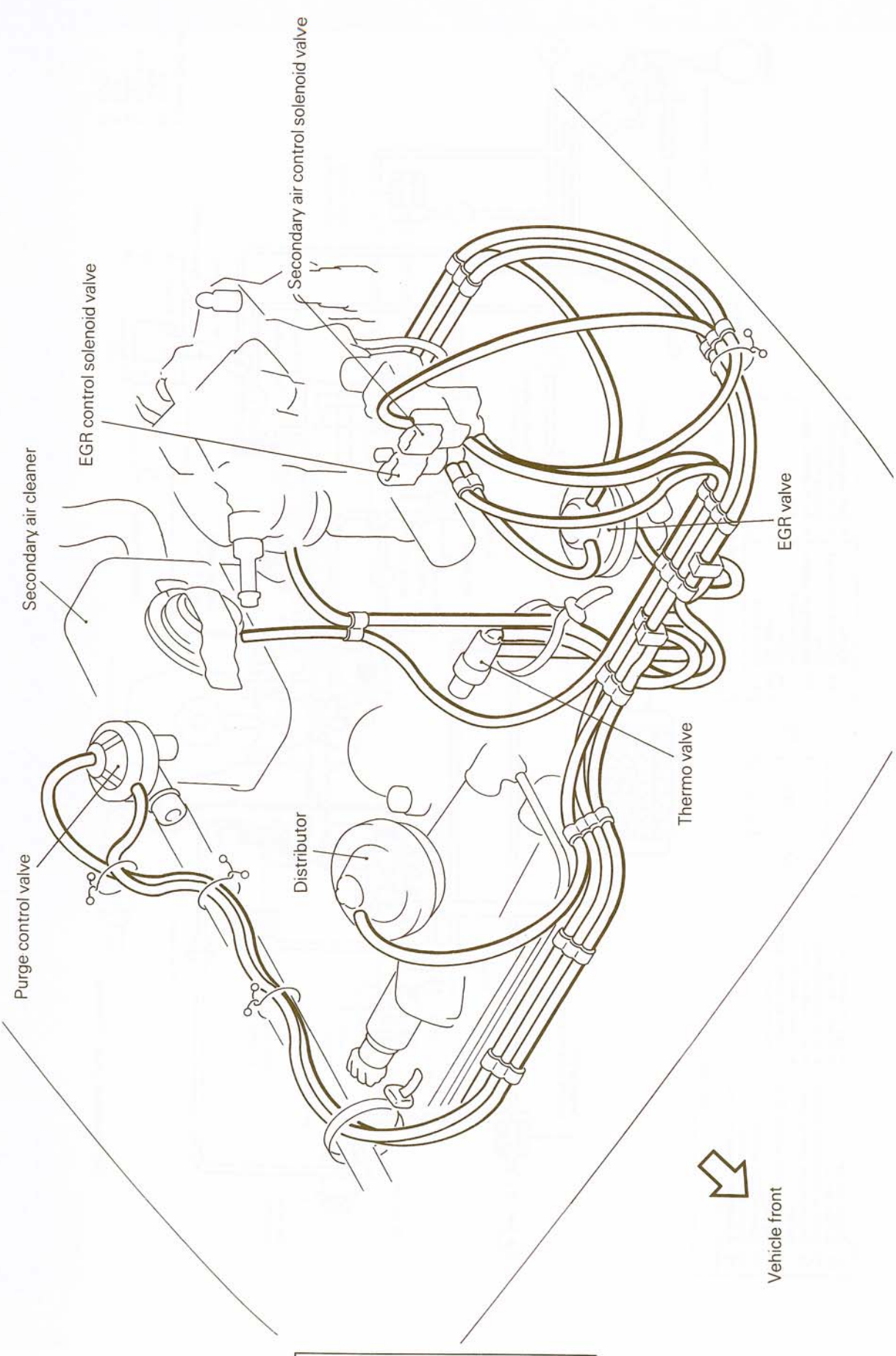

STB Revision

CHECK PROCEDURE (SELF-DIAGNOSIS) N14PCAA

PRECAUTIONS FOR OPERATION

(1) When battery voltage is low, no detection of failure is possible. Be sure to check the battery for voltage and other conditions before starting the test.
(2) Diagnosis item is erased if the battery or the ECU connector is disconnected. Do not disconnect the battery before the diagnosis result is completely read.
(3) To diagnose the oxygen sensor, warm up engine and drive a good distance. Do not turn off the ignition switch after driving. If ignition switch is turned off, the result in memory is erased.
(4) After check and correction are over, disconnect ground cable for 15 seconds or more from negative terminal of battery and connect it again to make sure that failure code is erased.

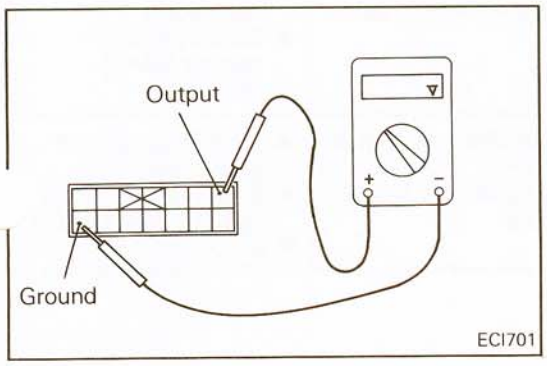

CHECK STEPS

NOTE
The memory of oxygen sensor (diagnosis code No. 1) is erased from ECU when the ignition switch is turned off. Therefore, to diagnose the oxygen sensor, drive the vehicle a good distance and keep the engine running.

(1) Connect an analog voltmeter to the self-diagnosis output harness connector located in the glove box.

(2) On turning the ignition switch to ON, the indication of ECU memory contents will start. If the system is in normal condition, pointer of voltmeter constantly indicates 12V. If any failure data is stored in memory, the pointer of voltmeter will deflect indicating abnormal items as described in "Indication Method". Abnormal item can be known from the number of pointer deflection which reflects the voltage waveform peculiar to the item. See "Diagnosis chart" for the voltage waveforms of different abnormal items.
After recording the abnormal item, check and repair each part according to the check items in "Diagnosis Chart".
(3) If the defective parts have been repaired, disconnect ground cable for 15 seconds or more from negative terminal of battery and connect it again to make sure that failure code has been erased.

DIAGNOSIS CHART

Mal-function No.	Diagnosis item	Self-diagnosis output pattern and output code	Problem	Check item
1	Oxygen sensor		Oxygen sensor signal does not change for 20 seconds or more in its feedback range.	• Wire harness and connector • Oxygen sensor • ECU
2	Ignition pulse (Engine speed sensor)		While cranking the engine, input of ignition signal is not applied to ECU for 3 seconds or more	• Wire harness and connector • Igniter • ECU • Distributor
3	Air flow sensor (AFS)		AFS output is 10 Hz or less while engine is idling.	• Wire harness and connector • AFS • ECU
5	Throttle position sensor (TPS)		• TPS output is 0.2V or less. • TPS output is 4V or higher for 1 second or more while engine is idling (Idle switch is on).	• Wire harness and connector • TPS • ECU
6	ISC motor position sensor		• MPS output voltage is 4.8V or more. • MPS output voltage is 0.2V or less.	• Wire harness and connector • Motor position sensor (MPS) • ECU
7	Engine coolant temperature sensor		• Engine coolant temperature sensor output is 4.5V or more. • Engine coolant temperature sensor output is 0.1V or less.	• Wire harness and connector • Engine coolant temperature sensor • ECU

INSPECTION OF CONTROL SYSTEM OPERATION

INSPECTION OF IGNITION TIMING CONTROL SYSTEM

Inspection of High Altitude and Cold Timing Control Function N14PIAA

Based on the information supplied by the atmospheric pressure sensor and engine coolant temperature sensor, the ECI control unit judges whether the vehicle is at high altitude and/or the engine is cold, and in case such condition(s) exists, the ECI control unit controls the igniter for timing advance of approximately 5° in crank angle. Check this function by the following procedure.

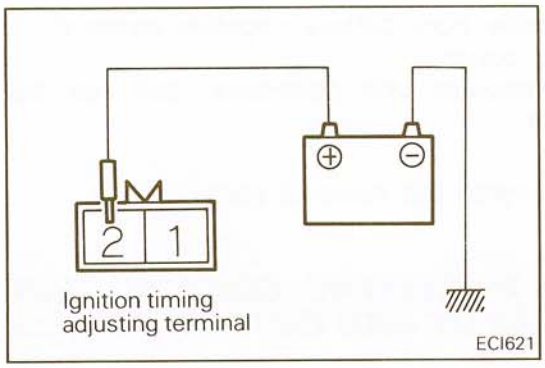

Inspection at Altitude of Lower than 1,200 m (3,900 ft.)

(1) Check the ignition timing for both when battery voltage is applied directly to the ignition timing adjusting terminal and when not.

Battery voltage	Ignition timing
When not applied	Base (10°BTDC at idle)
When applied	5° advanced (15°BTDC at idle)

Inspection at Altitude of 1,200 m (3,900 ft.) or Higher

(2) Check the ignition timing for both when the ignition timing adjusting terminal is grounded and when not.

Connector	Ignition timing
When not grounded	Base (15°BTDC at idle)
When grounded	5° retard (10°BTDC at idle)

(3) If the check result is out of specification, replace the igniter.

INSPECTION OF FUEL PUMP DRIVE CONTROL SYSTEM N14PKAA

(1) Disconnect the high tension cable from the ignition coil.
(2) Holding the fuel hose connected to the injection mixer with a hard, crank the engine and check that pulsation of fuel flow is felt to the hand.

NOTE
If no fuel flow pulsation is felt, check the ignition switch, control relay and fuel pump.

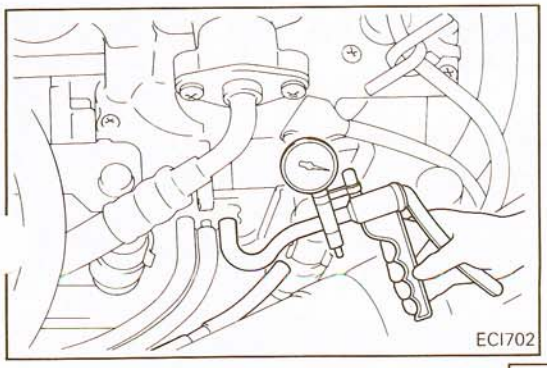

INSPECTION OF BOOST METER CONTROL SYSTEM N14PNAA

(1) Disconnect the vacuum hose (white stripe) from the injection mixer and connect a vacuum gauge to the nipple (vacuum nipple "M").
(2) Make road test and check that the boost meter indication nearly agrees with the vacuum gauge indication.
(3) If the indication deviates greatly, check the harness for open or short circuit and also check the boost meter, air flow sensor and engine speed sensor.

INSPECTION OF SECONDARY AIR CONTROL SYSTEM

N14POAA

Refer to GROUP 25 EMISSION CONTROL SYSTEMS.

INSPECTION OF EGR CONTROL SYSTEM

N14P

Refer to GROUP 25 EMISSION CONTROL SYSTEMS.

ELECTRONIC CONTROL UNIT (ECU) CONNECTOR REMOVAL AND INSTALLATION PROCEDURES

N14PBAA

(1) Disconnect the cable from battery negative terminal.
(2) Remove the ECU cover.
(3) Unlocking the computer unit connector, pull out the harness connector.

NOTE
For installation, reverse the removal steps.

INSPECTION OF ELECTRONIC CONTROL UNIT (ECU) ELECTRIC INPUT AND OUTPUT SIGNALS

N14PDBC

The electric system of ECI system can be quickly inspected and maintained if the electric input and output signals of ECU are checked by ECI checker and the component whose abnormality is indicated by the signal and the harness connected between ECU and the component is checked as well.

CHECK PROCEDURE (USING ECI CHECKER)

Using the special tools (harness connector and ECI checker), perform the ECI system checks by the following procedure.

Caution
Perform these checks after completion of all steps in the preceding "CHECK PROCEDURE (SELF-DIAGNOSIS)".

Check Steps

STEP 1

(1) Turn ignition switch to LOCK.
(2) Remove the large harness connector and small harness connector from the ECU.
(3) Set check switch of the ECI checker to OFF.
(4) Set select switch of the ECI checker to A.
(5) Connect white color connectors labeled "CHECKER" of the harness connector to the ECI checker connectors. Then connect harness connector to the ECU and harness connectors.
(6) Perform checks according to the "ECI System Check Procedure Chart – Step 1.

STEP 2

(7) Turn ignition switch to LOCK.
(8) Set check switch of the ECI checker to OFF.

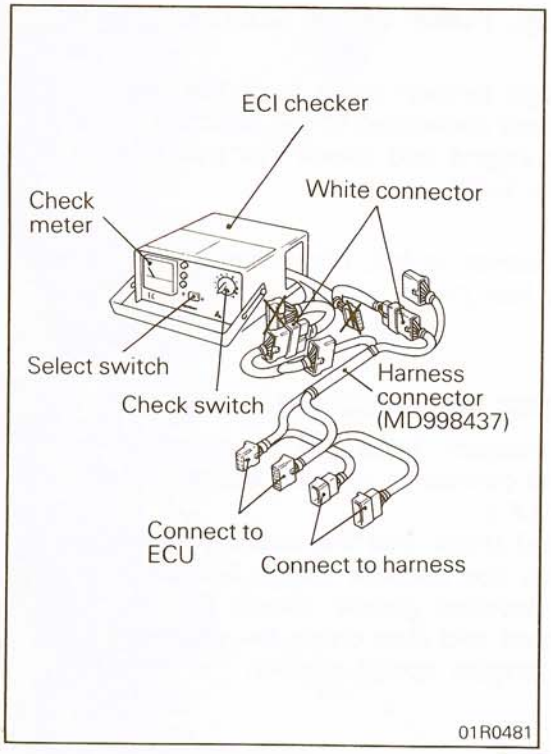

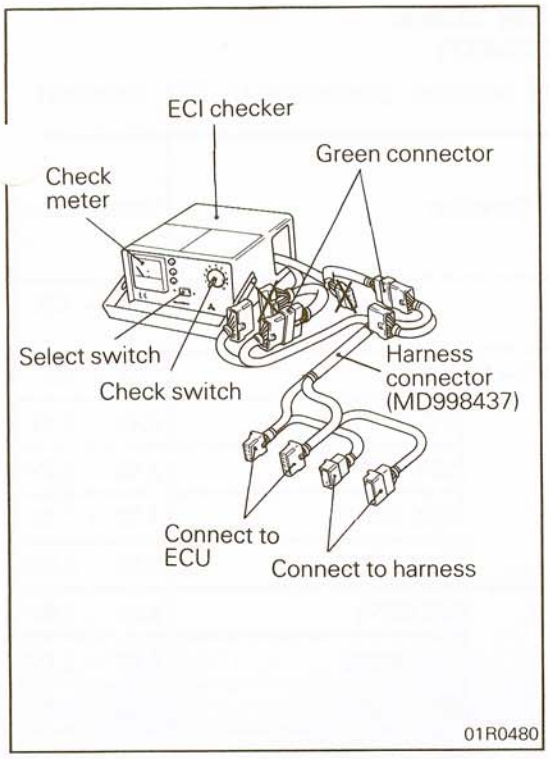

(9) Disconnect white color connectors labeled "CHECKER" of the harness connector from the ECI checker. Then connect green color connectors labeled "CHECKER" of the harness connector to the connectors of ECI checker.
(10) Perform checks according to the "ECI System Check Procedure Chart – Step 2".
(11) If checker shows any deviation from specifications, check the corresponding sensor and related electrical wiring. Repair or replace if necessary.
(12) After repair or replacement, recheck with the ECI checker to confirm that the repair has removed the problem.
(13) Set the ignition switch to LOCK.
(14) Set the check switch of the ECI checker to OFF.
(15) Disconnect the connectors of the ECI checker and the harness connector from the ECU and body side harness connectors. Make certain that the power supply has been removed from ECU for at least 15 seconds. This will erase the memory.
(16) Connect the body side harness connector to the ECU.
(17) After completion of the above test, perform a road test to be sure that the trouble has been eliminated.

ECI-SPI SYSTEM CHECK PROCEDURE CHART
(Use Harness Connector – MD998437)

STEP 1 (Connect white color connectors labeled "CHECKER" of harness connector to ECI checker)

ECI Checker Operation		Check Item	ECU Terminal # Checked	Condition		Test Specification
Select Switch	Check Switch					
"A"	1	Power supply	51	Ignition switch "LOCK" → "ON"		11V – 13V
	2	Ignition pulse	1	Ignition switch "LOCK" → "START"		4V – 10V
	3	Intake air temperature sensor	5	Ignition switch "LOCK" → "ON"	0°C (32°F)	3.4V – 3.6V
					20°C (68°F)	2.5V – 2.7V
					40°C (104°F)	1.7V – 1.9V
					80°C (176°F)	0.6V – 0.8V
	4	Engine coolant temperature sensor	6	Ignition switch "LOCK" → "ON"	0°C (32°F)	3.4V – 3.6V
					20°C (68°F)	2.5V – 2.7V
					40°C (104°F)	1.5V – 1.7V
					80°C (176°F)	0.5V – 0.7V
	5	Power supply for sensor	10	Ignition switch "LOCK" → "ON"		4.5V – 5.5V
	6	Throttle position sensor	15	Ignition switch "LOCK" → "ON" (Warm engine)	Accelerator fully closed	0.4V – 0.7V
					Accelerator fully opened	4.5V – 5.5V
	7	Motor position sensor	3	Ignition switch "LOCK" → "ON"	After 15 seconds	0.8V – 1.2V
	8	Idle position switch	7	Ignition switch "LOCK" → "ON"	Accelerator fully closed	0V – 0.6V
					Accelerator fully opened	8V – 13V
	9	Cranking signal	55	Ignition switch "LOCK" → "START"		Over 8V
	10	Vehicle speed sensor reed switch	19	Start engine and operate vehicle slowly in 1st or DRIVE range		0V – 0.6V ↑ (pulsates) ↓ Over 2V
	11	Air conditioner switch	56	Ignition switch "LOCK" → "ON"	Air conditioner switch "OFF"	0V – 0.6V
					Air conditioner switch "ON" *1	11V – 13V
	12	Inhibitor switch	58	Ignition switch "LOCK" → "ON"	At "P" or "N" range	0V – 0.6V
					At "D" range	11V – 13V

NOTE
*1: ON means compressor clutch engaged.

STEP 1

ECI Checker Operation		Check Item	ECU Terminal # Checked	Condition		Test Specification
Select Switch	Check Switch					
	1					
	2					
	3					
	4	Spark advance signal	13	Idling	Engine coolant temperature less than 35°C (95°F)	Over 5V
					Engine coolant temperature 35°C (95°F) or higher, altitude up to approx. 1,200 m (3,900 ft.)	0 – 0.6V
					Engine coolant temperature 35°C (95°F) or higher, altitude approx. 1,200 m (3,900 ft.) or above	Over 5V
"B"	5	Air flow sensor	2	Idling		2.2 – 3.2V
				3,000 rpm		
	6					
	7	EGR control solenoid valve	54	Hold engine at a speed less than 3,500 rpm after warming up		13V – 15V
				Hold engine at a speed 3,500 rpm or higher		0V – 0.6V
	8	Oxygen sensor	11	Hold engine at a constant speed above 1,300 rpm, after 30 seconds from start of warm engine		0V – 0.6V *2 ↑ (pulsates) ↓ 2V – 3V
	9					
	10					
	11					
	12					

NOTE
*2: Failure of parts other than the oxygen sensor can also cause deviation from the specifications. Therefore, check other parts related to air-fuel ratio control. (Refer to P.14-31.)

STEP 2 (Connect green color connectors labeled "CHECKER" of harness connector to ECI checker)

ECI Checker Operation		Check Item	ECU Terminal # Checked	Condition	Test Specificatic
Select Switch	Check Switch				
"A"	1				
	2	Secondary air control solenoid valve	20	Hold engine over 1,500 rpm, 15 seconds after start of warm engine	0V – 0.6V then 13V – 15V
	3				
	4				
	5				
	6				
	7				
	8				
	9				
	10				
	11				
	12				

ECU terminal



View from front as installed in ECU

ECI739

STEP 2

ECI Checker Setting		Check item	ECU Terminal # Checked	Condition		Test Specification
Select switch	Check switch					
"B"	1	ISC motor for extension	23	Idling	Air conditioner switch OFF → ON *1	Momentarily over 4V, then 0V – 2V *2
	2	ISC motor for retraction	12	Idling	Air conditioner switch ON → OFF *1	Momentarily over 4V, then 0V – 2V *2
	3	Air conditioner cutoff relay	24	Idling	Air conditioner switch OFF → ON *1	12V – 15V, then 0V – 0.6V
	4	Control relay	22	Ignition switch "LOCK" → "ON"		11V – 13V
				Idling		0V – 0.6V
	5					
	6	Boost meter	59	Idling		12V – 14V
				Quick acceleration from idling to above 2,000 rpm in "N" or "P" position		Slight drop
	7	Injector No. 1 pulse	60	Idling		12V – 14V
				Quick acceleration from idling to above 2,000 rpm in "N" or "P" position		Slight drop
	8					
	9	Detonation retard signal	61	Idling		Over 5V
				Quick acceleration from idling to above 2,000 rpm in "N" or "P" position		0V – 0.6V
	10					
	11	Injector No. 2 pulse	62	Idling		12V – 15V
				Quick acceleration from idling to above 2,000 rpm in "N" or "P" position		Slight drop
	12					

NOTE
*1: ON means compressor clutch engaged.
*2: Pointer indicates over 4V momentarily. If it is hard to read indication, repeat OFF → ON or ON → OFF operation of air conditioner switch several times. If the pointer of voltmeter deflects, ISC motor is normal.

Atmospheric Pressure Sensor Circuit Check

Terminal 16 is connected to atmospheric pressure sensor. Check the circuit with a voltmeter as indicated below (analogue or digital meter).

Check Item	ECU Terminal # Checked	Condition		Test Specification
Atmospheric pressure sensor	16	Ignition switch "LOCK → ON"	At sea level	3.8V – 4.2V
		Idling		

STB Revision

INSPECTION OF ECI SYSTEM COMPONENTS

N14QGAA

INSPECTION OF AIR FLOW SENSOR (AFS)

Check using the ECI checker. (Refer to P.14-64.)

NOTE
If the air flow sensor fails, the intake air volume cannot be measured and as a result, normal fuel injection control is no longer available. The vehicle can be run, however, by the backup function.

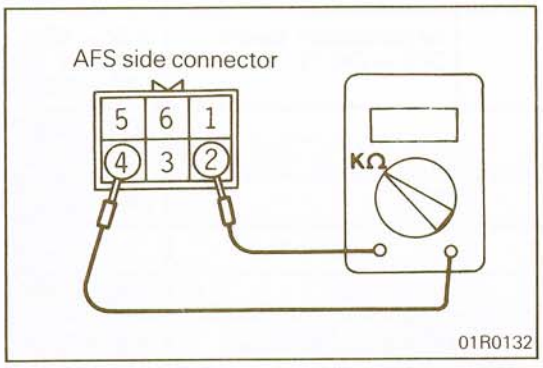

INSPECTION OF INTAKE AIR TEMPERATURE SENSOR

N14QHAA

(1) Disconnect the air flow sensor connectors.
(2) Measure resistance between terminals ② and ④.

Temperature °C (°F)	Resistance kΩ
0 (32)	6.0
20 (68)	2.7
80 (176)	0.4

(3) Measure resistance while heating the sensor using a hair drier.

Temperature °C (°F)	Resistance kΩ
Higher	Smaller

(4) If the value deviates from the standard value or the resistance remains unchanged, replace the air flow sensor assembly.

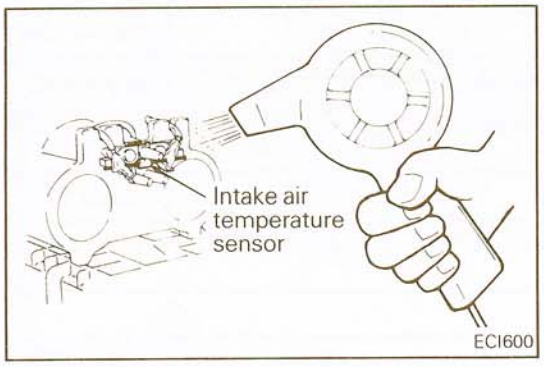

INSPECTION OF ENGINE COOLANT TEMPERATURE SENSOR

N14QABA

Inspection

(1) Remove engine coolant temperature sensor from the intake manifold.
(2) With temperature sensing portion of engine coolant temperature sensor immersed in hot water, check resistance. The sensor should be held with its housing 3 mm (0.12 in.) away from the surface of the hot water.

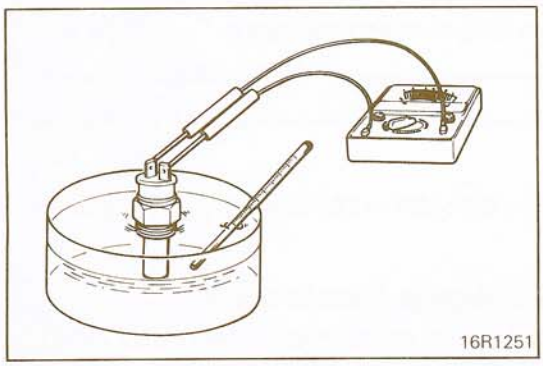

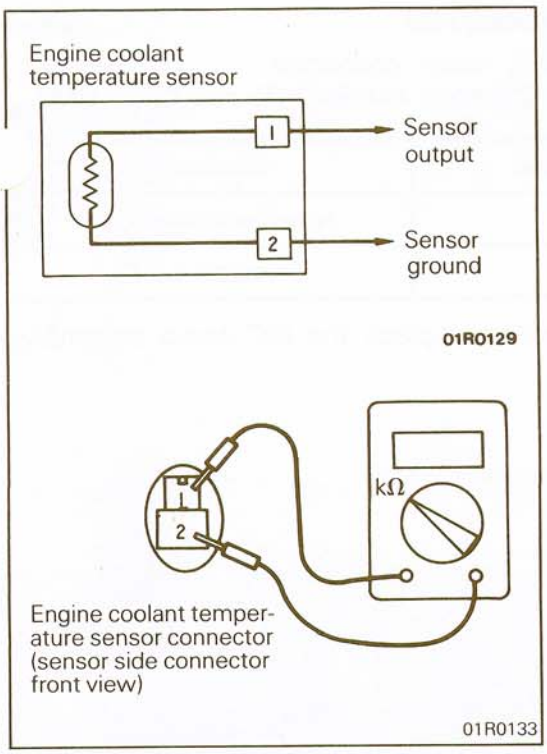

Temperature °C (°F)	Resistance kΩ
0 (32)	5.9
20 (68)	2.5
40 (104)	1.1
80 (176)	0.3

(3) If the resistance deviates from the standard value greatly, replace the sensor.

Installation

(1) Apply sealant (3M Nut Locking No.4171 or equivalent) to threaded portion.
(2) Install engine coolant temperature sensor and tighten it to specified torque.

Sensor tightening torque: 20 – 40 Nm (14 – 29 ft.lbs.)

(3) Fasten harness connectors securely.

INSPECTION OF THROTTLE POSITION SENSOR (TPS)

N14QBBA

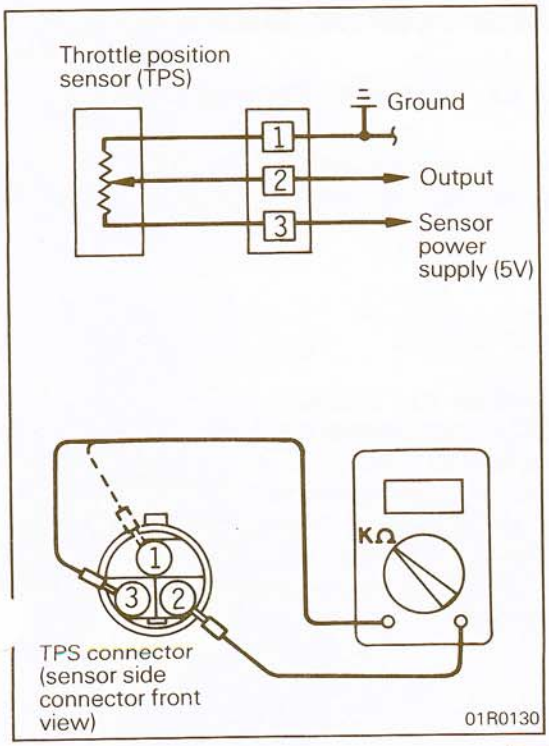

(1) Disconnect the throttle position sensor connector.
(2) Measure resistance between terminal ① (sensor GND) and terminal ③ (sensor power).

Standard value: 3.5 – 6.5 kΩ

(3) Connect a pointer type ohmmeter between terminal ① (sensor GND terminal) and terminal ② (sensor output terminal).
(4) Operate the throttle valve slowly from the idle position to the full open position and check that the resistance changes smoothly in proportion with the throttle valve opening angle.

NOTE
The resistance changes within the range from approx. 0.5 kΩ to the value measured at step 2.

(5) If the resistance is out of specification, or fails to change smoothly, replace the TPS.

TPS installation torque: 1.5 – 2.5 Nm (1.1 – 1.8 ft.lbs.)

NOTE
For the throttle position sensor adjusting procedure, refer to P.14-34.

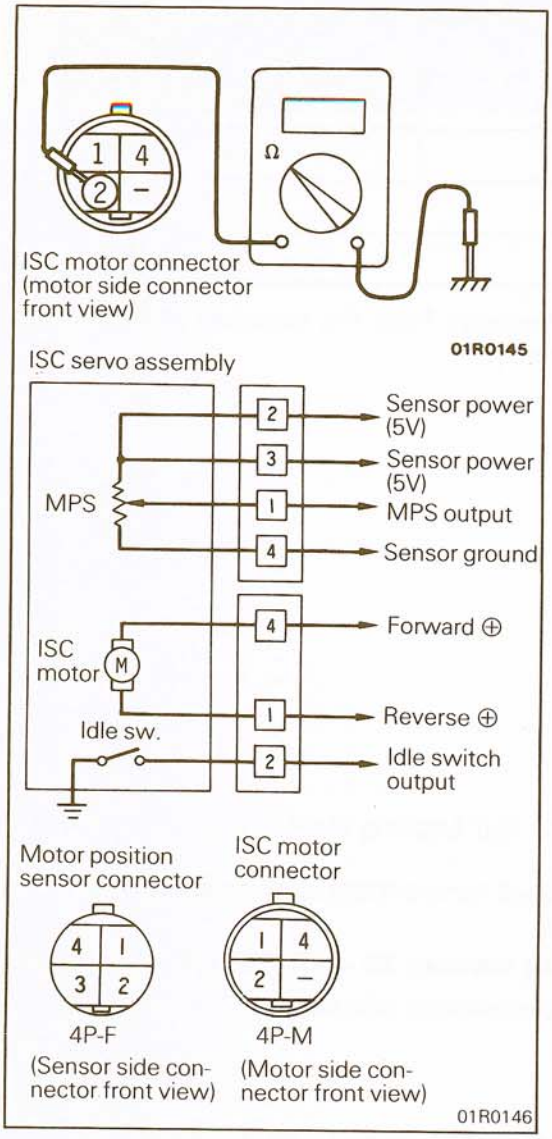

INSPECTION OF IDLE SWITCH

N14QKAA

(1) Disconnect the ISC motor connector.
(2) Check continuity between terminal ② and body GND.

Accelerator pedal	Continuity
Depressed	Non-conductive (∞ Ω)
Released	Conductive (0 Ω)

(3) If out of specification, replace the ISC servo assembly.

INSPECTION OF MOTOR POSITION SENSOR (MPS)

N14QLAA

Use the ECI checker for inspection. (Refer to P.14-64.)

NOTE
Inspection of change on output voltage of MPS can be inspected by moving the ISC motor as follows.

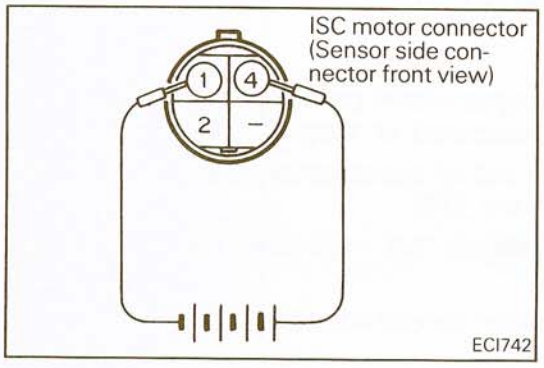

(1) Turn the ignition switch to "LOCK".
(2) Disconnect the ISC motor connector.
(3) Turn the ignition switch to "ON". (Do not run the engine.)
(4) Connect 6V DC (four dry cells) between terminals ① and ④ of the ISC motor connector to operate the ISC motor (extend/retract), and make sure that the MPS output voltage changes smoothly between approximately 0.5 and 5 V.

STB Revision

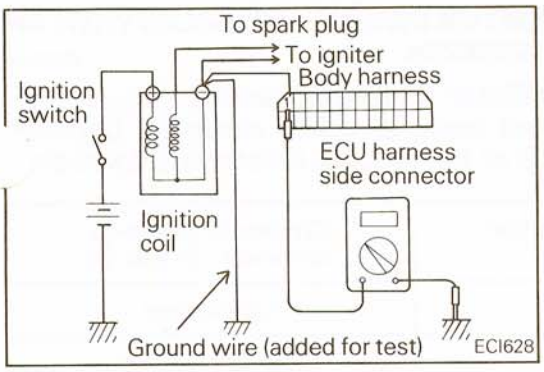

INSPECTION OF ENGINE SPEED SENSOR (IGNITION COIL ⊖ TERMINAL) N14QCBA

Check that there is continuity between the ignition coil ⊖ terminal and the electronic control unit (ECU) terminal No. 1.

NOTE
Shake the harness connector to check for lurking open circuit.

INSPECTION OF OXYGEN SENSOR N14QDBA

Caution
1. **Before checking, warm up the engine until engine coolant temperature reaches 85 to 95°C (185 to 205°F).**
2. **Use an accurate digital voltmeter.**

(1) Disconnect the oxygen sensor connector and connect a voltmeter to the oxygen sensor connector.

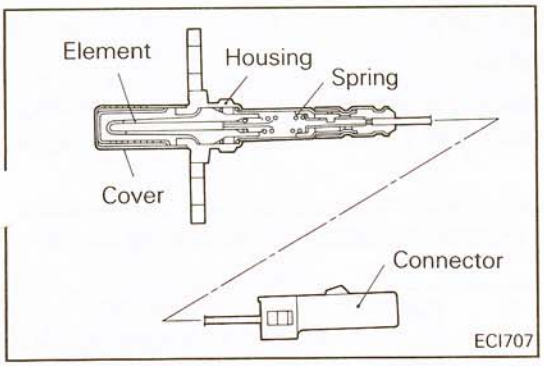

(2) While repeating engine racing, measure the oxygen sensor output voltage.

Engine	Oxygen sensor output voltage	Remarks
Race	Approx. 1V	Make air-fuel mixture rich by accelerator operation

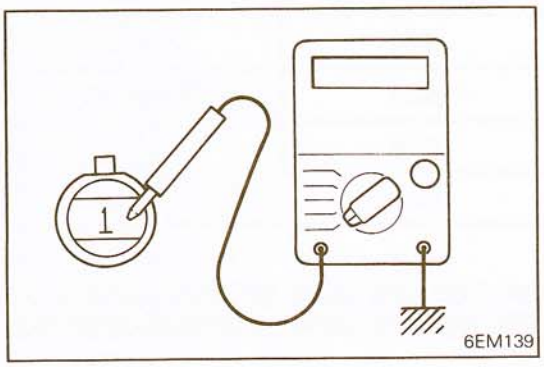

NOTE
For removal and installation of the oxygen sensor, refer to GROUP 11 INTAKE AND EXHAUST SYSTEM.

Oxygen sensor installation torque:
40 – 50 Nm (29 – 36 ft.lbs.)

INSPECTION OF VEHICLE SPEED SENSOR N14QEBA

Refer to GROUP 8 ELECTRICAL.

INSPECTION OF AIR CONDITIONER SWITCH N14QQAA

Refer to GROUP 24 HEATERS AND AIR-CONDITIONING.

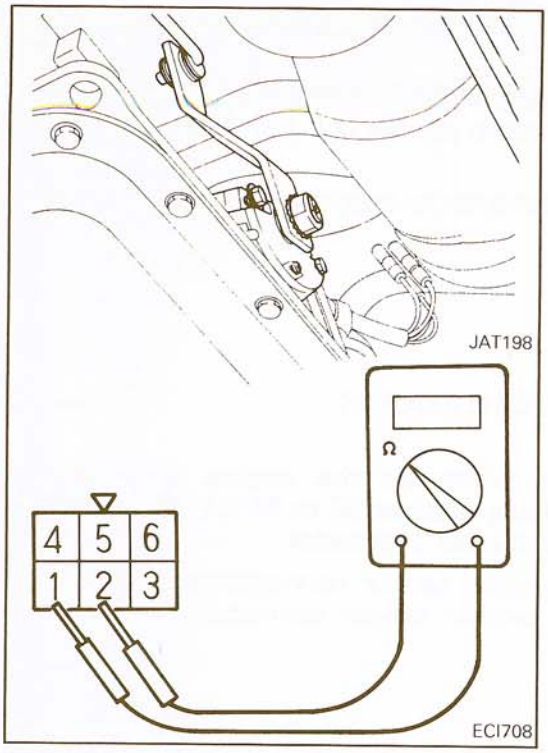

INSPECTION OF INHIBITOR SWITCH – VEHICLES WITH AN AUTOMATIC TRANSMISSION

N14QRAA

(1) Disconnect the inhibitor switch connector.
(2) Operate the control lever to check continuity between terminals ① and ② of the inhibitor switch side connector.

Control lever position	Continuity between terminals ① and ②
P, N	Conductive
R	Non-conductive

(3) If the check result is not as specified, adjust the inhibitor switch.
Refer to GROUP 21 TRANSMISSION for adjusting procedure.

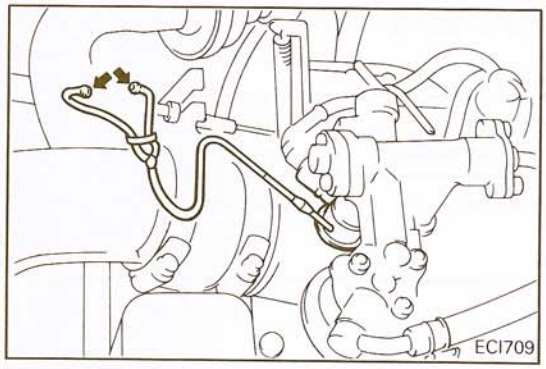

INSPECTION OF INJECTORS

N14QTAC

Operation Sound Check

Using a sound scope, check operation sound (tick, tick). Check that the sound is produced at shorter intervals as the engine speed increases.

Engine state	Injector connector color	Operating sound
Cranking	Gray	Heard
	Blue	Not heard
Idling	Gray	Heard
	Blue	Not heard
Racing	Gray	Heard
	Blue	

Caution
Check carefully. Other injectors may produce sound as they operate even if the injector under checking does not operate.

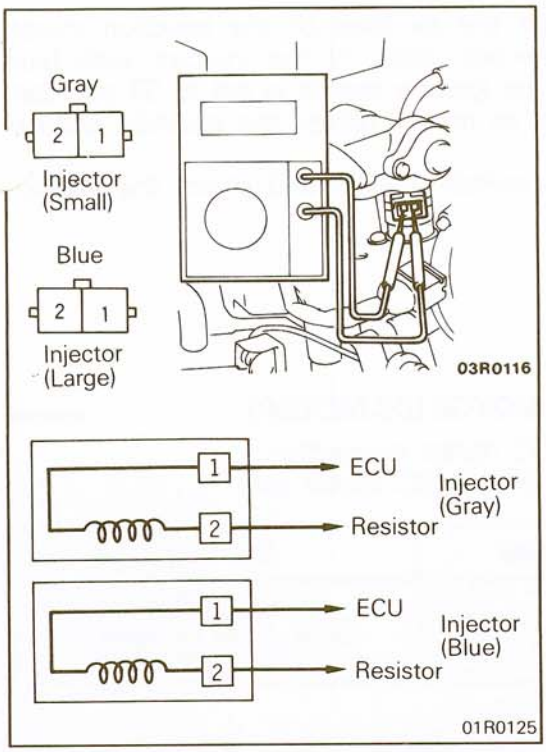

Measurement of Resistance between Terminals

(1) Disconnect the injector connector.
(2) Measure resistance between terminals.

Standard value: 2 – 3 Ω [at 20°C (68°F)]

(3) Install the injector connector.

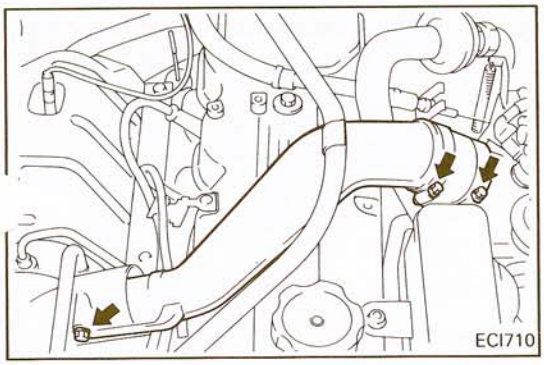

Inspection of Injection State

(1) Remove the air intake pipe.
(2) Disconnect the high tension cable from the ignition coil.

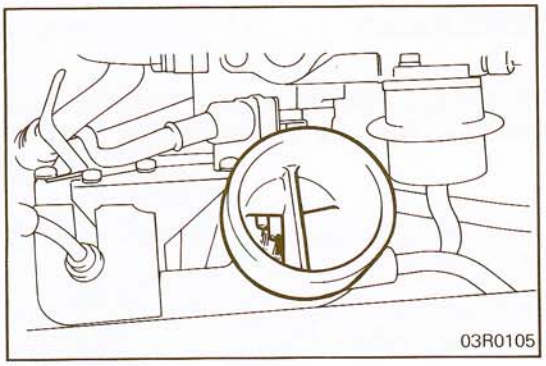

Inspection of Injector with Gray Connector

(3) Observing through the air inlet of the injection mixer, visually check injection state of the injector with gray connector when the ignition switch is set to ST position. Judge the injector as normal unless the injection state is very poor.
(4) Turn the ignition switch to OFF and check the injector nozzle for leaks.

Inspection of Injector with Blue Connector

(5) Disconnect the injector harness of the blue connector.
(6) Connect the harness connected to the injector having gray connector to the injector having blue connector.

Caution
Connect the harness with adequate slackness so that undue tension will not act on the harness when the engine is cranked.

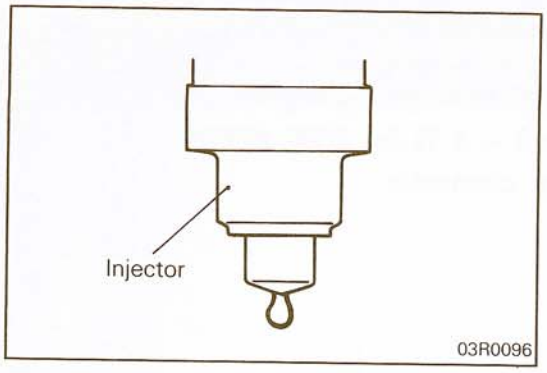

(7) Observing through the air inlet of the injection mixer, visually check injection state of the injector with blue connector when the ignition switch is set to ST position. Judge the injector as normal unless the injection state is very poor.
(8) Turn the ignition switch to OFF and check the injector nozzle for leaks.

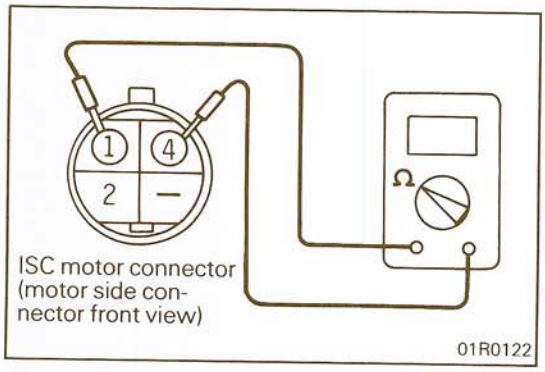

INSPECTION OF ISC MOTOR (DC MOTOR) N14QUAA

(1) Disconnect the ISC motor connector.
(2) Check continuity of the ISC motor coil.

Measuring terminals	Continuity
① – ④	Conductive [5 to 11 Ω resistance at 20°C (68°F)]

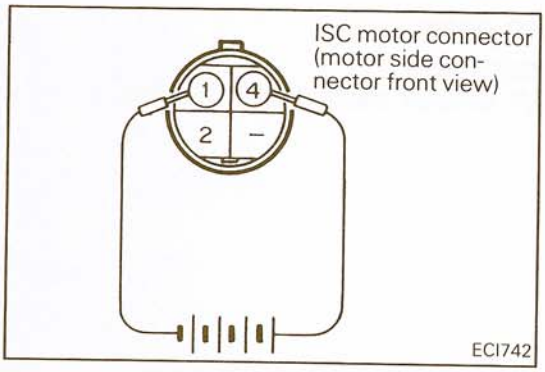

(3) Connect 6V DC (four dry cells) between terminals ① and ④ of the ISC motor connector and check that ISC servo operates.
(4) If not, replace ISC servo as an assembly.

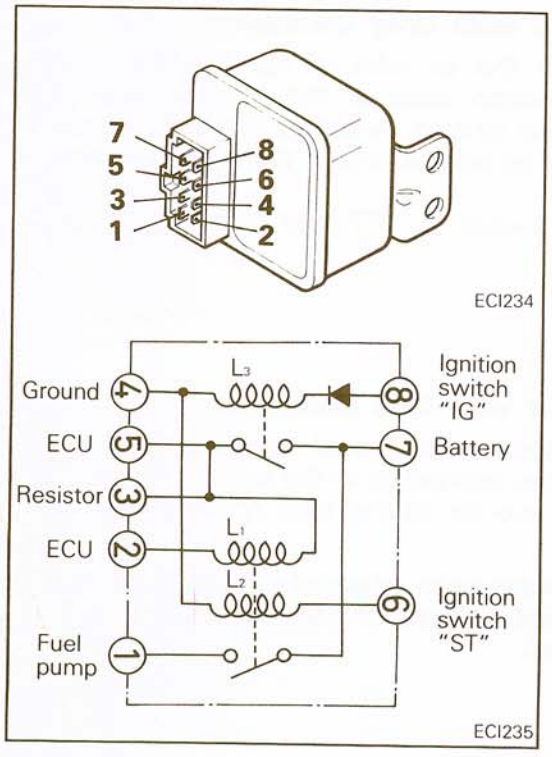

INSPECTION OF CONTROL RELAY N14QYAA

Caution
When applying battery voltage directly, make sure that it is applied to correct terminal. Otherwise, the relay could be damaged.

NOTE
Failure of the control relay prevents power supply to the fuel pump, injectors and ECU, resulting in start failure.

(1) Check continuity between terminals for both when the relay coil is energized and when not.

NOTE
In the following tables, the arrows indicate direction of current flow.
Confirm circuit tester polarity before checking continuity.

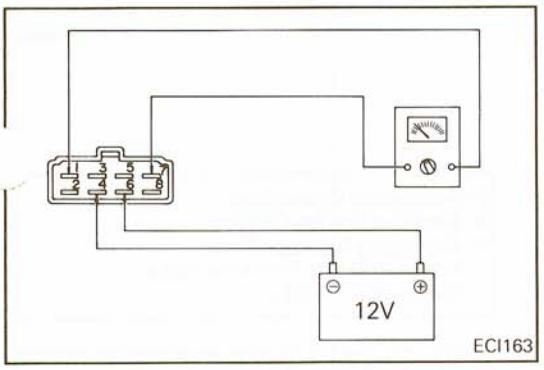

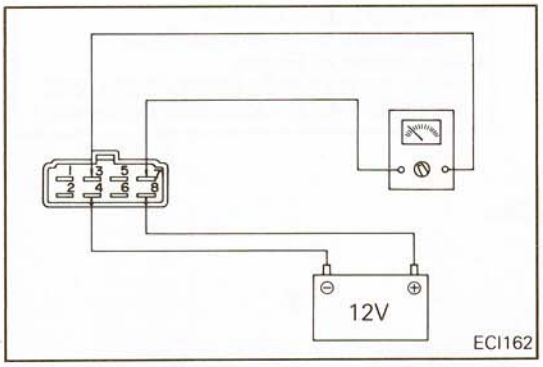

① Coils L_1 and L_2

Condition	Measuring terminals	Continuity
Not energized	①–⑦	Non-conductive (∞ Ω)
	②–⑤	Conductive (approx. 95 Ω)
	②–③	
	⑥–④	Conductive (approx. 35 Ω)
Energized	①–⑦	Conductive (0 Ω)

NOTE
"Energized" means voltage applied across terminals ⑥ and ④.

② Coil L_3

Condition	Measuring terminals	Continuity
Not energized	③–⑦	Non-conductive (∞ Ω)
	④→⑧	Non-conductive (∞ Ω)
	④←⑧	Conductive (0 Ω)
Energized	③–⑦	Conductive (0 Ω)

NOTE
"Energized" means voltage applied across terminals ⑧ and ④.

(2) If the result is not satisfactory, replace the control relay.

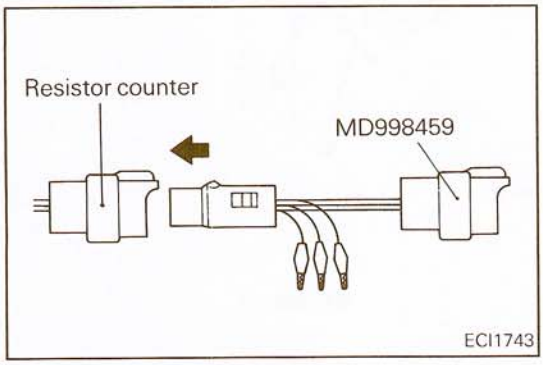

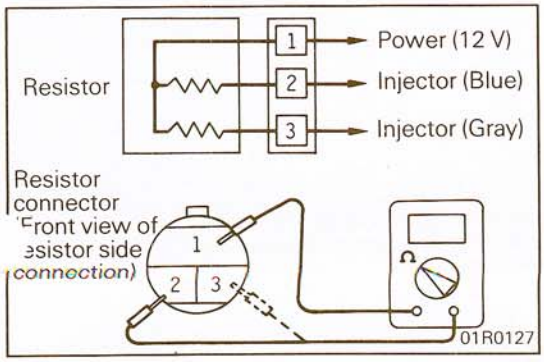

INSPECTION OF RESISTOR N14QZAA

(1) Disconnect the harness connector of the resistor.
(2) Connect the special tool (Harness Connector) to the resistor side connector of the disconnected connector.
(3) Measure resistance between terminals.

Caution
Measure quickly before the resistor temperature rises.

Measuring terminals	Resistance
① – ②	5.5 – 6.5 Ω [at 20°C (68°F)]
① – ③	

(4) If out of specification, replace the resistor.

INSPECTION OF AIR CONDITIONER RELAY N14RAAA

Refer to GROUP 24 HEATERS AND AIR-CONDITIONING.

INJECTION MIXER

N14NA- -

REMOVAL AND INSTALLATION

Pre-removal Operation
- Draining Engine Coolant
- Releasing Residual Pressure from Fuel High Pressure Hose (Refer to P.14-39.)

Post-installation Operation
- Charging Engine Coolant
- Adjustment of Accelerator Cable
- Adjustment of Engine (Refer to GROUP 0 LUBRICATION AND MAINTENANCE – Maintenance Service.)

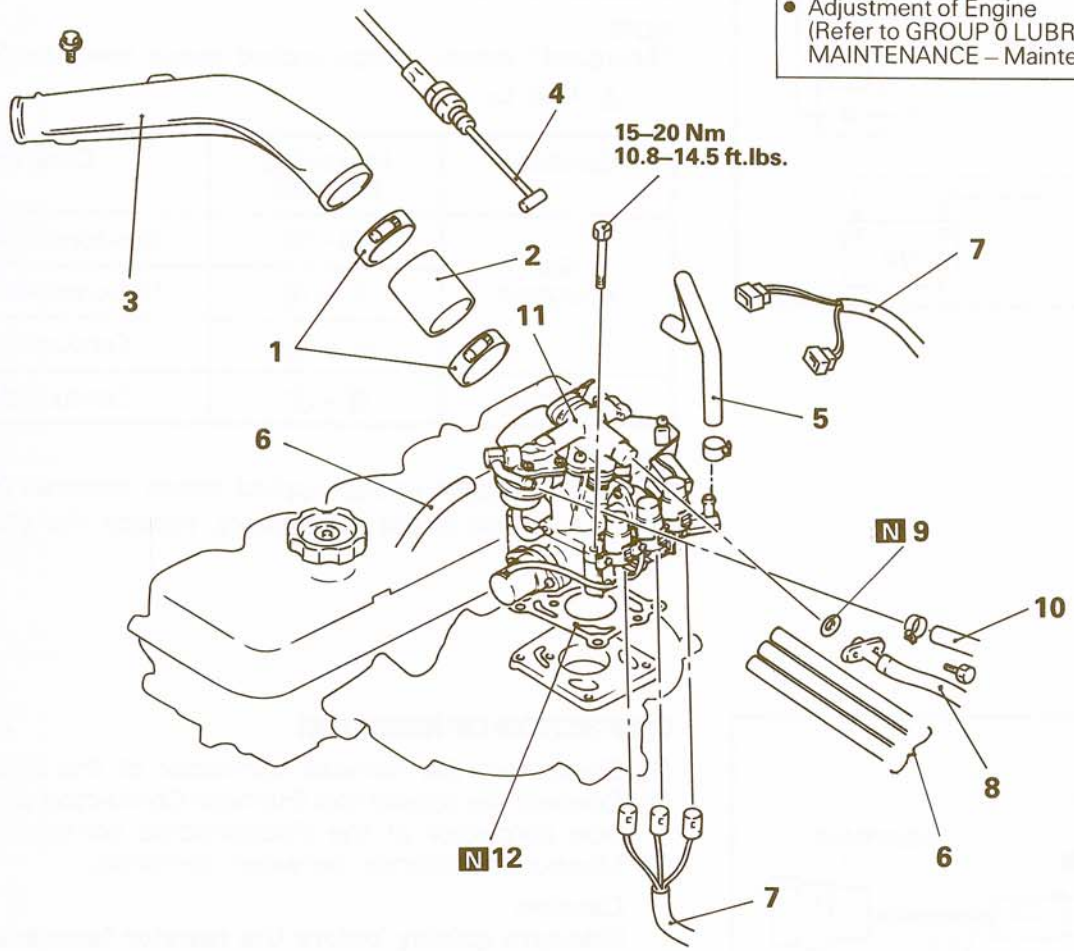

03Y753

Removal steps

1. Hose clamp
2. Air hose
3. Air intake pipe
4. Accelerator cable connection
5. Water hose connection
6. Vacuum hose connection
7. Engine control wiring harness connection
- ◆◆ 8. Fuel high pressure hose connection
9. O-ring
10. Fuel return hose connection
11. Injection mixer
12. Gasket

NOTE
(1) Reverse the removal procedures to reinstall.
(2) ◆◆: Refer to "Service Points of Installation"
(3) N: Non-reusable parts

STB Revision

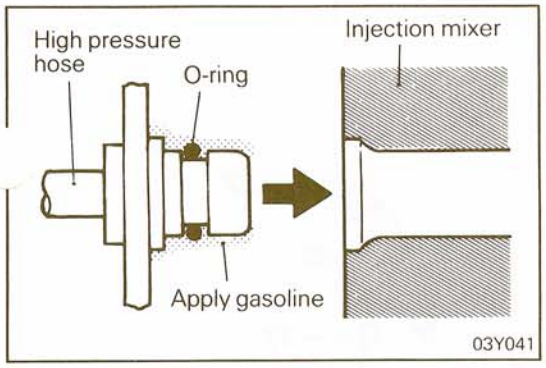

SERVICE POINT OF INSTALLATION N14NDA

8. INSTALLATION OF FUEL HIGH PRESSURE HOSE

When connecting the fuel high pressure hose to the injection mixer, coat the hose union with gasoline and insert using care not to cause damage to the O ring.

INJECTION MIXER

N14NE- -

DISASSEMBLY AND REASSEMBLY

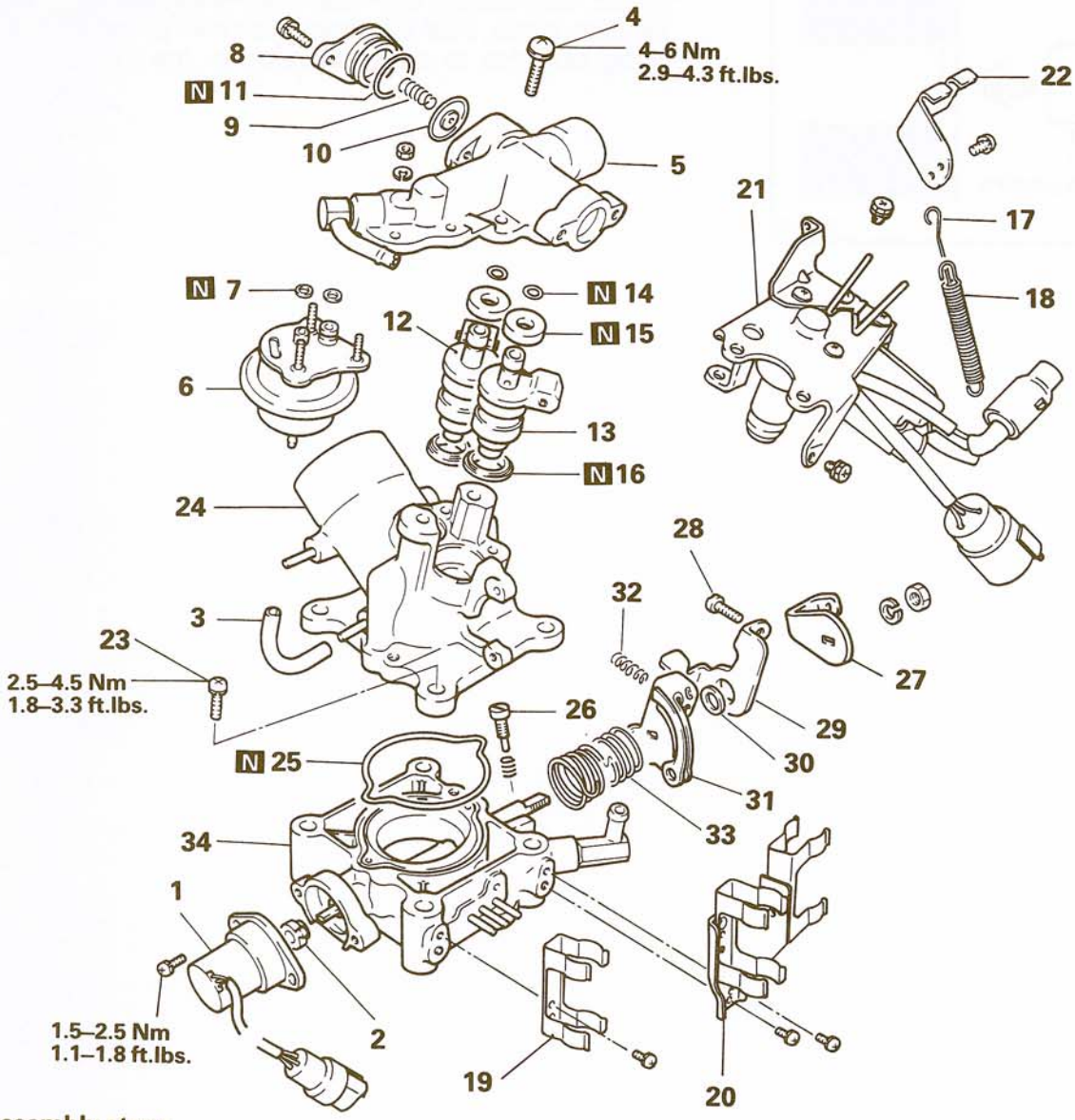

Disassembly steps

◆◆ ◆◆ 1. Throttle position sensor (TPS)
2. Joint
3. Hose
◆◆ 4. Screw
◆◆ 5. Injector holder
◆◆ 6. Fuel pressure regulator
7. O-ring
8. Pulsation damper cover
9. Spring
◆◆ 10. Diaphragm
11. O-ring
◆◆ ◆◆ 12. Injector
◆◆ ◆◆ 13. Injector
14. O-ring
15. Collar
◆◆ 16. Seal ring
17. Damper spring
18. Return spring
19. Connector bracket
20. Connector bracket
◆◆ 21. ISC servo assembly
22. Throttle cable bracket
23. Screw
24. Mixing body
◆◆ 25. Seal ring
26. Throttle valve set screw (fixed SAS)
27. Return lever
28. Adjusting screw
29. Free lever
30. Ring
31. Throttle lever
32. Spring
33. Return spring
34. Throttle body

NOTE
(1) Reverse the disassembly procedures to reassemble.
(2) ◆◆: Refer to "Service Points of Disassembly".
(3) ◆◆: Refer to "Service Points of Reassembly".
(4) N: Non-reusable parts.

ECI711

SERVICE POINTS OF DISASSEMBLY N14NFAA

Caution

1. **When loosening a Phillips screw which has been firmly tightened, use a Phillips screwdriver that is an exact fit for the screw.**
2. **Do not remove the throttle valve.**
3. **Do not remove the injector holder screen.**
4. **Do not remove the fuel return nipple.**

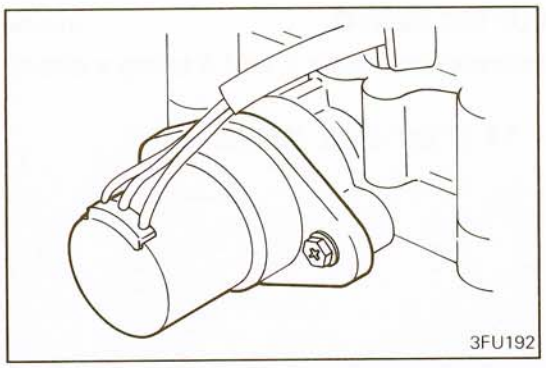

1. REMOVAL OF THROTTLE POSITION SENSOR (TPS)

Do not remove the throttle position sensor unless it requires replacement.

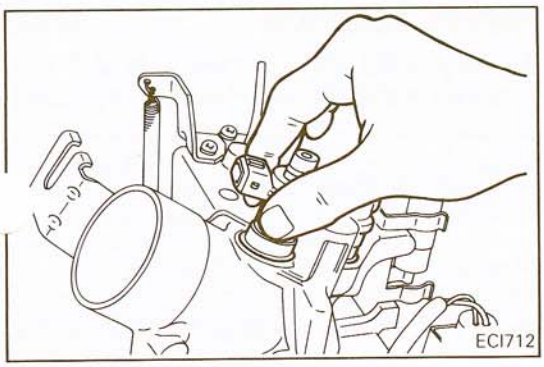

12. 13. REMOVAL OF INJECTOR

(1) Do not hold the injector by pliers when removing it.
(2) After removal of an injector, close the fuel inlet by seal tape, etc. to prevent entry of foreign matter.

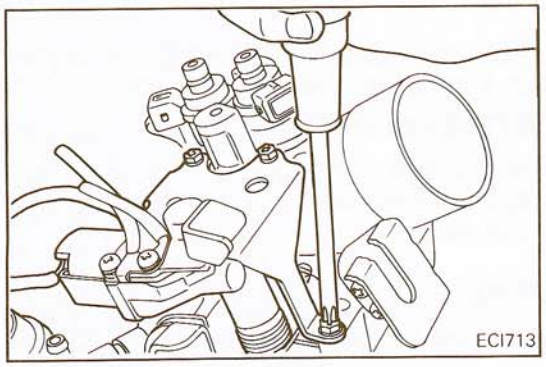

21. REMOVAL OF ISC SERVO ASSEMBLY

(1) Do not remove the ISC servo assembly unless it requires replacement.
(2) Do not disassemble the ISC servo assembly.

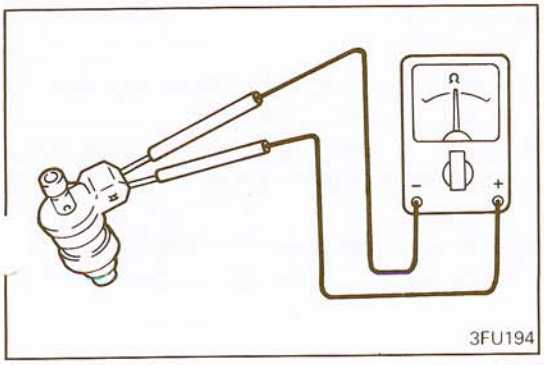

INSPECTION N14NGAA

INJECTORS

(1) Measure resistance of injector coils using a circuit tester.
Standard value: 2 – 3 Ω [at 20°C (68°F)]
(2) If the resistance is out of specification, replace the injector.

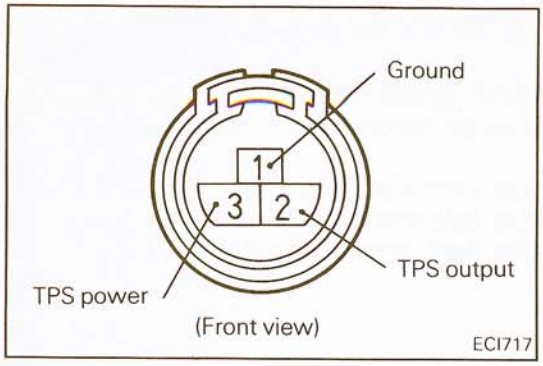

CONTINUITY CHECK OF THROTTLE POSITION SENSOR (TPS) N14NJAA

(1) Measure resistance between terminals 1 and 3 of the throttle position sensor using a circuit tester.

Standard value: 3.5 – 6.5 kΩ

(2) Check sensor body for cracks and damages.

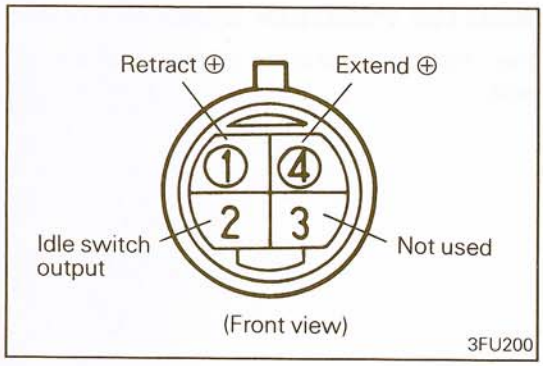

CONTINUITY CHECK OF ISC SERVO N14NJBA

Measure resistance between terminals 1 and 4 using a circuit tester.

Standard value: 5 – 11 Ω [at 20°C (68°F)]

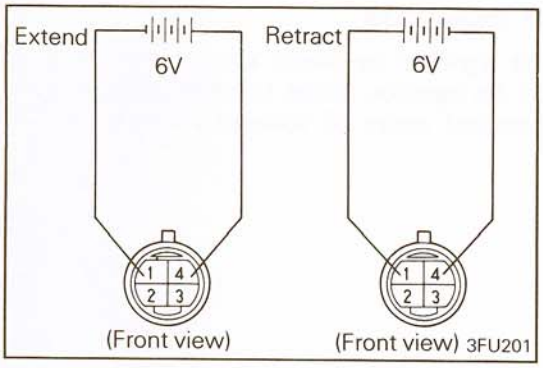

INSPECTION OF ISC SERVO OPERATION N14NJCA

(1) Connect 6V DC (four dry cells) to terminals 1 and 4 and check that the ISC servo extends and retracts by itself.

	ISC servo motion
When terminal 1 is ⊕	Retracts
When terminal 4 is ⊕	Extends

(2) If the ISC servo does not move, replace the ISC servo assembly.

NOTE
Apply only a 6V DC or lower voltage. Application of higher voltage could cause locking of the servo gears.

INSPECTION OF THROTTLE VALVE SHAFT N14NGBA

Check operation of the throttle valve shaft. If it does not operate smoothly and lightly, wash well and then apply a light coat of engine oil to the shaft.

CLEANING OF PARTS N14NHAA

(1) Clean all parts. Do not use detergent to clean the following parts:
- Throttle position sensor
- ISC servo

Immersion of these parts in detergent causes damage to insulation. Only wipe them with cloth.

(2) When cleaning the injectors and fuel pressure regulator, close tightly the fuel inlet and outlet by sealing tape and use clean detergent.

(3) Check the vacuum port and passage for clogging. Blo compressed air in the vacuum and fuel passages to clean them.

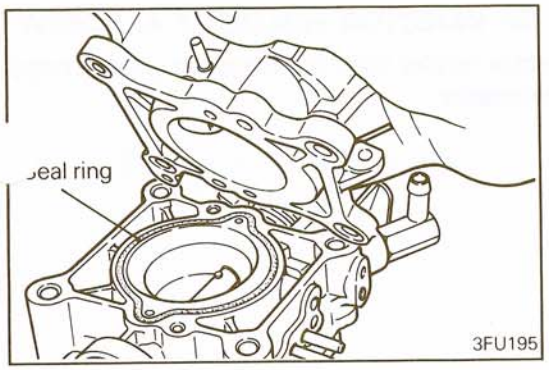

SERVICE POINTS OF REASSEMBLY N14NIAA

25. INSTALLATION OF SEAL RING

Make sure that the seal ring does not protrude from the groove.

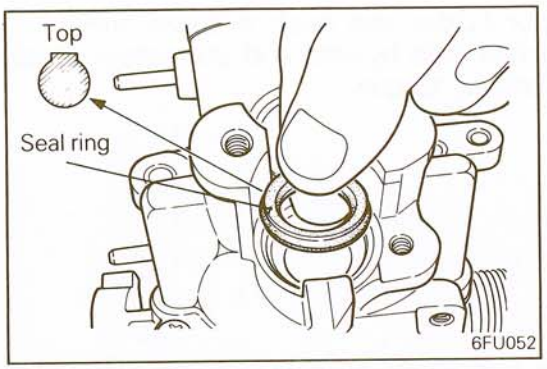

16. INSTALLATION OF SEAL RING

Install a new seal ring in the mixing body. When fitting the seal ring, make sure that its flat side faces up.

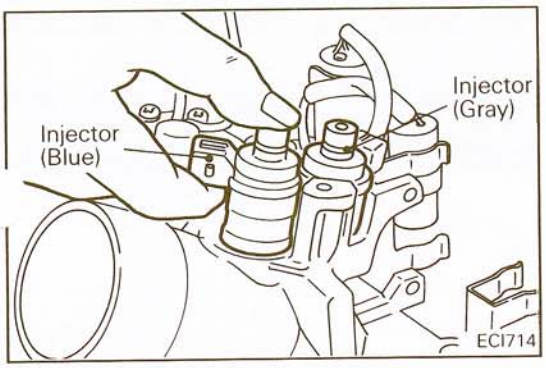

13. 12. INSTALLATION OF INJECTORS

(1) Fit a new O-ring and collar to the injector.
(2) Set the injector on the mixing body at correct position and push down firmly with a finger until it is seated.

Identification of injectors

Connector color	Position	Orifice
Blue	Right	Large
Gray	Left	Small

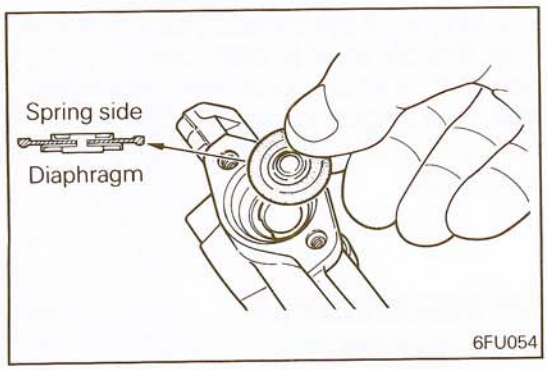

10. INSTALLATION OF DIAPHRAGM

Install the diaphragm in the injector holder in correct direction as shown.

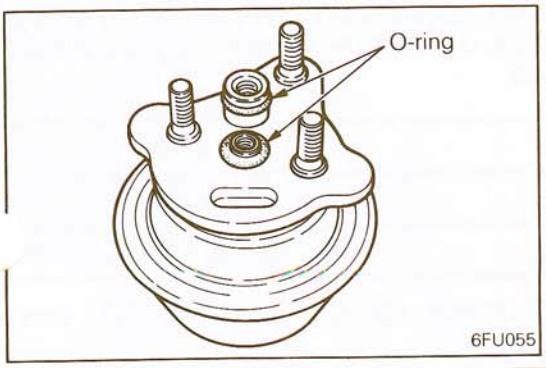

6. INSTALLATION OF FUEL PRESSURE REGULATOR

Fit a new O-ring to the regulator.

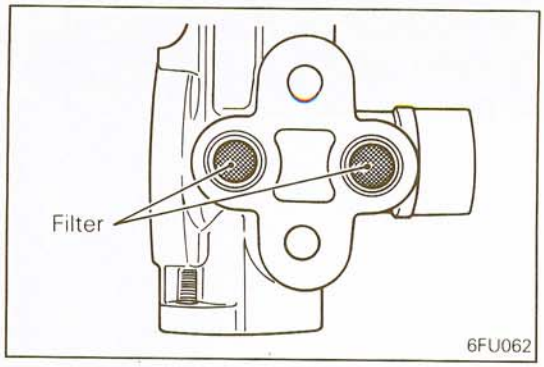

5. INSTALLATION OF INJECTOR HOLDER / 4. SCREW

(1) Check the injector holder filter for clogging and damage. Replace if necessary.

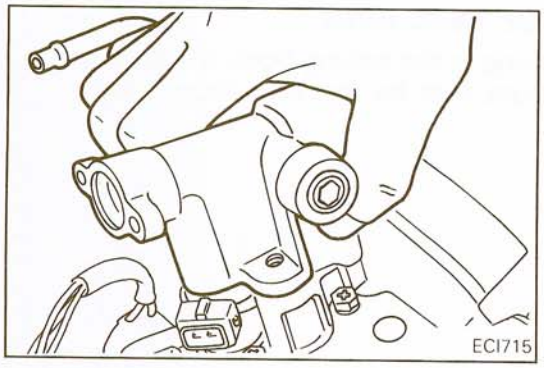

(2) Set the injector holder and push it down firmly.
(3) Tighten the screw little by little and alternately. Finally tighten to specified torque.

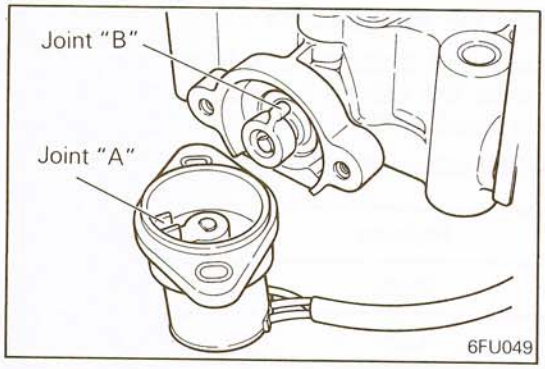

1. INSTALLATION OF THROTTLE POSITION SENSOR (TPS)

(1) Fit the joint "A" of throttle position sensor on the joint "B" of throttle body and combine the throttle position sensor to the throttle body by temporarily tightening the screw.

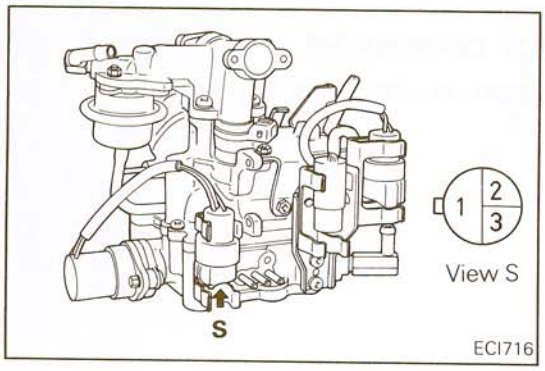

(2) Check correct installation of the throttle position sensor. While moving the throttle lever in both open and close directions, check that resistance between terminals 1 and 2 or 2 and 3 changes smoothly. If resistance changes smoothly, the throttle position sensor has been installed correctly.

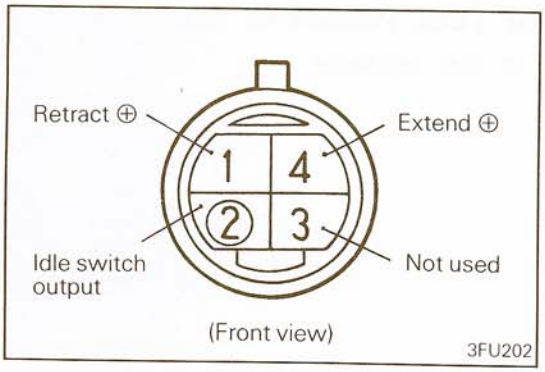

INSPECTION AFTER REASSEMBLY

N14NJDA

CONTINUITY CHECK OF IDLE SWITCH

(1) Using a circuit tester, check continuity between the body and terminal 2 when the throttle valve is fully closed and when fully opened.

Throttle valve	Continuity
Fully closed	Conductive
Fully opened	Non-conductive

(2) If otherwise than shown above, replace the ISC servo assembly.

STB Revision

FUEL PUMP

N14HA--

REMOVAL AND INSTALLATION

Pre-removal Operation
- Release of Residual Pressure from Fuel High Pressure Hose (Refer to P.14-39.)
- Draining Fuel
- Removal of Fuel Tank

Post-installation Operation
- Installation of Fuel Tank
- Replenishment of Fuel

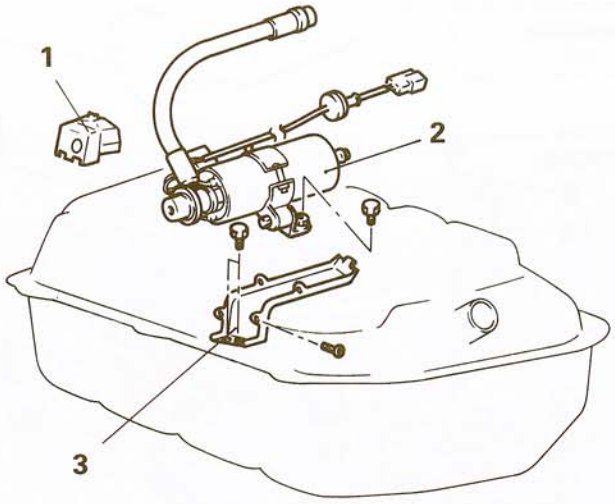

03Y754

Removal steps

1. Fuel pump protector
2. Fuel pump
3. Fuel pump support

NOTE
Reverse the removal procedures to reinstall.

FUEL TANK

N14GA--

REMOVAL AND INSTALLATION

Pre-removal Operation
- Release of Residual Pressure from Fuel High Pressure Hose (Refer to P.14-39.)
- Draining Fuel

Post-installation Operation
- Replenishment of Fuel

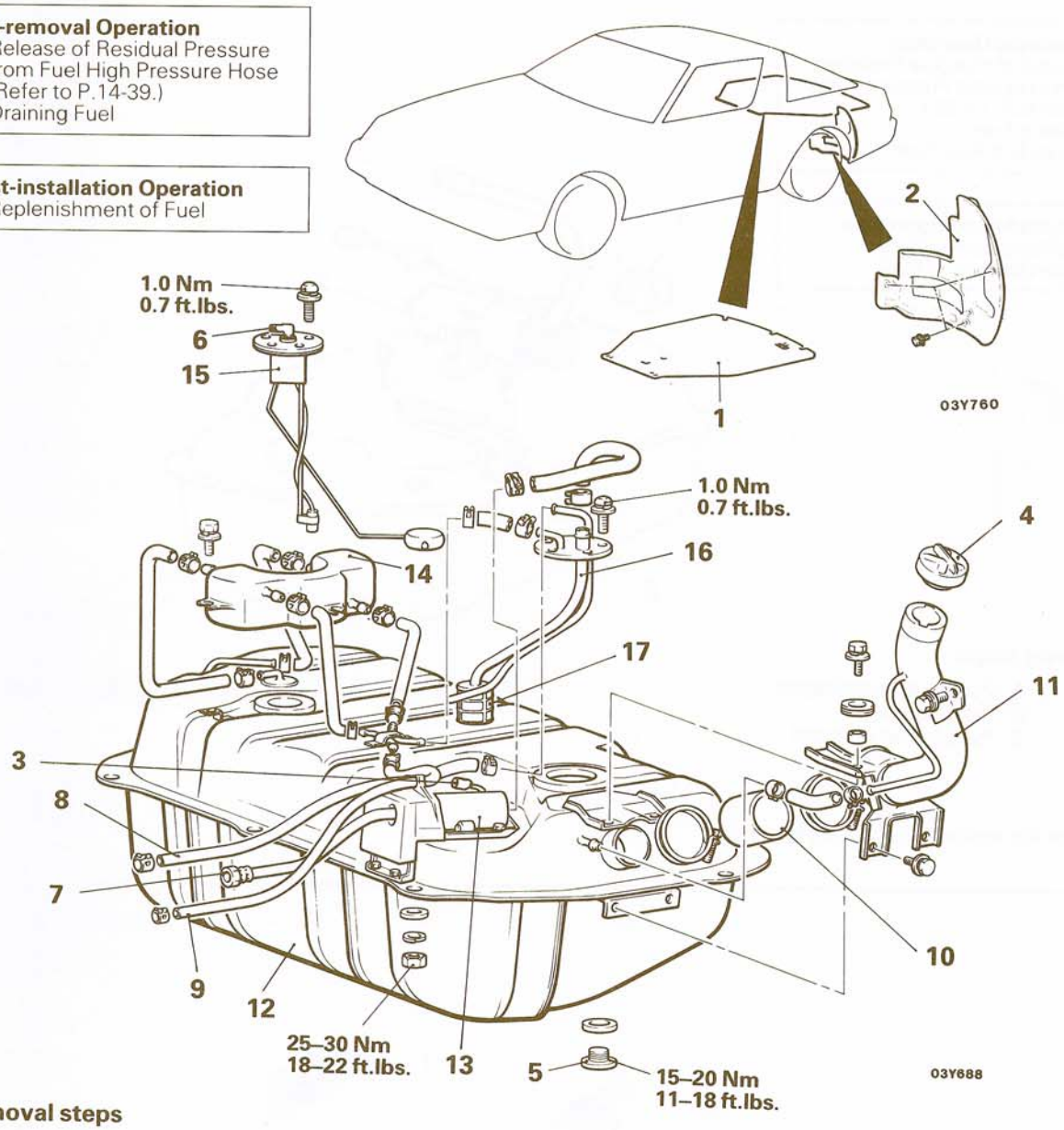

Removal steps

1. High floor side panel
2. Fuel pipe cover
3. Fuel pump connector connection
4. Fuel tank cap
5. Drain plug
6. Fuel gauge unit connector connection
- ◆◆ 7. Fuel high pressure hose connection
- ◆◆ 8. Return hose
- ◆◆ 9. Vapor hose
10. Fuel filler hose
11. Fuel filler neck
12. Fuel tank
13. Electrical fuel pump
14. Separator tank
15. Fuel gauge unit
16. Pipe assembly
17. In-tank fuel filter

NOTE
(1) Reverse the removal procedures to reinstall.
(2) ◆◆: Refer to "Service Points of Installation".

STB Revision

INSPECTION

N14GCAD

- Check the hoses and pipes for cracks, bends, deformation, wear or clogging.
- Check the fuel tank cap for operation.
- Check the fuel tank for deformation, corrosion or cracks.
- Check the fuel tank for entry of dust or foreign material.

  NOTE
  If the inside of the fuel tank is to be cleaned, use any one of the following:
  (1) Kerosene
  (2) Trichloroethylene
  (3) A neutral emulsion type detergent
- Check the in-tank fuel filter for damage or clogging.

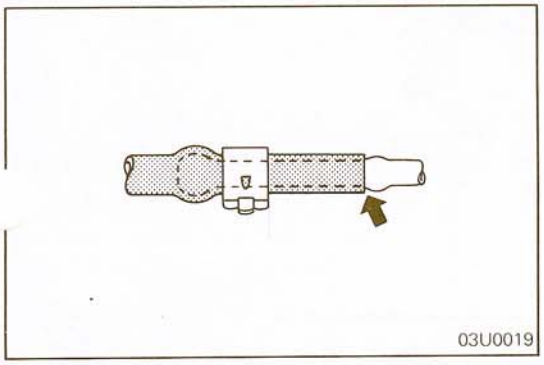

SERVICE POINTS OF INSTALLATION

N14GDAF

9. INSTALLATION OF VAPOR HOSE / 8. RETURN HOSE

When attaching the hoses to the pipes, be sure that the hose is attached until its end comes in touch with the bulge of the pipe as shown in the illustration.

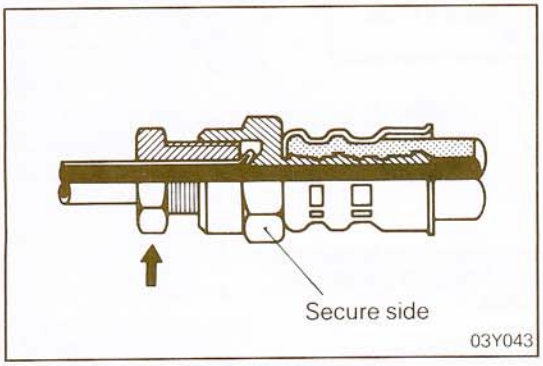

7. INSTALLATION OF FUEL HIGH PRESSURE HOSE

When connecting the fuel high pressure hose to pump, tighten the flare nut by hand, and then tighten it to 32 – 42 Nm (23 – 30 ft.lbs.) being careful that the fuel hose does not become twisted.

FUEL LINE AND VAPOR LINE

N14KA- -

REMOVAL AND INSTALLATION

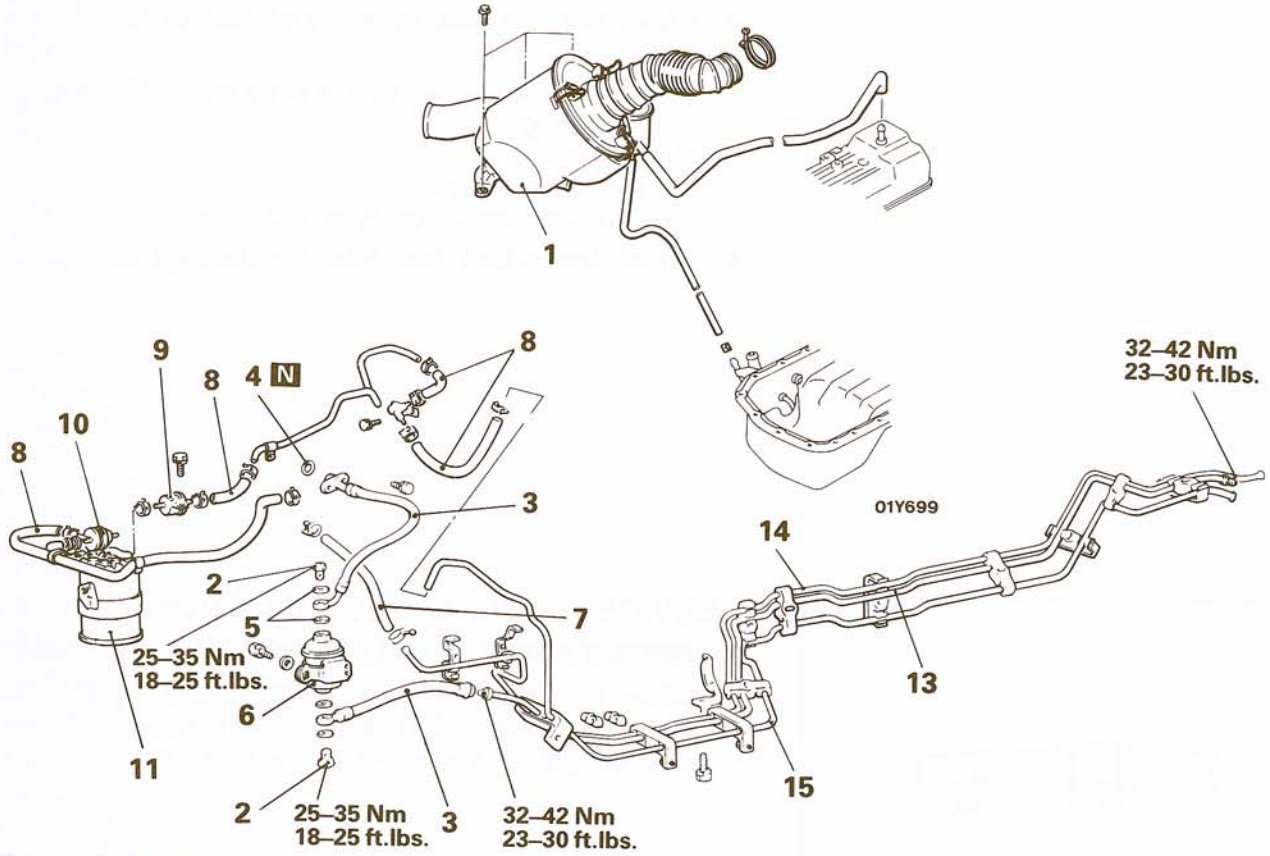

Removal steps

1. Air cleaner
2. Eye bolt
3. ◆◆ Fuel high pressure hose
4. O-ring
5. Gasket
6. Fuel filter
7. ◆◆ Return hose
8. ◆◆ Vapor hose
9. Overfill limiter (two-way valve)
10. Purge control valve
11. Fuel check valve
12. Canister
13. Main pipe
14. Return pipe
15. Vapor pipe

Pre-removal Operation
- Release of Residual Pressure from Fuel High Pressure Hose (Refer to P.14-39.)

NOTE
(1) Reverse the removal procedures to reinstall.
(2) ◆◆: Refer to "Service Points of Installation".
(3) N: Non-reusable parts

03Y700

INSPECTION

N14KCAC

- Check the hoses and pipes for cracks, bends, deformation, wear or clogging.
- Check the fuel filter for clogging or damage.
- Check the canister for clogging.
- Check the fuel check valve for malfunction.

STB Revision

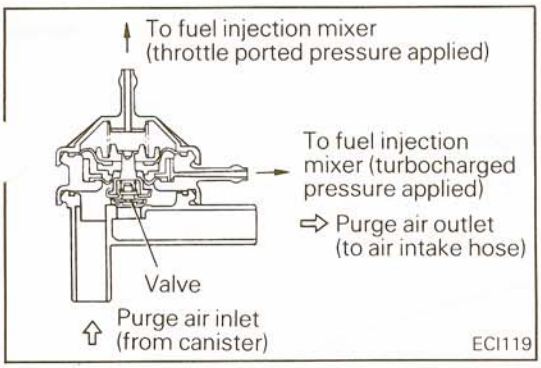

INSPECTION OF PURGE CONTROL VALVE

(1) Make sure that the engine coolant is at a temperature between 80 and 90°C (180 and 190°F).
(2) Disconnect the purge control hose from the air cleaner and blow into the purge hose. If the valve is not open, its operation is normal. Then start the engine and increase the engine speed to 1,500 to 2,000 rpm and blow into the purge hose. If the valve is not open, check for clogged or broken vacuum hose, or malfunctioning thermo valve.

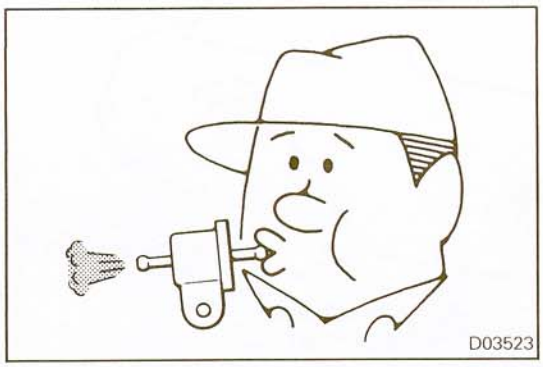

INSPECTION OF OVERFILL LIMITER (TWO-WAY VALVE)

A simple way of inspection, however, may be adopted in which the overfill limiter is removed and then air is lightly blown into either the inlet or outlet by mouth. If the air passes after a slight resistance, overfill limiter is in good condition.

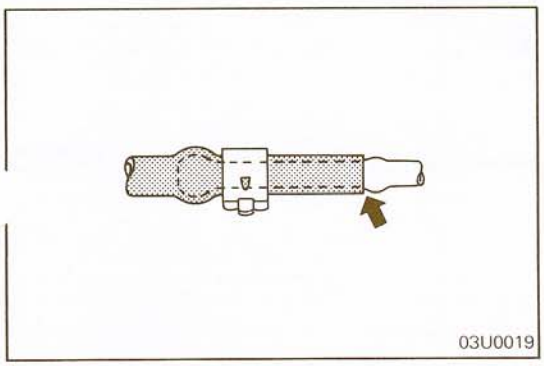

SERVICE POINTS OF INSTALLATION N14KDAA

8. INSTALLATION OF VAPOR HOSE / 7. RETURN HOSE

When attaching the hoses to the pipes, be sure that the hose is attached until its end comes in touch with the bulge of the pipe as shown in the illustration.

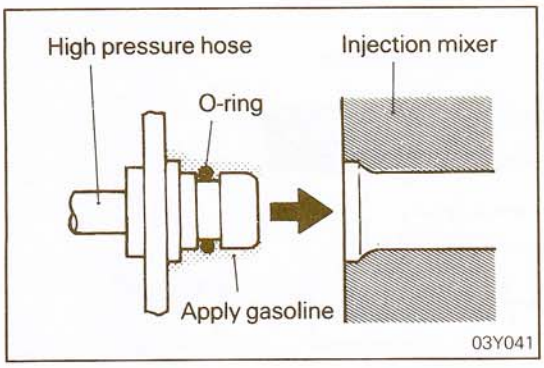

3. INSTALLATION OF FUEL HIGH PRESSURE HOSES

(1) When connecting the fuel high pressure hose to the injection mixer, apply gasoline to the hose union. Then insert the hose, being careful not to damage the O-ring, and tighten securely.

Caution
Because there is high pressure applied between the fuel pump and the injection mixer, be especially sure that there is no fuel leakage in this area.

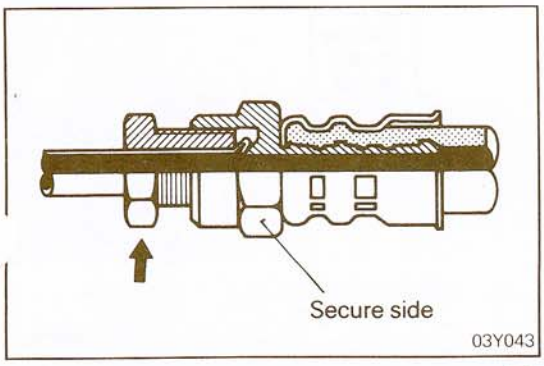

(2) When connecting the fuel high pressure hose to pipe, tighten the flare nut by hand, and then tighten it to 32 – 42 Nm (23 – 30 ft.lbs.), being careful that the fuel hose does not become twisted.

OUTLINE

N14TAAC

AUTOMATIC SPEED CONTROL CONFIGURATION

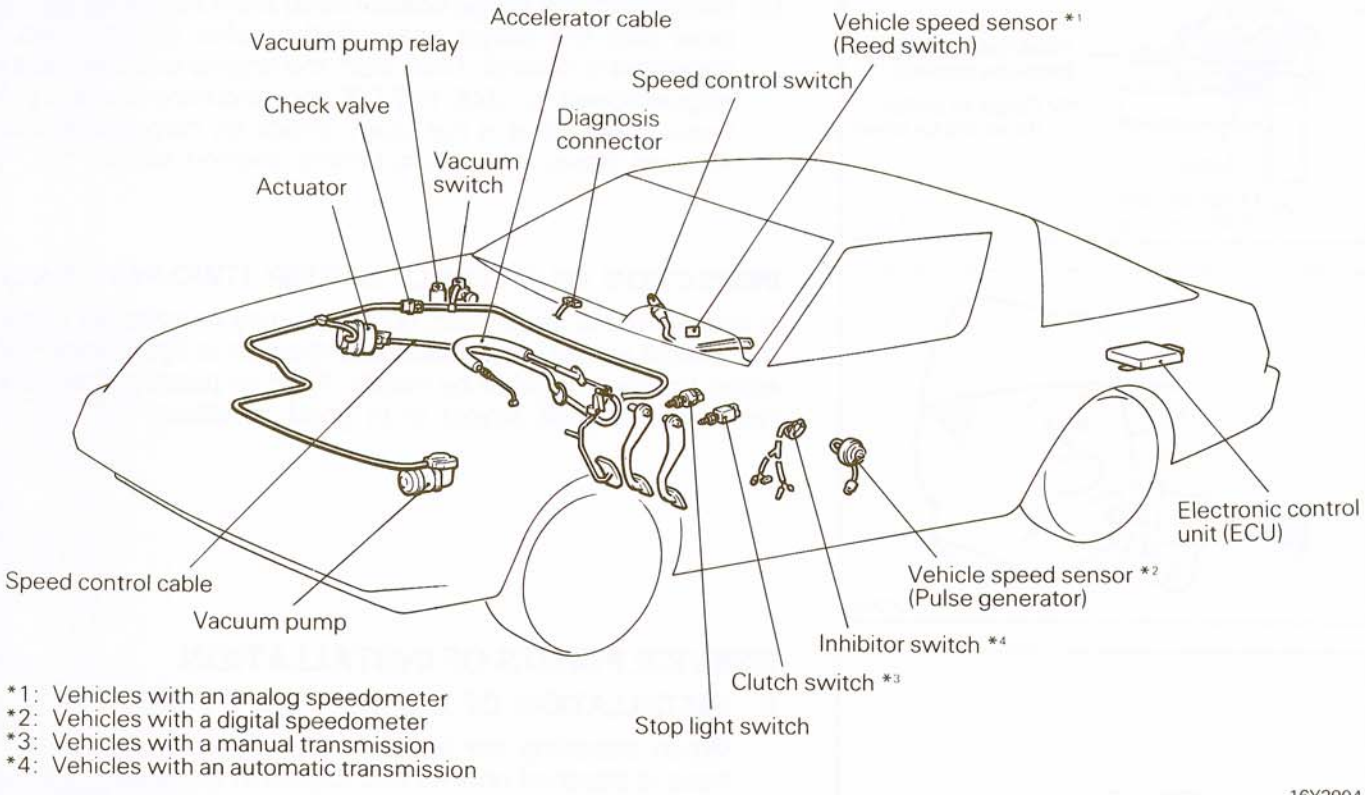

16Y2904

System Block Diagram

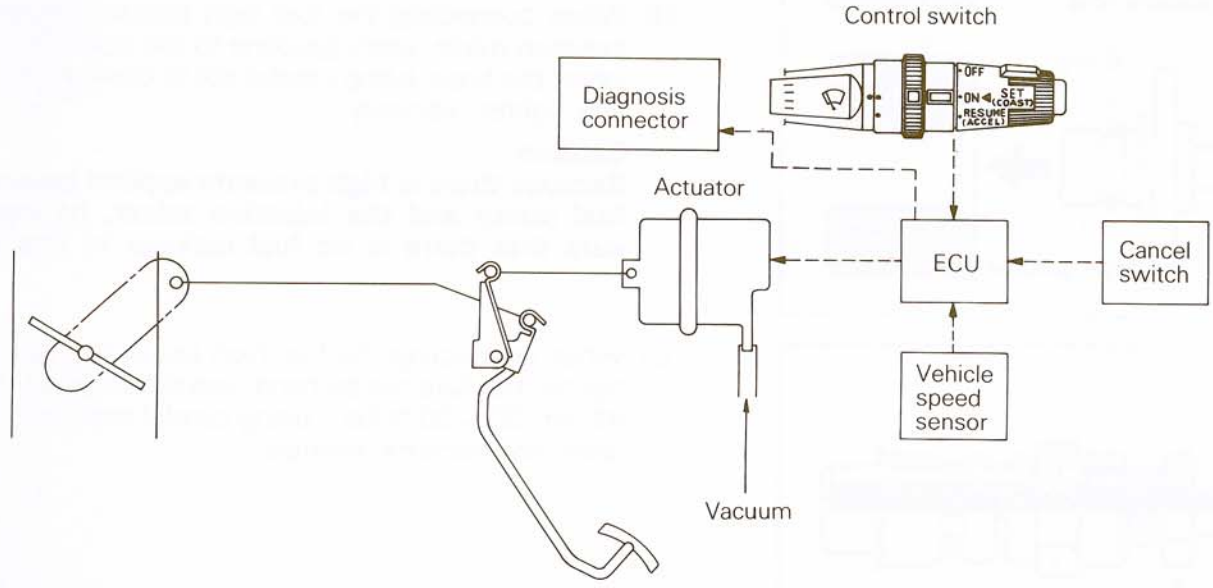

16Y2922

STB Revision

Components and functions

Component		Function
Electronic control unit (ECU)		Receives signals from sensors and controls all functions of ASC by computer
Control switch	MAIN switch	Turns on/off ASC power
	SET switch	Controls ASC functions by SET (Coarse) and RESUME (Accel)
	RESUME switch	
	MAIN switch indicator	Lights when MAIN switch is on (Incorporated in column lever)
Actuator		Adjusts the throttle valve opening according to ECU signal
Vacuum system	Vacuum pump	Generates vacuum to make up vacuum (intake manifold pressure) when it is insufficient to drive the actuator
	Vacuum switch	Detects drop of intake manifold vacuum
Vehicle speed sensor		Generates pulse signal corresponding to vehicle speed
Cancel switch	Stop light switch	Outputs ASC cancel signal
	Clutch switch (vehicles with a manual transmission)	
	Inhibitor switch (vehicles with an automatic transmission)	
Diagnosis connector		By connecting a voltmeter, allows ECU diagnosis and input check codes to be read

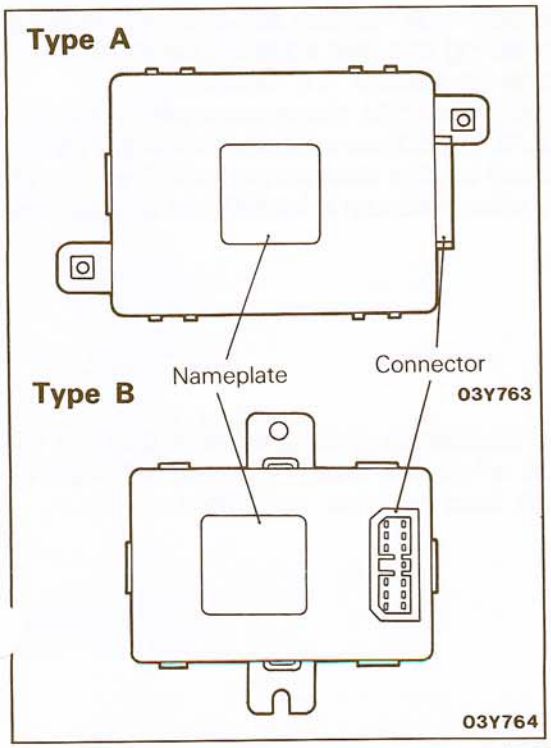

NOTE
Some earlier production cars of 1987 model STARION are equipped with an ECU having no self-diagnosis and input check functions (Type B) although the ECUs on all later produced 1987 model cars are provided with these functions and also a diagnosis connector (Type A).
The Type A and Type B ECUs can be identified by their nameplate colors as follows:

Nameplate color
Type A: Green
Type B: Blue

All the information in this section deals with only the Type A ECU. For the information on the Type B ECU, it is requested to refer to "Speed Control System" section in GROUP 8 of 1986 STARION Service Manual.

CONSTRUCTION AND OPERATION

N14TBAC

ACTUATOR

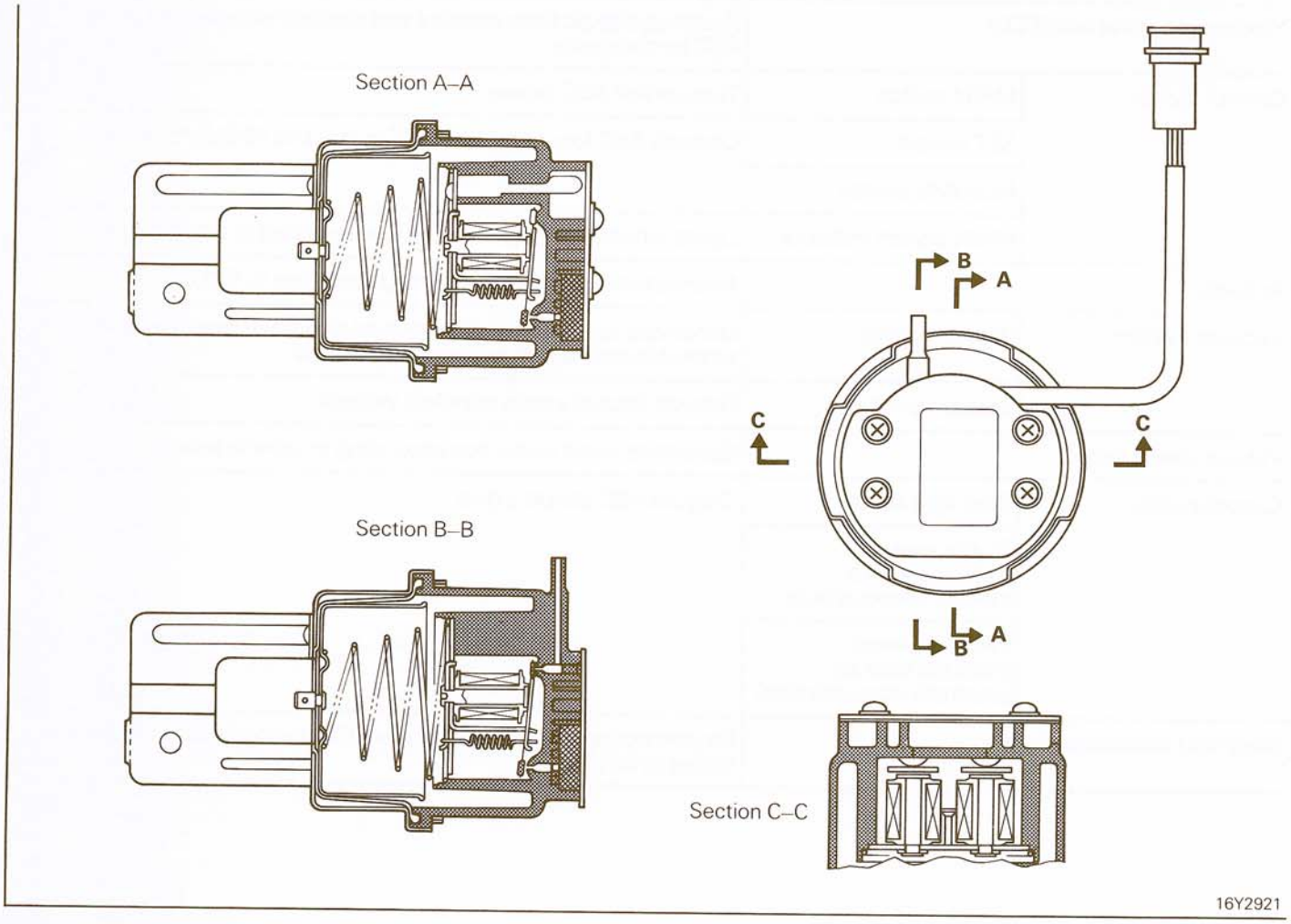

16Y2921

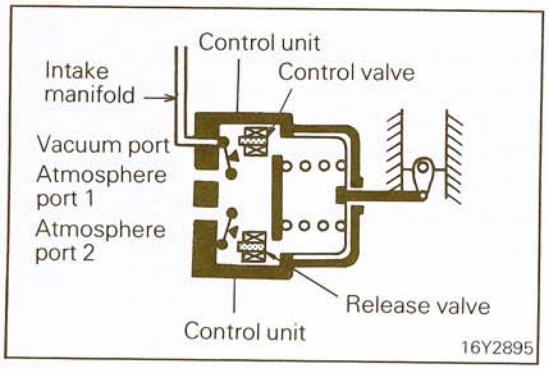

16Y2895

The actuator is a diaphragm type vacuum servo which consists of a diaphragm, return spring and two solenoid valves (control valve and release valve) to control the vacuum.
In absence of signals from the ECU, the vacuum port is closed and the atmosphere ports 1 and 2 are open as illustrated. When the control valve is turned on, the atmosphere port 1 is closed and the vacuum port is open, vacuum is introduced to open the throttle valve.

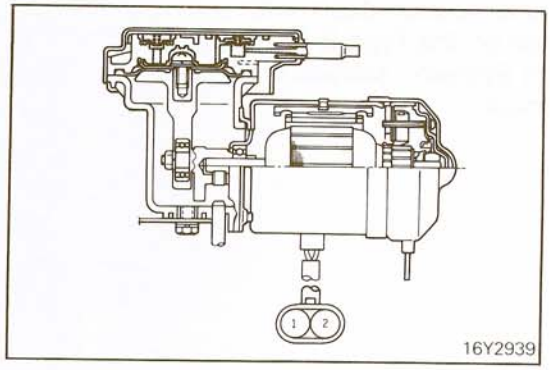

16Y2939

VACUUM PUMP

This pump which is a diaphragm type generates vacuum to secure control function when the intake manifold vacuum is insufficient due to high load or other conditions.

STB Revision

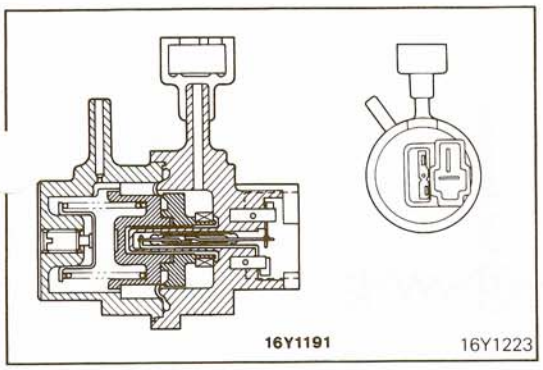

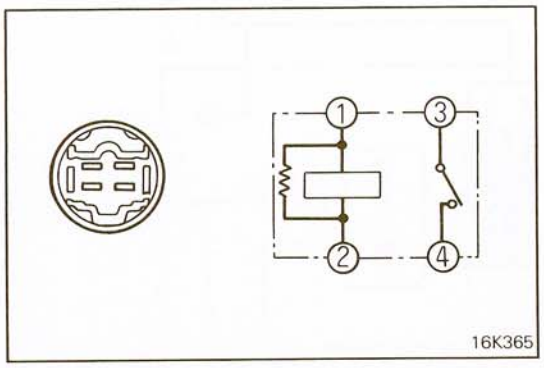

VACUUM SWITCH

This switch detects the pressure in the intake manifold and operates according to that pressure as shown below, transmitting the signal to operate the vacuum pump to the vacuum pump relay.

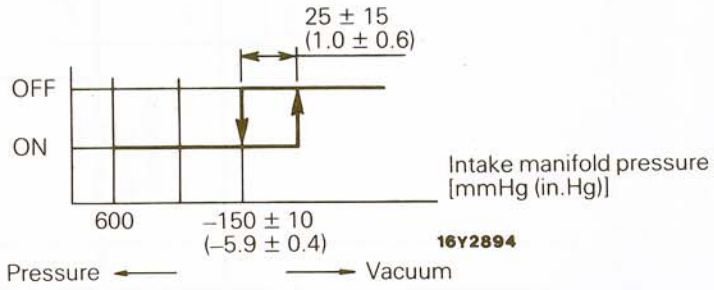

VACUUM PUMP RELAY

This relay operates the vacuum pump when the vacuum switch is turned on.

VACUUM PIPINGS

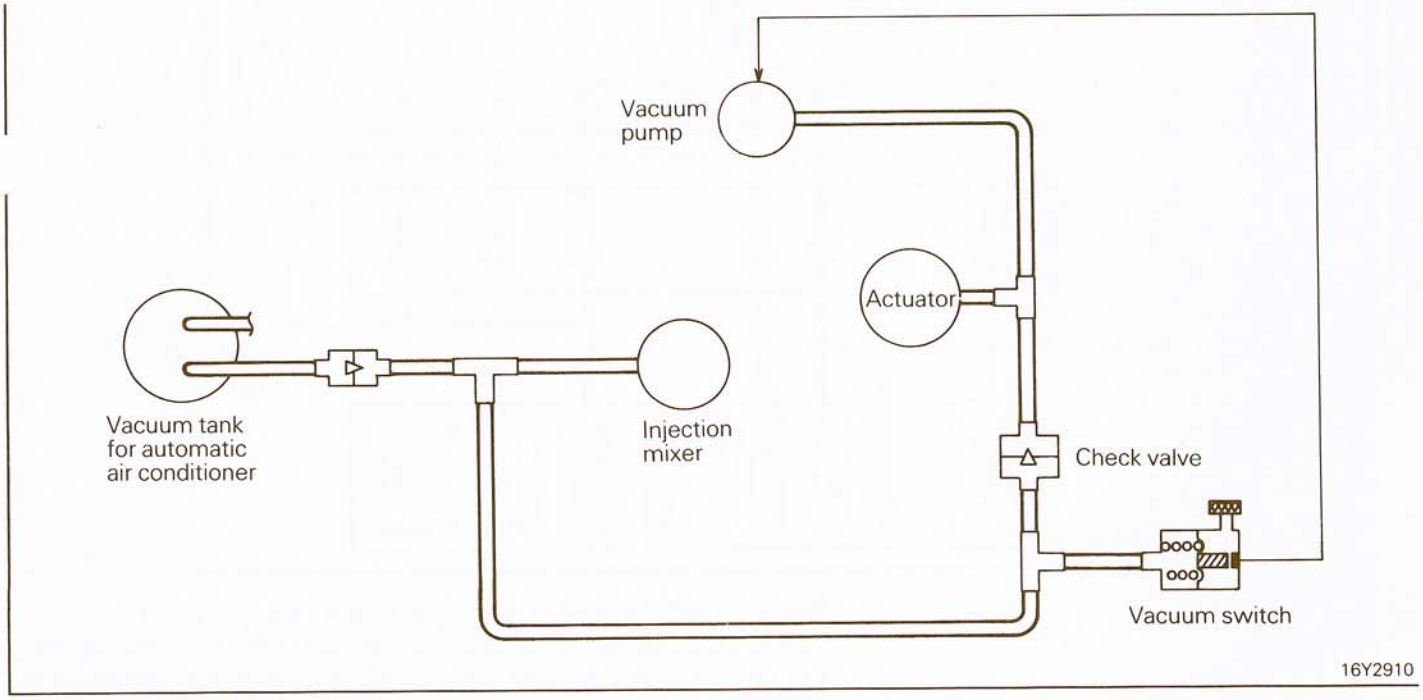

The actuator is driven by the vacuum of the injection mixer. In case the vacuum drops to such level as to actuate the vacuum switch, however, the vacuum pump is started and the vacuum generated by the pump is used to drive the actuator. The check valve serves to prevent flow from the injection mixer side when the vacuum pump is in operation and to prevent application of positive pressure due to turbocharging.

ELECTRONIC CONTROL UNIT (ECU) BLOCK DIAGRAM

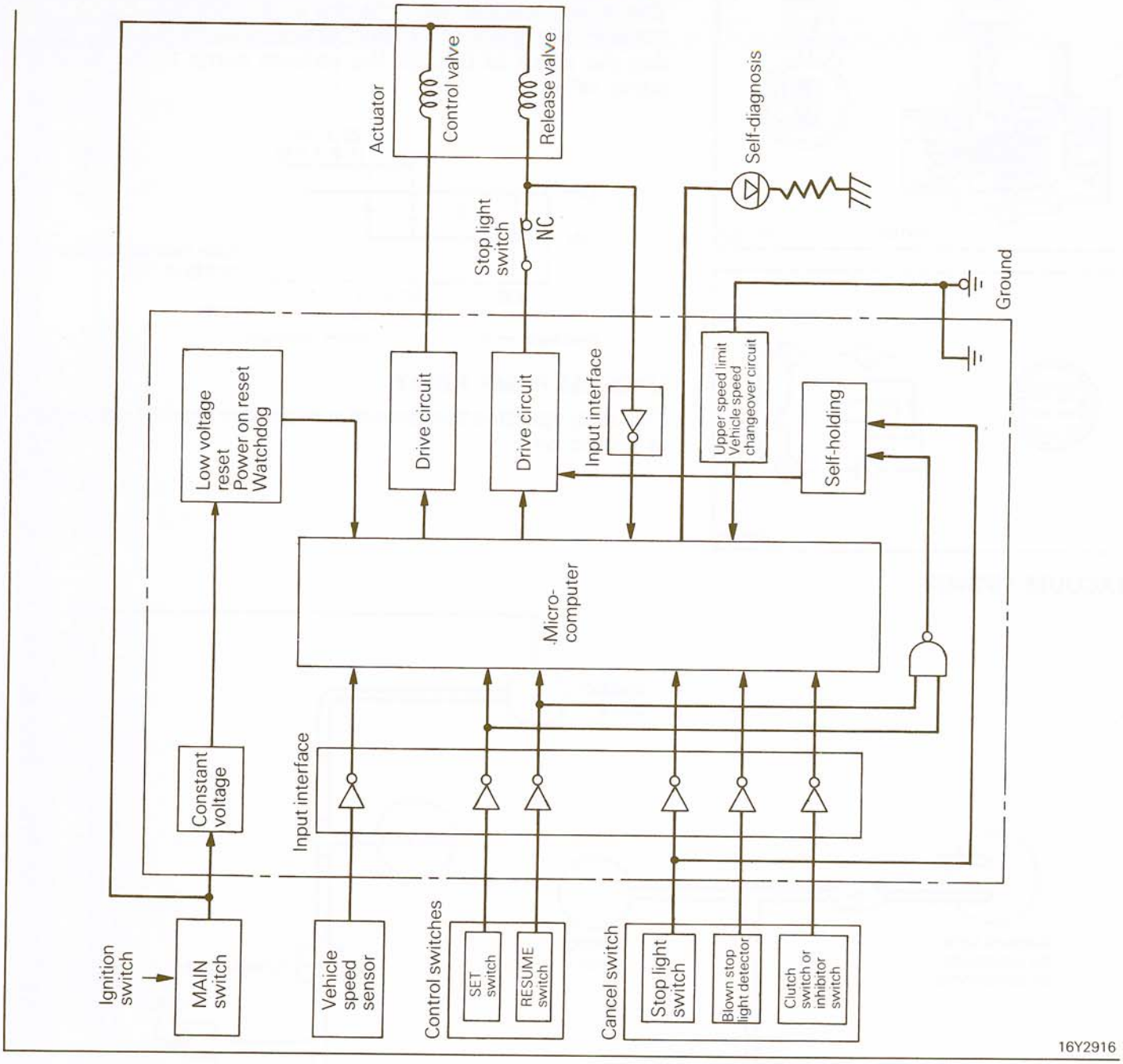

The ECU with a built-in microcomputer has the current vehicle speed set, deceleration set, acceleration set, resume, cancel, low speed limit and high speed limit functions and the fail-safe function.

The microcomputer outputs the control signals to the two solenoid valves (release and control) of the actuator according to the signals from the vehicle speed sensor and the switches. The ASC operates only when the MAIN switch is on.

(1) Current vehicle speed set function
When the SET switch is pressed while driving within the vehicle speed setting range of 40 ± 3 to 200 ± 5 km/h (25 ± 2 to 124 ± 3 mph), the vehicle speed when the switch is turned from on to off is stored as the set vehicle speed and thereafter the actuator is so controlled as to keep that speed. The timing chart is shown below.

STB Revision

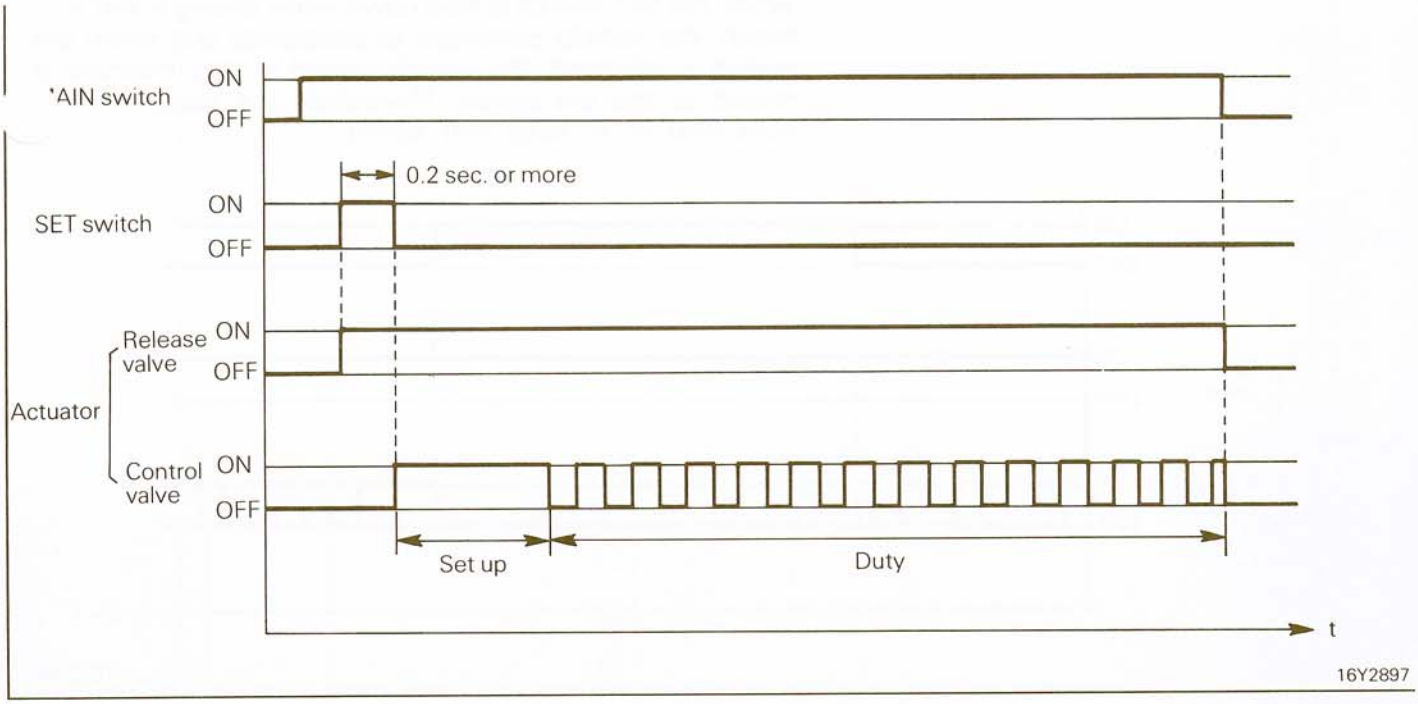

- Set up
  In order to quickly control the throttle to specified opening and to minimize vehicle speed variations after the ASC has been set, a signal is output whose pulse width is set based on the relationship between the vehicle speed on a level road and with the actuator operation delay and cable play amount taken into account.
- Duty
  After set up, the vehicle speed is measured successively by the vehicle speed sensor and the set speed and the actual speed are compared. Based on this comparison, the energization time (duty) of the control valve and consequently the throttle opening are controlled. When the actual speed is higher than the set speed, the control valve energization time is decreased for smaller throttle valve opening. On the other hand, when the actual vehicle speed becomes smaller than the set speed, the control valve energization time is increased for larger throttle valve opening.

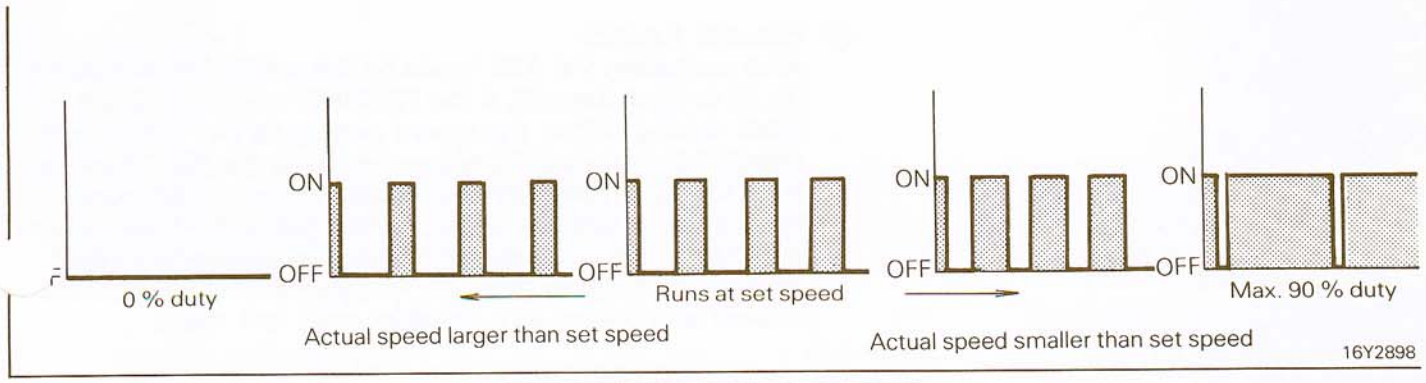

(2) Deceleration set function
When the SET switch is held down while driving in the ACS mode, the vehicle continues to decelerate and when the switch is released, the vehicle speed at that moment is stored as the set speed. Thereafter, the actuator is controlled as to keep that speed.

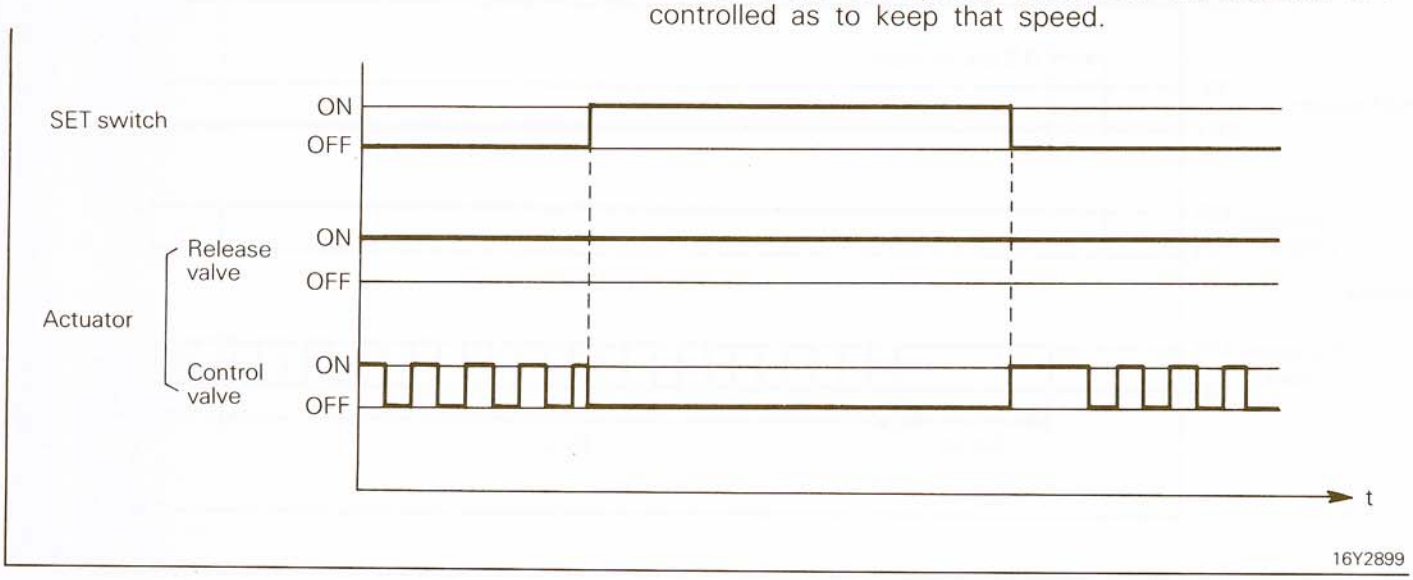

(3) Acceleration set function
When the RESUME switch is held down (ON) while driving in the ACS mode, the vehicle continues to accelerate and when the switch is released (OFF), the vehicle speed at that moment is stored as the set speed. Thereafter, the actuator is so controlled as to keep that speed.

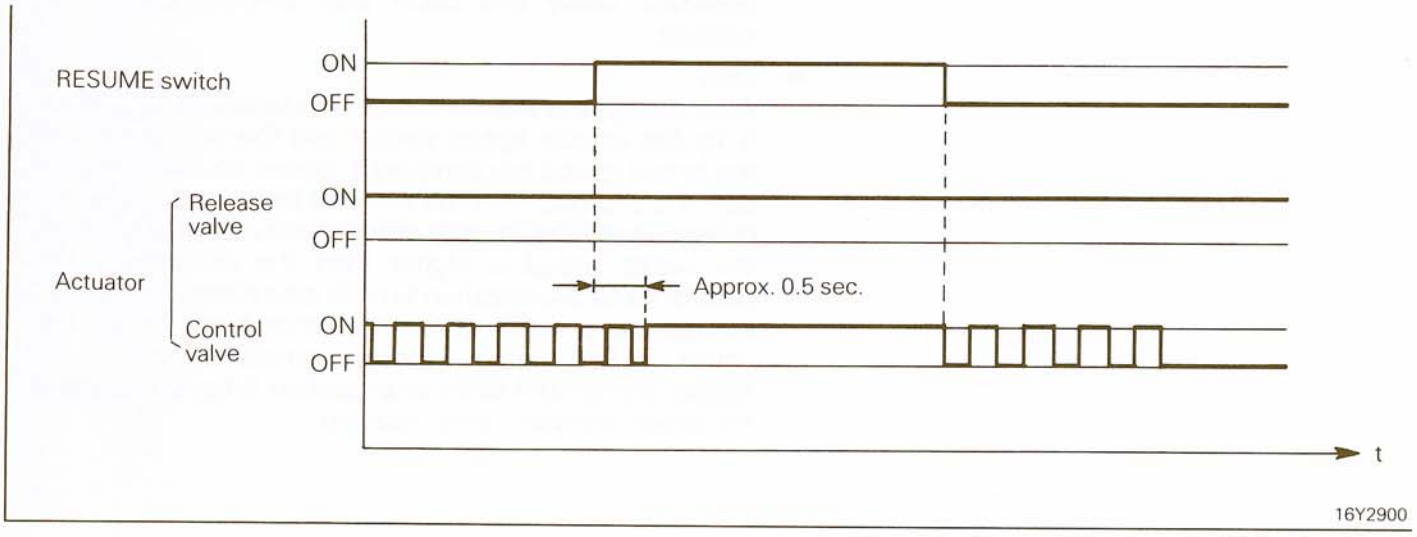

(4) Resume function
After cancelling the ASC mode by the method described in ①, ② or ③ of item (5), if the RESUME switch is turned on while driving within the speed setting range, the vehicle speed that was stored before cancelling the ASC mode is resumed and thereafter the vehicle is run at that speed. In case the speed has once dropped below the lower limit speed [item (6)] or cancelling has been made by the method given in ④ or ⑤ of item (5), the stored vehicle speed is cleared and hence this function does not work.

STB Revision

(5) Cancel function
When any of the following signals is input while the vehicle is running in the ASC mode, signals to the two solenoid valves of the actuator are cut off to cancel the ASC mode.

① Stop light switch ON (the brake pedal depressed)
② Clutch switch ON (the clutch pedal depressed) ..... Vehicles with a manual transmission
③ Inhibitor switch ON (the selector lever set to N position) ..... Vehicles with an automatic transmission
④ MAIN switch OFF
⑤ Ignition switch OFF

In case the ASC mode has been cancelled by the signal ①, ② or ③, the set vehicle speed is kept stored.

(6) Low speed limit function
When the vehicle speed drops to the low limit speed of 40 ± 3 km/h (25 ± 2 mph) or lower, the ASC mode is cancelled automatically.

(7) High speed limit function
In case the acceleration operation described in item (3) is made while running at a speed lower than the high speed limit of 200 ± 5 km/h (124 ± 3 mph), the vehicle is accelerated to the high speed limit and thereafter runs in the ASC mode at that speed.
In case the current vehicle speed setting [item (1)] is made while running at a speed higher than the high speed limit, the high limit speed is stored as the set speed and control is made to keep that speed.

(8) Auto cancel function (including fail-safe function)
When any of the following signals is input while the vehicle is running in the ASC mode, signals to the two solenoid valves of the actuator are cut off to cancel the ASC mode.

① When the vehicle speed drops to the low speed limit or lower.
② When the vehicle speed drops to a speed about 20 km/h (12 mph) lower than the set speed.
③ When the vehicle speed once recovers to the set speed less about 10 km/h (6 mph) and then drops again more than 20 km/h (12 mph) during the RESUME mode.
④ When depression of the brake pedal causes the stop light switch to turn on in case the stop light fuse has been blown.
⑤ When the stop light switch has an open circuit.
⑥ When the vehicle speed signal has not been input for a fixed time.
⑦ When the SET switch and the RESUME switch are turned on simultaneously.
⑧ When the SET switch or the RESUME switch is turned on simultaneously with the CANCEL switch.
⑨ When the control/release valve drive output transistor has a short circuit.

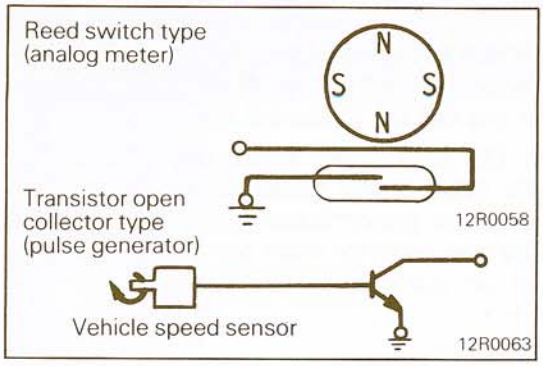

VEHICLE SPEED SENSOR

The vehicle speed sensor sends to the ECU a pulse signal proportional to the rotating speed (vehicle speed) of the output gear of the transmission. It is mounted in the speedometer in the case of an analog type speedometer or at the speedomete cable lead out of the transmission in the case of a digital type speedometer.

The former is called the reed switch type and the latter is called the transistor open collector type. Both type generate four pulse signals at every rotation of the output gear. The sensor of both types is shared in common by other electronic control systems and in the event of failure of the sensor itself, some troubles will occur in all systems using it so that the failure of the sensor can be known easily. The vehicle speed sensor input terminal of the ECU is pulled up to about 12 V power via a diode and resistor as illustrated.

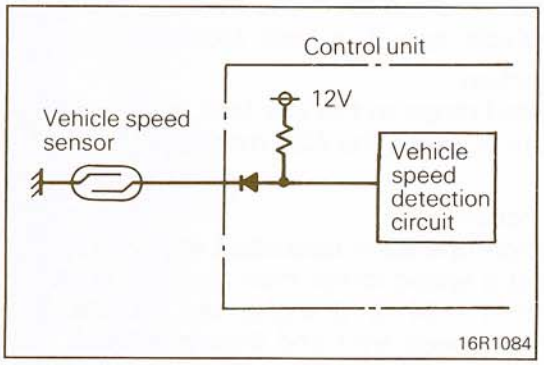

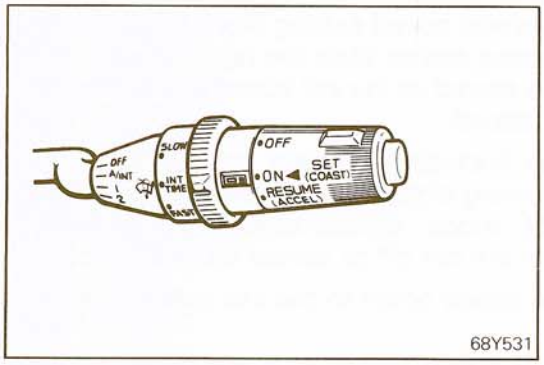

ASC CONTROL SWITCH

The MAIN switch to turn on/off the ASC control unit power and the ASC command input switches (SET switch and RESUME switch) are mounted on the column switch lever to the right of the driver.

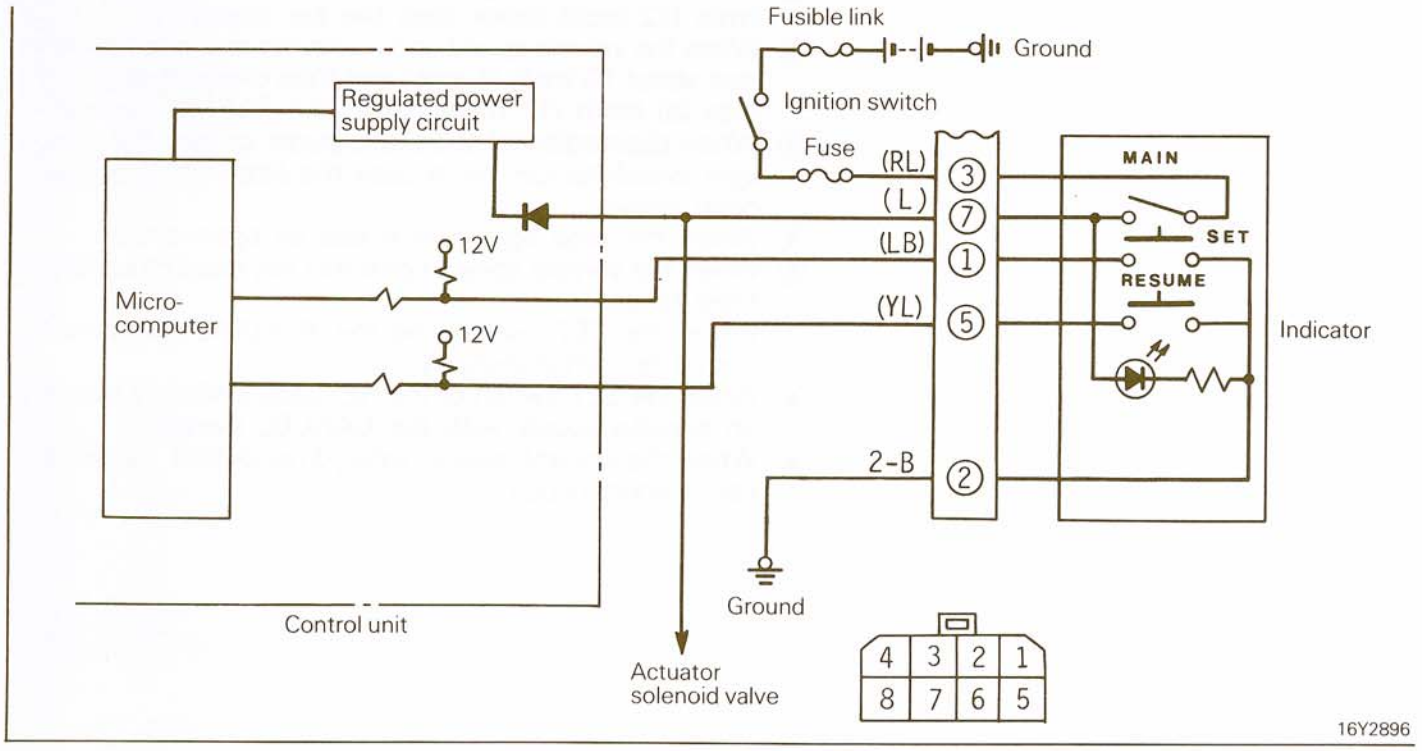

STB Revision

(1) MAIN switch
This switch turns on/off the power. When the switch is turned on while the ignition switch is in the ON position, power is supplied to the ECU and the indicator in the switch lights up. At the same time, power is also supplied to the solenoid valves of the actuator, to enable ASC operation.

(2) ASC command input switches (SET and RESUME switches)
The SET switch and the RESUME switch are both used to input the ASC control signals. Both are auto reset, normal open type switches.
The ECU input interface is pulled up by the battery voltage and the terminal voltage goes low (0 V) when the switch is on and goes high (approx. 12 V) when it is off.

CANCEL SWITCHES

The cancel switches include the stop light switch, the clutch switch (vehicles with a manual transmission) and inhibitor switch (vehicles with an automatic transmission) and the ASC is cancelled when any of these is operated.

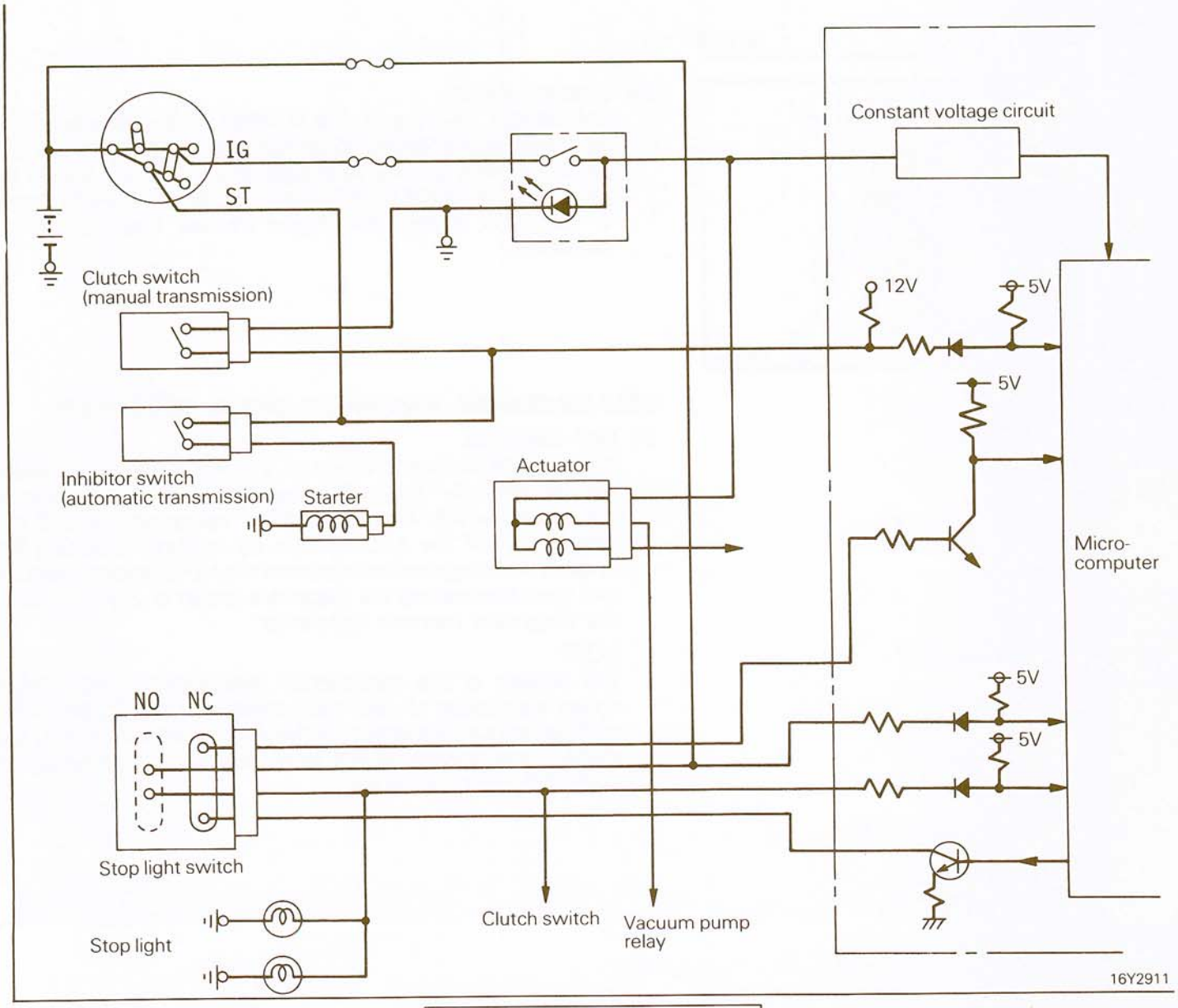

STB Revision

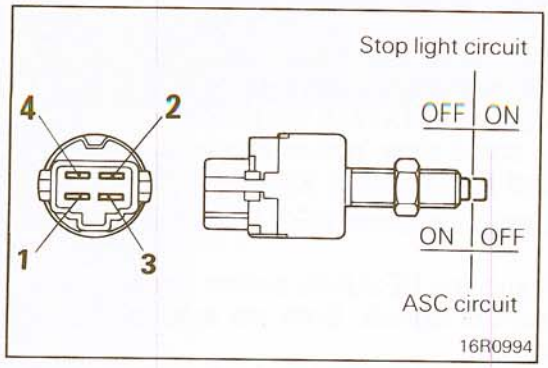

(1) Stop light switch
The switch is highly reliable with the stop light contact and the ASC contact provided separately. When the brake pedal is depressed, the ASC cancel contact of the stop light switch opens to cut the signal to the actuator release val thus cancelling the ASC. For auto cancel (fail-safe) functio., the power side and load side signals of the stop light switch are also input to the control unit.

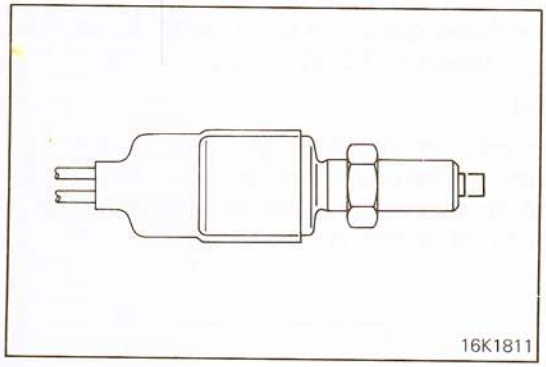

(2) Clutch switch
The contact of this switch closes when the clutch pedal is depressed. When the clutch pedal is depressed during driving in the ASC mode, the mode is cancelled.

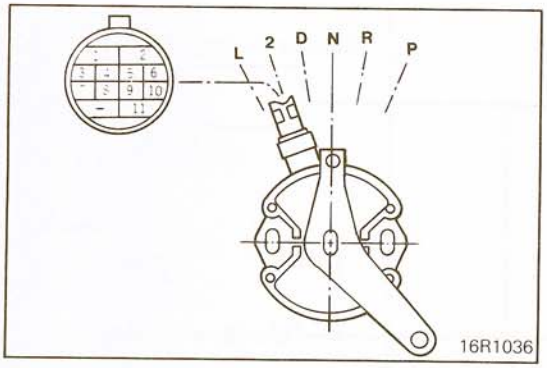

(3) Inhibitor switch
The starter circuit and the inhibitor switch (provided for automatic transmission control) signals are input to the ECU as in the case of the stop light switch circuit. When the selector lever is set to the neutral (N) position while driving in the ASC mode, this signal causes the ASC to b cancelled.

SELF-DIAGNOSIS AND INPUT CHECK FUNCTIONS

(1) Self diagnosis
When there is a cancelation of the ASC system operation not intentionally made by the driver, it is possible to determine which circuit or what operation caused the cancelation of the ASC system by (without stopping the engine) stopping the vehicle (with the MAIN switch still ON) and then connecting the diagnosis tester or a voltmeter to the diagnosis harness connector.

NOTE
The display of the malfunction data starts if the vehicle speed decreases to less than approximately 20 km/h (12 mph) after the cancelation of the ASC system function, and stops if the vehicle speed increases to approximately 20 km/h (12 mph) or higher.

Self-diagnosis descriptions and displays

Code No.	Diagnosis item	Display patterns	Self-diagnosis description
–	–	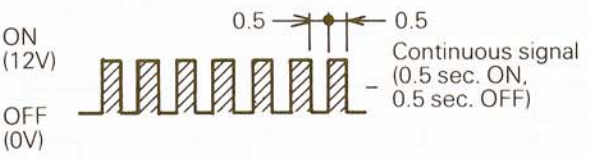	[Display pattern (when ECU normal) when vehicle speed is approximately 20 km/h (12 mph) or higher, and before fixed-speed driving has been set.]
11	Actuator drive circuit	(Example) Code No. 13 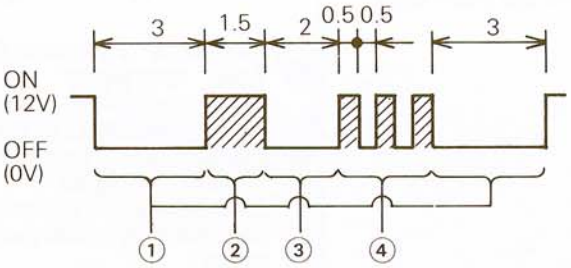 ① Pause time: 3 seconds OFF ② "Tens" rank signal: 1.5 second ON (called "10") ③ Rank division: 2 seconds OFF ④ "Units" rank signal: 0.5 second ON, 0.5 second OFF signal (The number of ON periods is the number of "unit" ranks.) 03R0195	The control valve or its driving transistor, the release valve or its driving transistor, or the brake switch is damaged (open).
12	Vehicle speed signal circuit malfunction		Vehicle speed signal is not input for one second or longer.
13	Low-speed limiter circuit		When the vehicle speed decreases to 40 km/h (25 mph) or lower.
14	Redundant brake		When actual vehicle speed decreases to approximately 20 km/h (12 mph) or more below the memorized vehicle speed.
15	Control switch malfunction		When the SET switch and the RESUME switch are switched ON at the same time.
16	When cancel signal is input		When the stop light switch, clutch switch or inhibitor switch is switched ON, or there is damaged or disconnected wiring of the stop light switch input wire.

(2) Input check function

When the ignition switch is ON, and with the SET switch and the RESUME switch ON (simultaneously pressed), the input check mode can be selected by switching ON the MAIN switch, thus permitting checking of the input circuits in the same way as for self-diagnosis.

NOTE

1. The input check mode can be canceled by switching the MAIN switch OFF.
2. The ASC system does not function during the input check mode.
3. All of the code numbers in the table below are sequentially displayed in order from the lowest number.

Input check mode

Code No.	Input signal condition	Display patterns
21	SET switch ON signal received.	(Example) Code No. 23 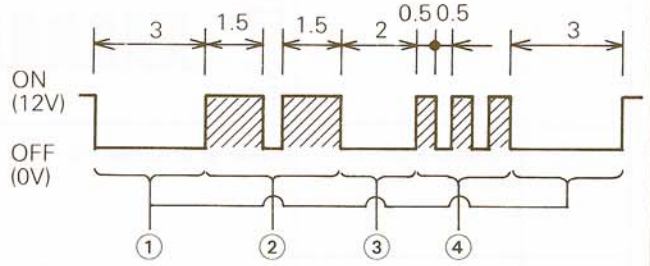 ① Pause time: 3 seconds OFF ② "Tens" rank signal: 1.5 second ON, 0.5 second OFF; then 1.5 second ON (called "20") ③ Rank division: 2 seconds OFF ④ "Units" rank signal: 0.5 second ON, 0.5 second OFF signal (The number of ON periods is the number of "unit" ranks.) 03R0197
22	RESUME switch ON signal received.	
23	Cancel switch ON signal received. (Stop light switch ON, clutch switch or inhibitor switch ON)	
24	Vehicle speed 40 km/h (25 mph) or higher signal received.	
25	Vehicle speed less than 40 km/h (25 mph) signal received.	

STB Revision

SPECIFICATIONS

N14CA-B

GENERAL SPECIFICATIONS

Items	Specifications
Speed control switch	
Rated load A	
ON	Max. 1
SET, RESUME	0.1 – 0.3
Voltage drop between terminals V	
ON	0.15 or less
SET, RESUME	0.1 or less
Stop light switch	
Rated load A	12.5
Voltage drop between terminals V	0.15 or less
Clutch switch	
Rated load A	15
Voltage drop between terminals V	0.15 or less
Speed control unit	
Speed control range km/h (mph)	40 (25) or more
Set error [At 80 km/h (50 mph)] km/h (mph)	±1 (±0.6)
Vehicle speed memory variation [80 km/h (50 mph), 30 minutes at normal temperature] km/h (mph)	±1 (±0.6)
Actuator	
Servo type	Diaphragm type
Diaphragm stroke mm (in.)	36 (1.4)
Effective diameter mm (in.)	70.5 (2.8)
Effective area cm^2 ($in.^2$)	39 (6.0)
Vacuum check valve	
Type	Ball seat type
Vacuum pump	
Type	Diaphragm type
Rated current A	1.6 or less
Generated vacuum mmHg/min. (in.Hg/min.)	150 (5.9) or more
Vacuum switch	
Cut-in vacuum mmHg (in.Hg)	140 – 160 (5.5 – 6.3)
Cut-out vacuum mmHg (in.Hg)	160 – 190 (6.3 – 7.5)
Vacuum pump relay	
Excitation coil rated current A	0.135 – 0.215
Maximum contact current capacity A	22
Voltage drop between terminals V	0.2 or less

SERVICE SPECIFICATIONS

N14CB-B

Items	Specifications
Speed control system	
Terminal resistance of solenoid valve in actuator	
Release valve Ω	Approx. 60
Control valve Ω	Approx. 30
Actuator stroke mm (in.)	36 (1.4)
Vacuum pump vacuum mmHg (in.Hg)	150 (5.9) or more
Control cable play mm (in.)	0 – 3 (0 – 0.12)

LUBRICANT

N14CD- -

Item	Specified lubricant	Quantity
Grease for the moving points of the accelerator arm	Chassis grease SAE J310, NLGI No.0 or equivalent	As required

SEALANTS AND ADHESIVES

N14CE-B

Item	Specified sealant	Quantity
Accelerator arm bracket bolt hole	3M ART Part No.8659 or equivalent	As required

TROUBLESHOOTING

N14EBDC

BEFORE STARTING TROUBLESHOOTING

The ASC system controls setting and canceling of constant driving speed based on various input signal information.
For this purpose, the electronic control unit (ECU) has the self-diagnosis function to store the causes for canceling of the ASC system operation regardless of whether the system is normal or faulty and to display the causes in predetermined patterns and the input check function to check whether or not the ECU input switch or sensor is normal.
Through effective use of these functions, you can shorten the time taken to troubleshoot, check and repair the system.

SELF-DIAGNOSIS CHECK

The self-diagnosis check is to be made when the ASC system is automatically canceled even if no attempt is made to cancel the system.

Caution
The diagnosis code memory is cleared if the ECU power (ignition switch or MAIN switch) is turned off. Keep the power on, therefore, until the check is completed.

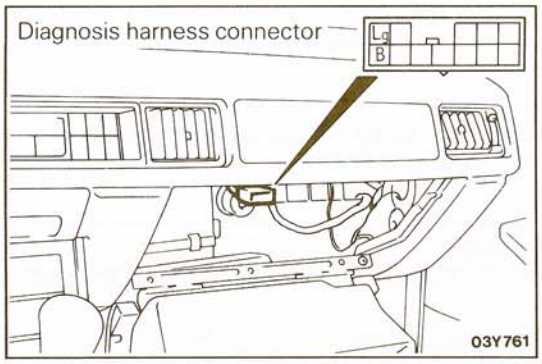

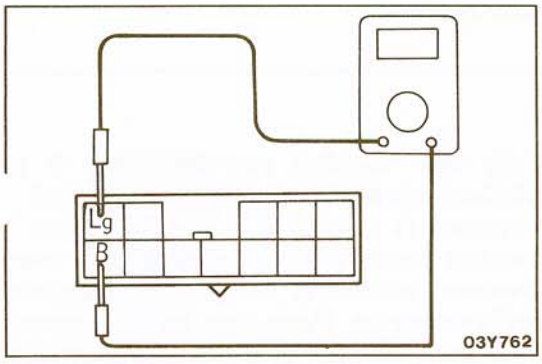

1. Connect a voltmeter between the ASC terminal and ground terminal of the diagnosis harness connector located at the top in the glove compartment.
2. By checking the voltmeter reading against the display patterns shown below, the causes for canceling can be known.
3. In case diagnosis code No. 11, 12, 15 or 16 is displayed, check according to the check chart of number corresponding to that code.

   NOTE
   There are six diagnosis items including those of normal state. The normal states mean such states as code No. 16 being stored as the cancel switch ON signal input when the ASC system is canceled by depressing the brake pedal or code No. 13 or 14 being stored when the ASC system is canceled automatically due to decreased vehicle speed resulting from driving along a sharp hill in the constant speed driving mode.
   In case the system is canceled contrary to the driver's intention, however, the same code No. 16 can mean an open circuit in the stop light switch input wire, stop light switch ON failure or other troubles.

Diagnosis display patterns

Code No.	Display patterns (output codes)	Probable cause
11	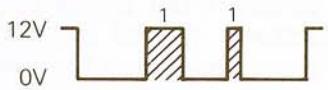	Abnormal condition of actuator drive system
12		Abnormal condition of vehicle speed signal system
13*	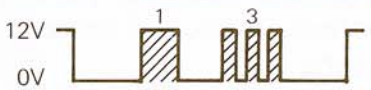	Low-speed limiter activation (The system is normal if it can be reset)
14*		Automatic cancelation activated by vehicle speed reduction (The system is normal if it can be reset)
15*		Control switch malfunction (When SET and RESUME switches switched ON simultaneously)
16*		Cancel switch ON signal input (including stop light switch input wiring damage or disconnection)

03R0193

NOTE

1. Codes indicated by the *symbol are displayed, if the conditions are satisfied, even if the system is normal. either case, the system is normal if it can be reset. If there is an automatic cancelation not intentionally made by the driver, however, excluding cancelations explicitly made by the cancel procedure, there may be a temporary malfunction such as poor contact of a harness connector even though the system can be reset, and for that reason it is necessary to check according to each individual check chart that is applicable.

Display when vehicle speed is approximately 20 km/h (12mph) or higher, or before the ASC system is set.

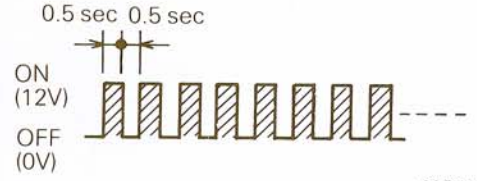

03R0196

2. Diagnosis codes are displayed when, after cancelation of the ASC system, the vehicle speed decreases to less than approximately 40 ± 3 km/h (24.9 ± 1.9 mph), and are erased by switching OFF the ignition switch or the MAIN switch. When, after the diagnosis memory has been erased, the ECU power supply is once again switched ON, the diagnosis output code will change to ON and OFF signals at 0.5-second intervals (as shown in the illustratic at the left) if the ECU is normal, regardless of whether o not the system is normal.

STB Revision

INPUT CHECKING

Input checks should be made when the ASC system cannot be set, and when it is necessary to check (when a malfunction related to the ASC system occurs) whether or not the input signals are normal.

NOTE
1. Input checks can be made by certain fixed operations, and the terminal that outputs the display patterns is also used as the self-diagnosis terminal.
2. Display codes are displayed only if the circuit is normal according to the conditions shown in the table on the next page.

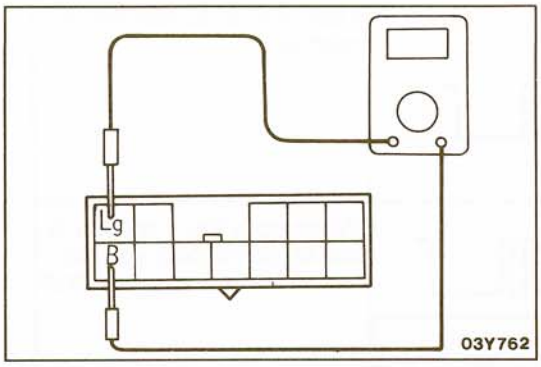

1. Connect a voltmeter between ground and the diagnosis harness connector's ASC terminal (located at the inside upper part of the glove compartment).
2. Turn the ignition key to ON. (Check No. 1 to No. 3 of the input check table.)
3. Start the engine. (Check No. 4 and No. 5 of the input check table.)

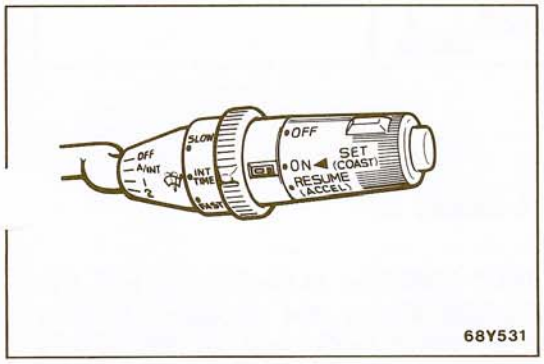

4. Code call-out
   (1) Turn ON the SET switch with the RESUME switch kept ON.
   (2) This procedure makes it possible to display the results of the input check.

   Caution
   The ASC cannot be set during input check display. If it is necessary to check the self-diagnosis, check the input (after checking the diagnosis code) before switching OFF the MAIN switch.
5. Code read-out
   (1) Perform each input operation according to the input check table and read out the codes.

   NOTE
   Each code will be displayed in an order of priority beginning from No. 1.
   If there is no display, it is possible that there is a malfunction of the ECU power-supply circuit or the SET and RESUME switch, so check according to check charts 0, 1 and 2. (Refer to P.14-115.)

Input check table

No.	Input operation	Code No.	Display patterns (output codes)	Check results
1	SET switch ON	21		SET switch circuit normal
2	RESUME switch ON	22		RESUME switch circuit normal
3	Each cancel switch ON 1. Stop light switch (brake pedal depressed) 2. Clutch switch *1 (clutch pedal depressed) 3. Inhibitor switch *2 (shift lever to "N" range)	23		Each cancel switch circuit normal
4	Driving at approximately 40 km/h (25 mph) or higher	24		When both No. 4 and No. 5 can be confirmed, vehicle speed sensor circuit normal
5	Driving at less than approximately 40 km/h (25 mph) or stopped	25	 03R0192	

NOTE
*1: Vehicles with a manual transmission
*2: Vehicles with an automatic transmission

(2) Switch the MAIN switch OFF.

NOTE
1. When each input operation is performed and the signals for the conditions are received by the computer, each output code will be repeatedly displayed in the sequence of priority for as long as that signal continues.
2. If, during the display of output codes, the input operation is canceled (if, for example, the SET switch is set from ON to OFF), the code will be displayed for one cycle of the display, but will not be displayed during the next cycle.
   This makes it possible, therefore, to check the OFF condition (existence or not of a short-circuit of the input line or the switch).
3. The standard input check procedures and the display patterns at that time are shown on the following page.

Input Check Procedures and Display Pattern Examples (when system is normal)

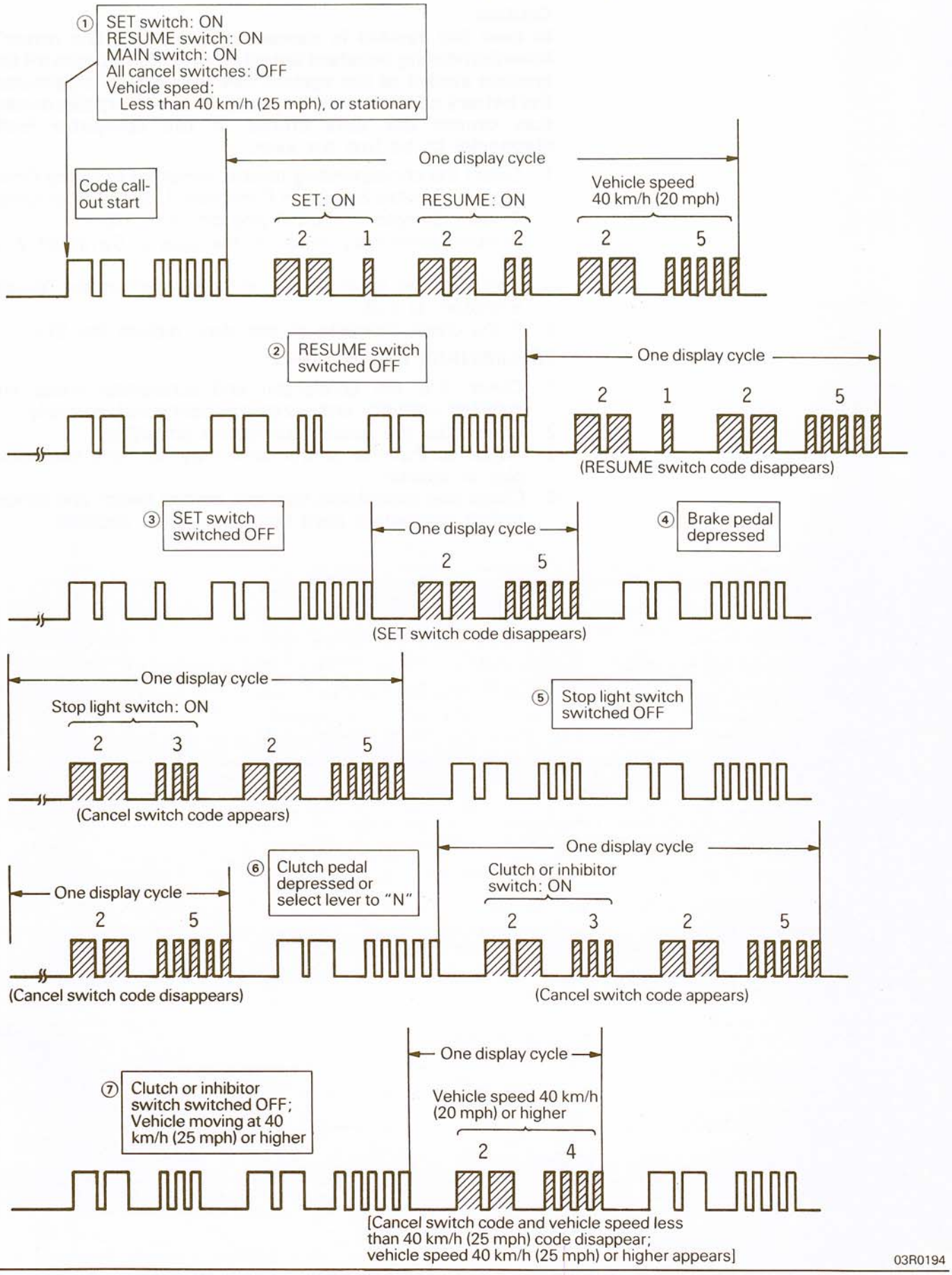

03R0194

STB Revision

HOW TO TROUBLESHOOT

Caution

In case the system is canceled contrary to the driver's intention during constant speed driving, do not turn off the ignition switch or the system MAIN switch or disconnect the battery as such switch operation or battery disconnection causes the data stored in the computer (self-diagnosis) to be lost for ever.

1. Select the corresponding trouble symptom from the Flowchart by Trouble Symptom (Symptom 1, 2) and from Other Trouble Symptom Chart (Symptom 3 to 10).
2. Perform preliminary check (in the case of Symptom 2 to 10).
3. Check in the order shown in the Flowchart by Trouble Symptom or List.
4. If the check indicates all are okay, replace the ECU.

PRELIMINARY INSPECTIONS

1. Check that the accelerator and accelerator wires are installed normally and wires are connected normally.
2. Check that the accelerator moves smoothly.
3. Adjust so that the control cable may not have excessive play or tension.
4. Check that control unit, actuator, control switch and cancel switch connectors have been connected securely.

FLOWCHART BY TROUBLE SYMPTOM

SYMPTOM 1

ASC system is canceled without canceling operation or ASC system cannot be set after it has been automatically canceled

ASC: Automatic speed control
ECU: Electronic control unit

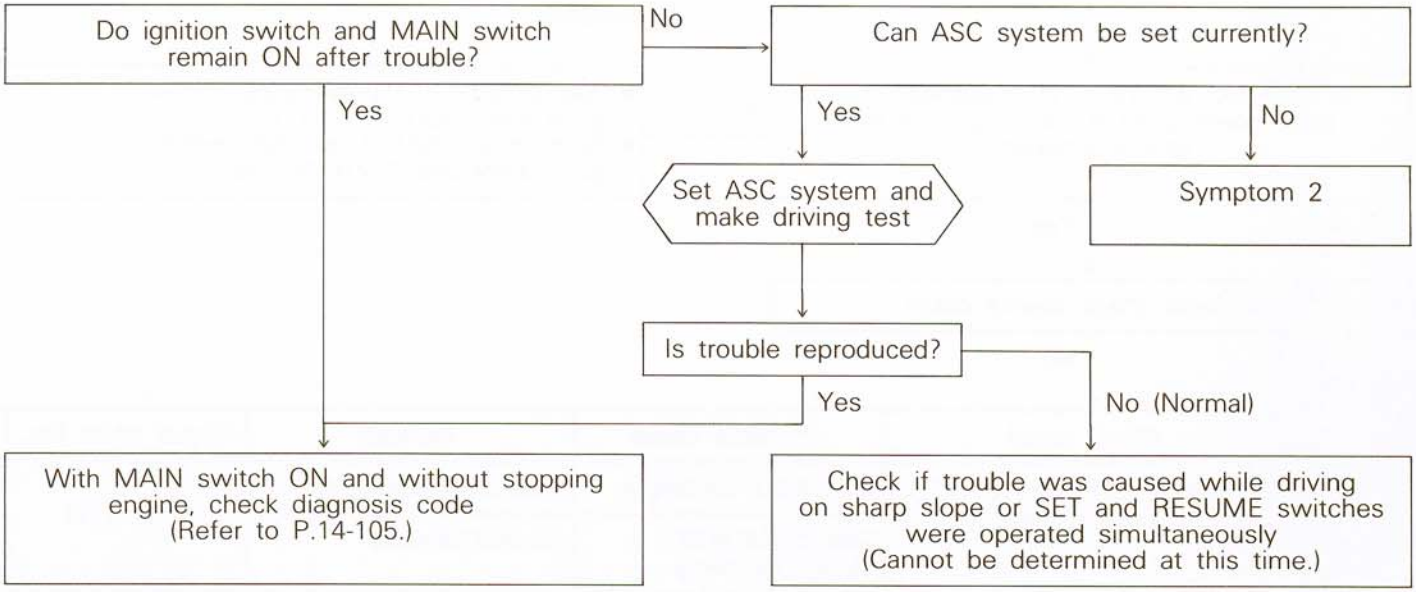

SYMPTOM 2

ASC system cannot be set

Prepare for input check (Refer to P.14-107.)

Is code No. 21, 22 or 25 displayed when input check code is called up with the vehicle stopped?

No → • Open circuit in ECU power supply circuit [go to check chart 0 (P.14-115)]
• Open circuit in SET or RESUME switch [go to check chart 1, 2 (P.14-116)]

Yes

Are input check results okay?

Yes

No

Check result	Probable cause	Remedy	Check chart No.
Code No. 21 does not go out when SET switch is turned off	SET switch ON failure	Replace control switch	1 (P.14-116)
	Short circuit in SET switch input wire	Correct harness	
Code No. 22 does not go out when RESUME switch is turned off	RESUME switch ON failure	Replace control switch	2 (P.14-117)
	Short circuit in RESUME switch input wire	Correct harness	
Code No. 23 does not go out when cancel switch is turned off	Cancel circuits faulty (ON failure)	Check and correct cancel circuits	5-1, 5-2, 5-3 (P.14-122)
Code No. 2 does not go out and code No. 24 is not displayed when vehicle speed is increased to 40 km/h (20 mph) or more	Vehicle speed sensor circuit faulty (open or short circuit)	Check and correct vehicle speed sensor circuit	3 (P.14-118)

- Check actuator circuit [go to check chart No. 4 (P.14-120)]
- Check vacuum circuit [go to check chart No. 7 (P.14-128)]
- Check vacuum pump circuit [go to check chart No. 6 (P.14-126)]

NOTE
If the ignition switch and MAIN switch are kept ON after occurrence of the trouble, the system that is responsible for canceling can be known by checking the diagnosis output code.
This chart indicates troubleshooting method in case self-diagnosis function is not available.

NOTE
If results of each circuit check and independent part check are okay, replace the electronic control unit (ECU).

STB Revision

OTHER TROUBLE SYMPTOM CHART

No.	Symptom	Probable cause	Check method	Remedy
3	• Set speed deviates much toward high or low speed side • Hunting occurs when speed is set (acceleration and deceleration are repeated)	Vehicle speed sensor circuit faulty	Check according to check chart No. 3 (P.14-118)	Correct vehicle speed sensor system or replace part
		Speedometer cable or speedometer driven gear faulty		
		Actuator circuit poor contact	Check according to check chart No. 4 (P.14-120)	Correct actuator system or replace part
		Actuator faulty		
		Vacuum circuit faulty	Check according to check chart No. 6, 7 (P.14-126)	Correct vacuum system or replace part
		ECU faulty	–	Replace ECU
4	ASC system is not canceled when brake pedal is depressed	Open circuit in stop light switch or ASC brake switch ON failure (short circuit)	Check input code No. 23 (P.14-107) If result is NG, check according to check chart No. 5-1 (P.14-122)	Correct harness or replace stop light switch
		Short circuit in actuator clutch coil drive circuit	Check according to check chart No. 4 (P.14-120)	Correct harness or replace actuator
		ECU faulty	–	Replace ECU
5	ASC system is not canceled when clutch pedal is depressed (vehicles with a manual transmission) [ASC system is canceled, however, when brake pedal is depressed]	Open circuit in clutch switch input circuit	Check input code No. 23 (P.14-107) If result is NG, check according to check chart No. 5-2 (P.14-123)	Correct harness, or correct or replace clutch switch
		Clutch switch installed incorrectly (fails to turn on)		
		ECU faulty	–	Replace ECU
6	ASC system is not canceled when shift lever is set to "N" (vehicles with an automatic transmission) [ASC system is canceled, however, when brake pedal is depressed]	Open circuit in inhibitor switch input circuit	Check input code No. 23 (P.14-107) If result is NG, check according to check chart No. 5-3 (P.14-124)	Correct harness, or correct or replace inhibitor switch
		Inhibitor switch adjusted incorrectly		
		ECU faulty	–	Replace ECU
7	Speed cannot be reduced by SET switch (coast)	Temporary open circuit in SET switch input circuit	Check according to check chart No. 1 (P.14-116)	Correct harness or replace SET switch
		Poor actuator circuit contact	Check according to check chart No. 4 (P.14-120)	Correct harness or replace actuator
		Actuator faulty		
		ECU faulty	–	Replace ECU

No.	Symptom	Probable cause	Check method	Remedy
8	ACCEL or RESUME by SET switch is impossible	Open or short circuit in RESUME switch input circuit	Check according to check chart No. 2 (P.14-117)	Correct harness or replace RESUME switch
		Poor actuator circuit contact	Check according to check chart No. 4 (P.14-120)	Correct harness or replace actuator
		Actuator faulty		
		ECU faulty	–	Replace ECU
9	ASC system can be set or is not automatically canceled when vehicle speed is below 40 km/h (20 mph)	Vehicle speed sensor circuit faulty	Check according to check chart No. 3 (P.14-118)	Correct vehicle speed sensor system or replace part
		Speedometer cable or speedometer driven gear faulty		
		ECU faulty	–	Replace ECU
10	When ASC system is set while driving over about 110 km/h (68 mph), vehicle is decelerated to about 110 km/h (68 mph) and keeps that speed	Open circuit in ECU terminal No. 6 (High-speed change-over input terminal) grounding wire	Check ECU terminal No. 6 grounding wire	Correct harness
		ECU faulty	–	Replace ECU

0. Checking ECU power supply circuit

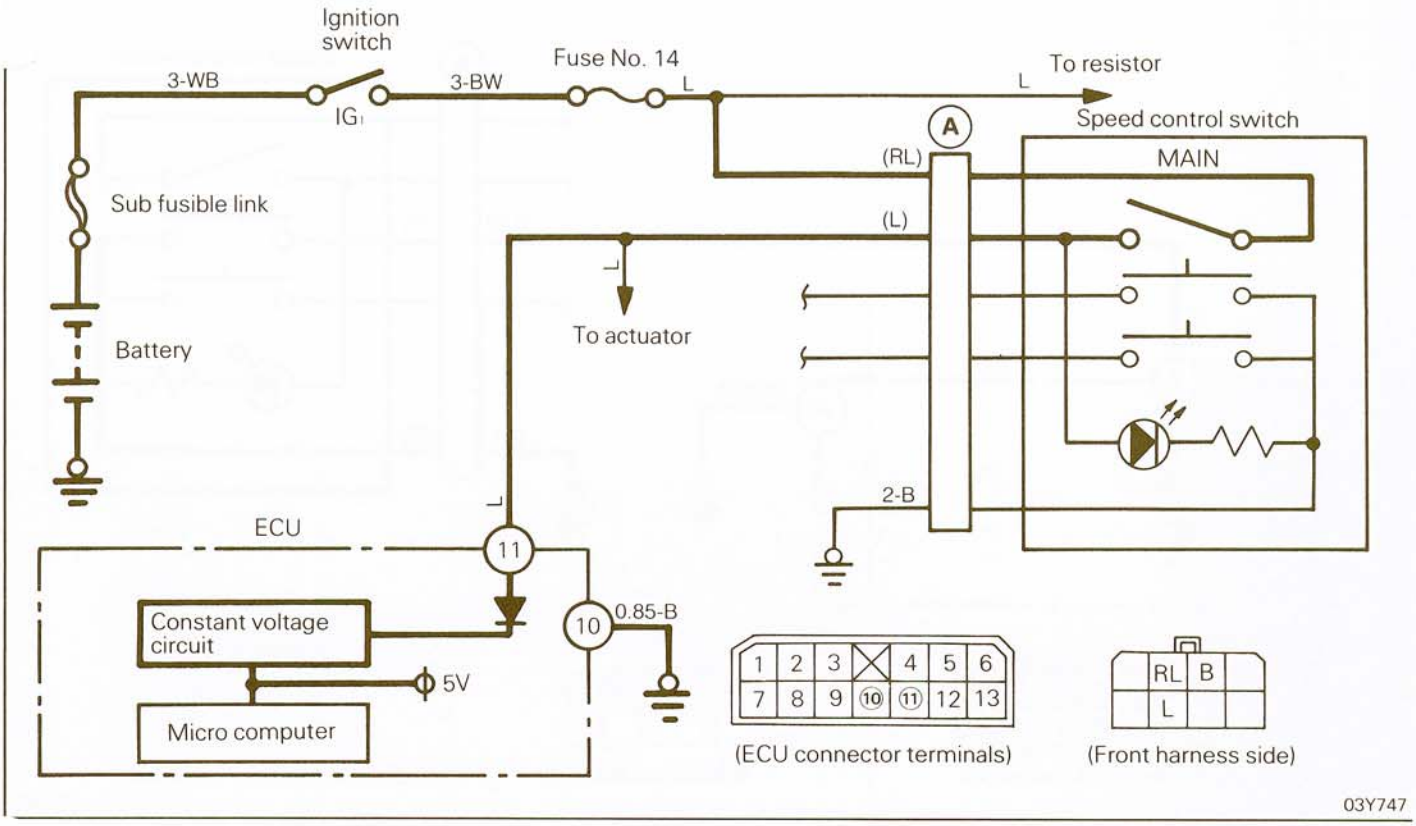

Step	Check method		Judgement		Probable cause	Remedy
	Condition	Check item	Normal	Faulty		
1	Ignition switch: ON position	Ⓐ connector terminal voltage [(RL) – Ground]	Battery voltage	0 V	Blown fuse No. 14	Replace fuse
					Open circuit in harness	Correct harness
2	Ignition switch: ON position MAIN switch: ON ↔ OFF	Ⓐ connector terminal voltage [(L) – Ground]	Battery voltage ↕ 0 V	Remains at battery voltage	Open or short circuit in MAIN switch or harness	Replace speed control switch or correct harness (Refer to P.14-142.)
				Remains at 0 V		
3	Ignition switch: ON position MAIN switch: ON position	ECU terminal voltage (11 – Ground)	Battery voltage	0 V	Open circuit in harness	Correct harness
4	Ignition switch: OFF position Disconnect ECU harness connector	ECU ground circuit continuity (10 – Ground)	With continuity (0 Ω)	Without continuity (∞ Ω)	Open circuit in harness	Correct harness

NOTE
1. If the diagnosis codes or input check codes can be confirmed, the ECU power supply circuit can be judged as normal. In this case, checking with this chart is unnecessary.
2. For measurement of the terminal voltage or continuity test, use extra-fine check probes and apply them to correct terminals.
3. If all above check results are normal, the ECU power supply circuit is okay.

1. Checking SET switch circuit

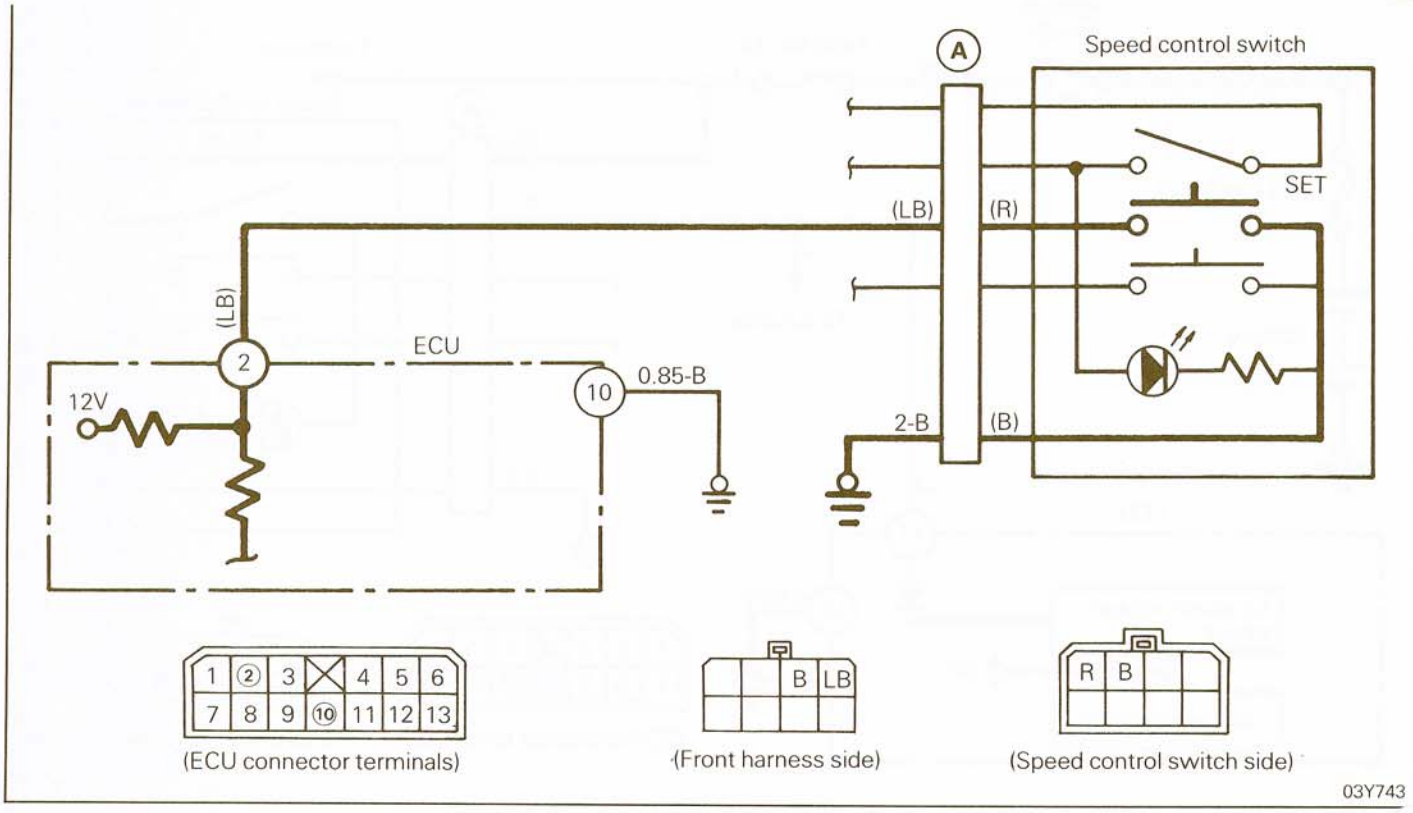

Step	Check method		Judgement		Probable cause	Remedy
	Condition	Check item	Normal	Faulty		
1	Ignition switch: OFF position Ⓐ connector: Disconnect SET switch: ON ↔ OFF	Continuity between Ⓐ connector terminals [(R) – (B)]	With continuity (0 Ω) ↕ Without continuity (∞ Ω)	With continuity, remaining at 0 Ω	Open or short circuit in SET switch or harness	Replace speed control switch or correct harness (Refer to P.14-142.)
				Without continuity, remaining at ∞ Ω		
2	Ignition switch: OFF position Ⓐ connector: Connect ECU connector: Disconnect SET switch: ON ↔ OFF	Continuity between ECU terminal and ground (2 – Ground)	With continuity (0 Ω) ↕ Without continuity (∞ Ω)	With continuity, remaining at 0 Ω	Short circuit in wire (LB) between ECU and Ⓐ connector	Correct harness
				Without continuity, remaining at ∞ Ω	Short circuit in Ⓐ connector wire 2-B or wire (LB) between ECU and Ⓐ connector	Correct harness

NOTE
1. If the indicator light comes on when the MAIN switch is turned on with the ignition switch in the ON position, the Ⓐ connector 2-B wire is okay.
2. For measurement of the terminal voltage or continuity test, use extra-fine check probes and apply them to correct terminals.
3. If all above check results are normal, the SET switch circuit is okay.

2. Checking RESUME switch circuit

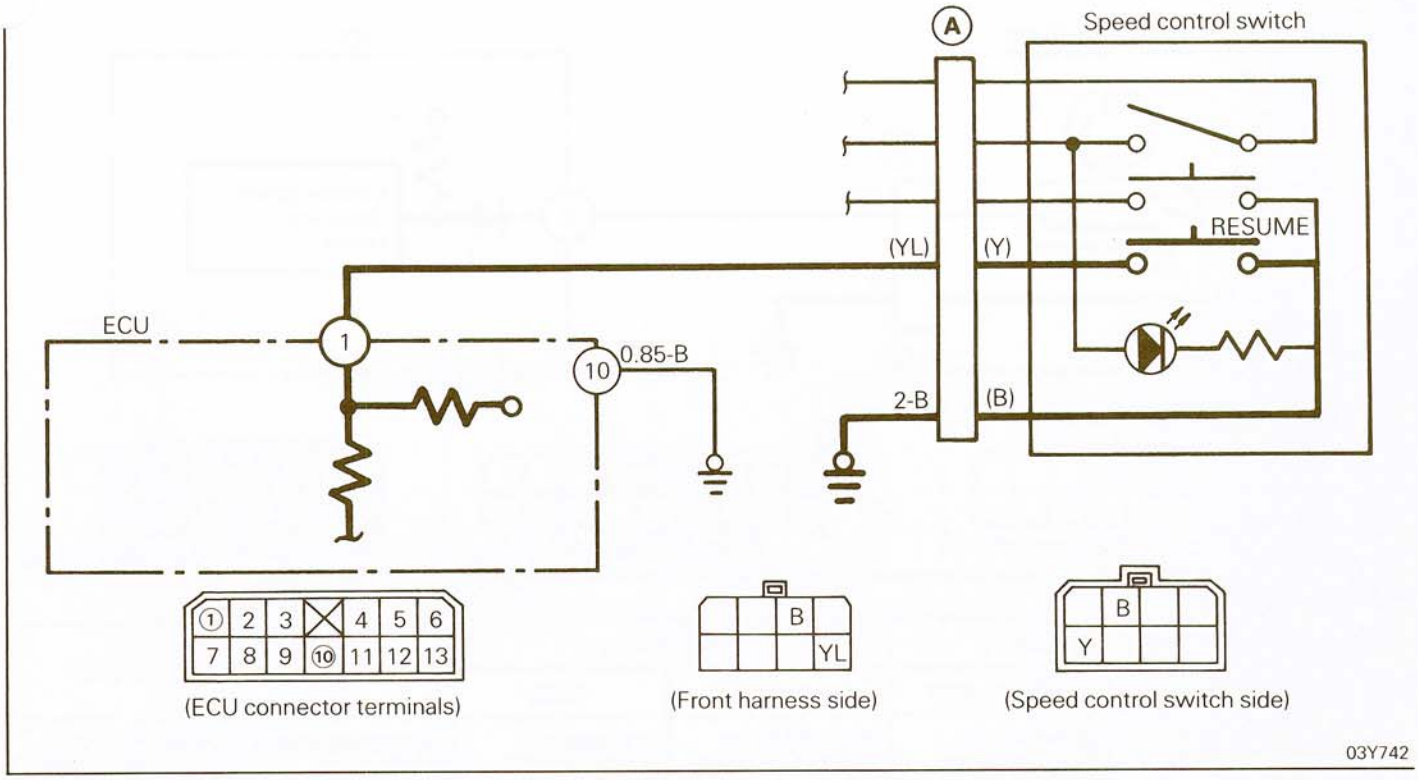

03Y742

Step	Check method		Judgement		Probable cause	Remedy
	Condition	Check item	Normal	Faulty		
1	Ignition switch: OFF position Ⓐ connector: Disconnect RESUME switch: ON ↔ OFF	Continuity between Ⓐ connector terminals [(Y) – (B)]	With continuity (0 Ω) ↕ Without continuity (∞ Ω)	With continuity, remaining at 0 Ω	Open or short circuit in RESUME switch or harness	Replace speed control switch or correct harness (Refer to P.14-142.)
				Without continuity, remaining at ∞ Ω		
2	Ignition switch: OFF position Ⓐ connector: Connect ECU connector: Disconnect RESUME switch: ON ↔ OFF	Continuity between ECU terminal and ground (1 – Ground)	With continuity (0 Ω) ↕ Without continuity (∞ Ω)	With continuity, remaining at 0 Ω	Short circuit in wire (YL) between ECU and Ⓐ connector	Correct harness
				Without continuity, remaining at ∞ Ω	Short circuit in Ⓐ connector wire 2-B or wire (YL) between ECU and Ⓐ connector	Correct harness

NOTE
1. If the indicator light comes on when the MAIN switch is turned on with the ignition switch in the ON position, the Ⓐ connector 2-B wire is okay.
2. For measurement of the terminal voltage or continuity test, use extra-fine check probes and apply them to correct terminals.
3. If all above check results are normal, the RESUME switch circuit is okay.

3. Checking vehicle speed sensor circuit

(1) Models equipped with an analog speedometer (reed switch type vehicle speed sensor)

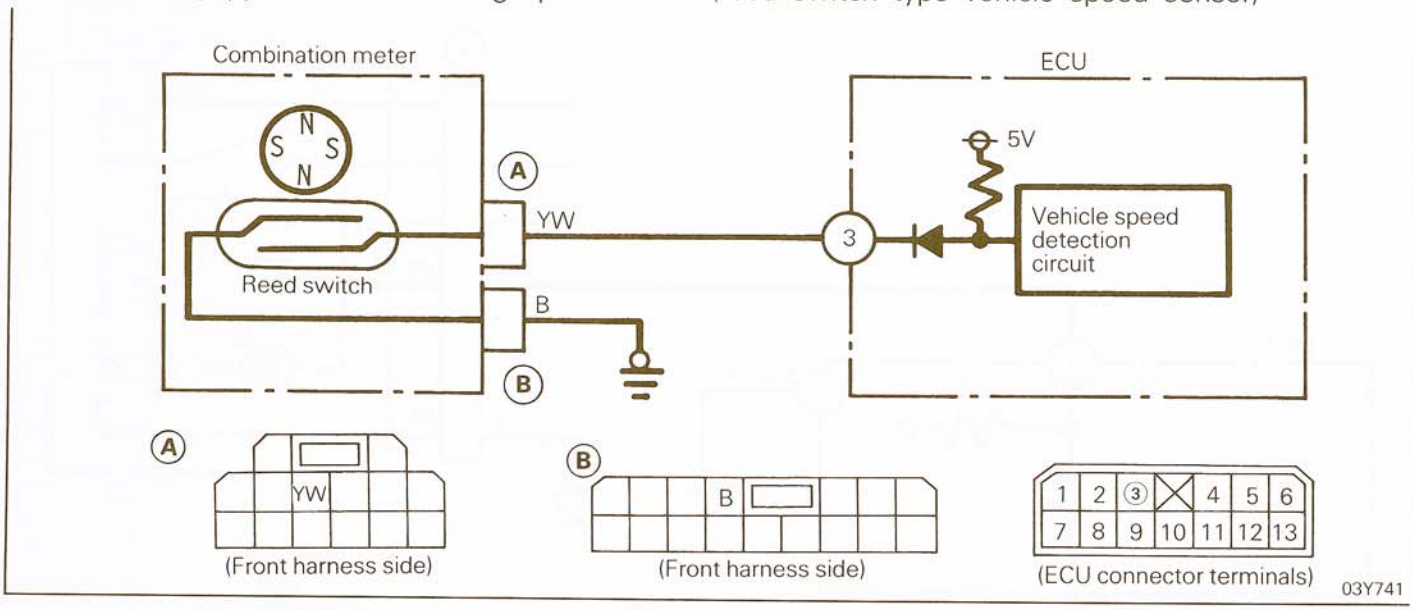

Step	Check method		Judgement		Probable cause	Remedy
	Condition	Check item	Normal	Faulty		
1	Drive with MAIN switch in OFF position	Speedometer indication error (Refer to Service Manual Vol. 2 GROUP 8 ELECTRICAL – Meters and gauges.)	When driving at 40 km/h (25 mph), $+4_{0}$ km/h, ±1.5 mph	Error exceeds specified limit or large pointer deflection	Poor speedometer cabling or oil entering	Correct or replace speedometer cable (Refer to GROUP 21 TRANSMISSION – Service Adjustment Procedures.)
					Speedometer driven gear faulty	Replace speedometer driven gear (Refer to GROUP 21 TRANSMISSION – Speedometer Sleeve Assembly.)
2	Disconnect speedometer cable from transmission Ignition switch: ON position MAIN switch: OFF position	ECU terminal voltage (3 – Ground) when speedometer inner cable is turned slowly	10 V or more ↕ 0 V (changes 4 times per every cable rotation)	Remains at 10 V or more	Open circuit in vehicle speed sensor (reed switch) or in harness	Replace meter assembly or correct harness (Refer to Service Manual Vol. 2 GROUP 8 ELECTRICAL – Meters and Gauges.)
				Remains at 0 V	Short circuit in vehicle speed sensor (reed switch) or in harness	
				Unstable voltage change	Poor connector terminal contact	Check connector terminal contact pressure and correct

NOTE
1. For measurement of the ECU terminal voltage, use extra-fine check probes and apply them to correct terminals.
2. If all above check results are normal, the vehicle speed sensor system is okay.

Caution
When speedometer indication error is checked with a speedometer tester, apply chocks to the driver wheels to prevent the car from running away.

STB Revision

(2) Models equipped with a digital speedometer (pulse generator type vehicle speed sensor)

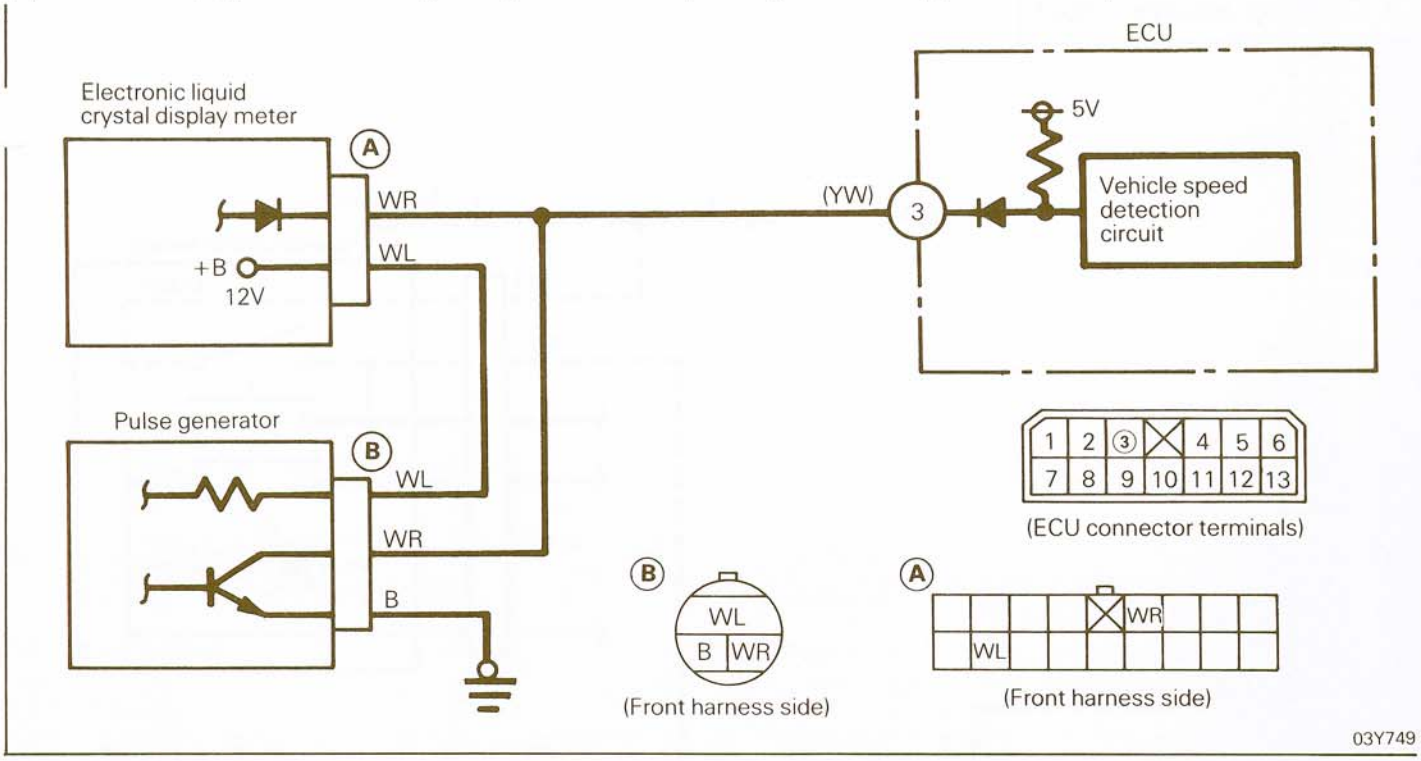

Step	Check method		Judgement		Probable cause	Remedy
	Condition	Check item	Normal	Faulty		
1	Ignition switch: ON position	Ⓑ connector terminal voltage (WL – Ground)	Battery voltage	0 V	Open circuit in harness	Correct harness
					Electronic meter, ECU faulty	Replace electronic meter assembly (Refer to Service Manual Vol. 2 GROUP 8 ELECTRICAL – Meters and gauges.)
2	Remove pulse generator together with connector from transmission Ignition switch: ON position MAIN switch: ON position	ECU terminal voltage (3 – Ground) when pulse generator shaft is rotated slowly	3.5 V or more ↕ 0 V (Changes 4 times per every shaft rotation)	Remains at 3.5 V or more	Faulty pulse generator or open circuit in harness	Replace pulse generator or correct harness
				Remains at 0 V	Faulty pulse generator or short circuit in harness	
3	Drive with MAIN switch in OFF position	Speedometer indication error (Refer to Service Manual Vol. 2 GROUP 8 ELECTRICAL – Meters and Gauges.)	When driving at 40 km/h (25 mph), $+3\ 0$ km/h, $+2.25\ -0.25$ mph	Error exceeds specified limit or large meter indication variations	Poor connector terminal contact	Check connector terminal contact pressure and correct
					Speedometer driven gear faulty	Replace speedometer driven gear (Refer to GROUP 21 TRANSMISSION – Speedometer Sleeve Assembly.)

Caution
When speedometer indication error is checked with a speedometer tester, apply checks to the driven wheels to prevent the car from running away.

4. Checking actuator circuit

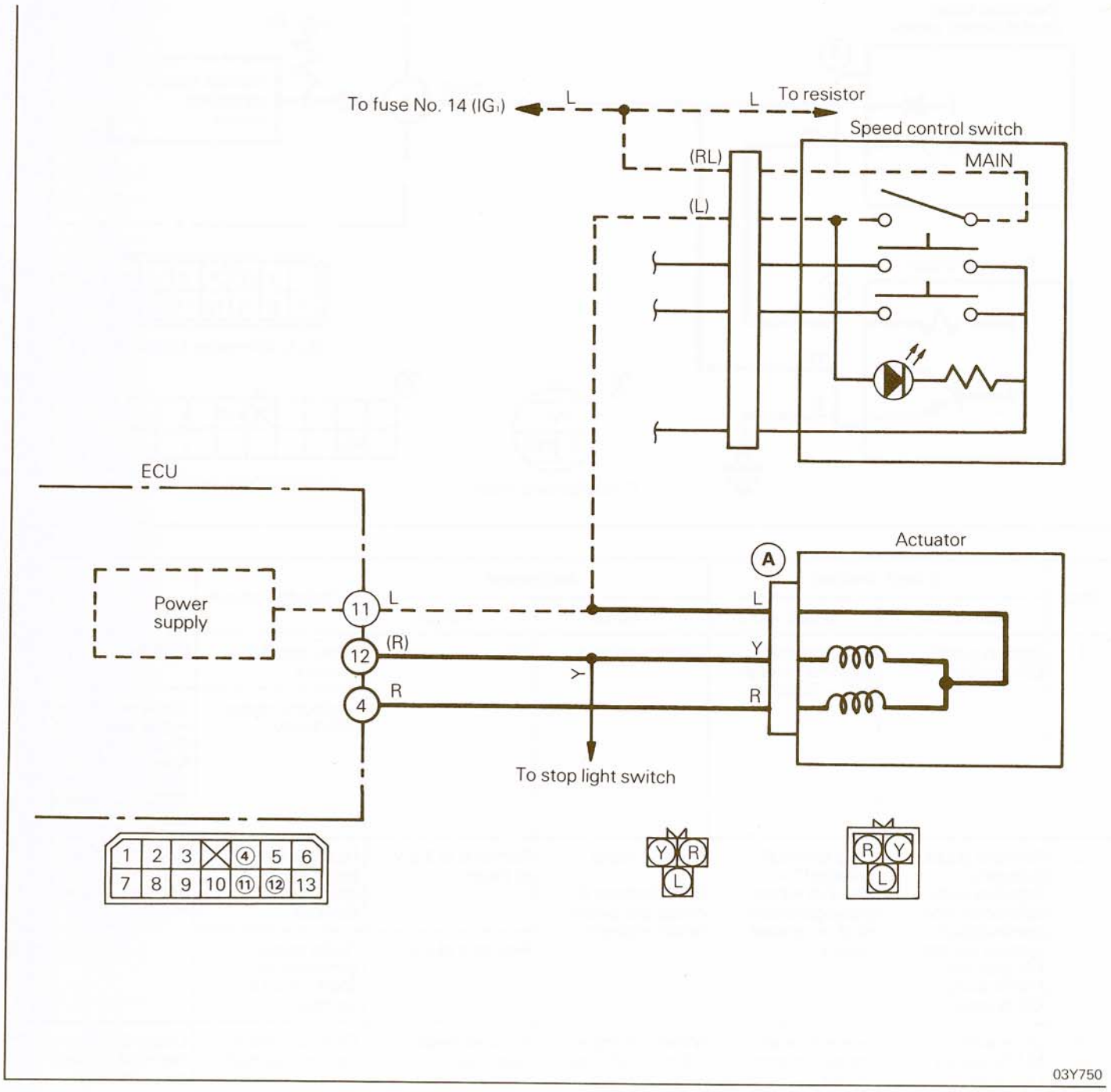

NOTE
The following check chart assumes that the circuit (ECU power supply circuit) indicated by broken lines in the illustration is normal.

Step	Check method		Judgement		Probable cause	Remedy
	Condition	Check item	Normal	Faulty		
1	Disconnect ECU harness connector Ignition switch: ON position MAIN switch: ON position	Ⓐ connector (harness side) terminal voltage (L – Ground)	Battery voltage	0 V	Open circuit in harness L wire between column switch and Ⓐ connector	Correct harness
2	Ignition switch: OFF position Disconnect Ⓐ connector	Resistance between Ⓐ connector (actuator side) terminals (of solenoid) (L – R) (L – Y)	Approx. 30 Ω (L – R) Approx. 60 Ω (L – Y)	∞ Ω	Open circuit in solenoid	Replace actuator (Refer to P.14-142.)
				Resistance too small	Short circuit in solenoid	
3	Connect Ⓐ connector and disconnect ECU harness connector Ignition switch: ON position MAIN switch: ON position	ECU terminal voltage (12 – Ground) (4 – Ground)	Battery voltage	0 V	Open circuit in harness [(R), Y, R] wires between actuator and ECU	Correct harness

NOTE
For measurement of the ECU terminal voltage or resistance, use extra-fine check probes and apply them to correct terminals.

5-1. Checking stop light switch circuit

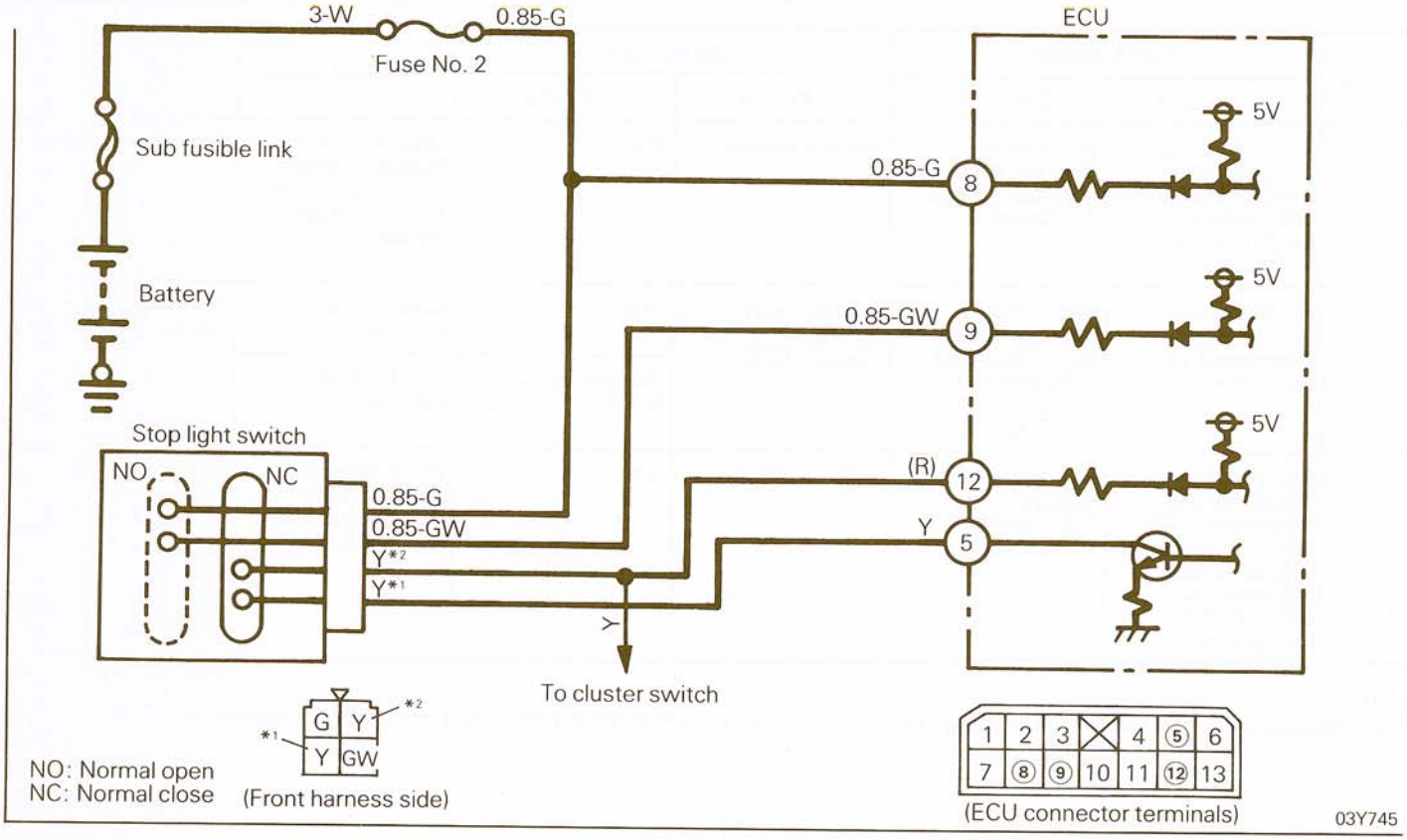

Step	Check method		Judgement		Probable cause	Remedy
	Condition	Check item	Normal	Faulty		
1	Disconnect ECU harness connector	ECU harness side connector terminal voltage (8 – Ground)	Battery voltage	0 V	Open circuit in harness between fuse No. 2 and ECU terminal No. 8	Correct harness
					Blown fuse No. 2	Replace fuse
2	Disconnect ECU harness connector ON ↔ OFF	ECU harness side connector terminal voltage (9 – Ground)	Battery voltage ↕ 0 V	Remains at battery voltage	Stop light switch ON failure	Replace stop light switch
				Remains at 0 V	Open circuit in stop light switch or incorrect installation	Replace stop light switch or correct installation
					Open circuit in harness	Correct harness
3	Disconnect ECU harness connector Stop light switch: ON ↔ OFF	Continuity between ECU terminals (5 – 12)	With continuity (0 Ω) ↕ Without continuity (∞ Ω)	Remains with continuity (0 Ω)	Stop light switch ON failure	Replace stop light switch
				Remains without continuity (∞ Ω)	Open circuit in stop light switch or incorrect installation	Replace stop light switch or correct installation
					Open circuit in harness	Correct harness

NOTE
1. For measurement of the terminal voltage, use extra-fine check probes and apply them to correct terminals.
2. If all above check results are normal, the stop light switch circuit is normal (the stop light must come on).

STB Revision

5-2. Checking clutch switch circuit

Vehicles with a manual transmission

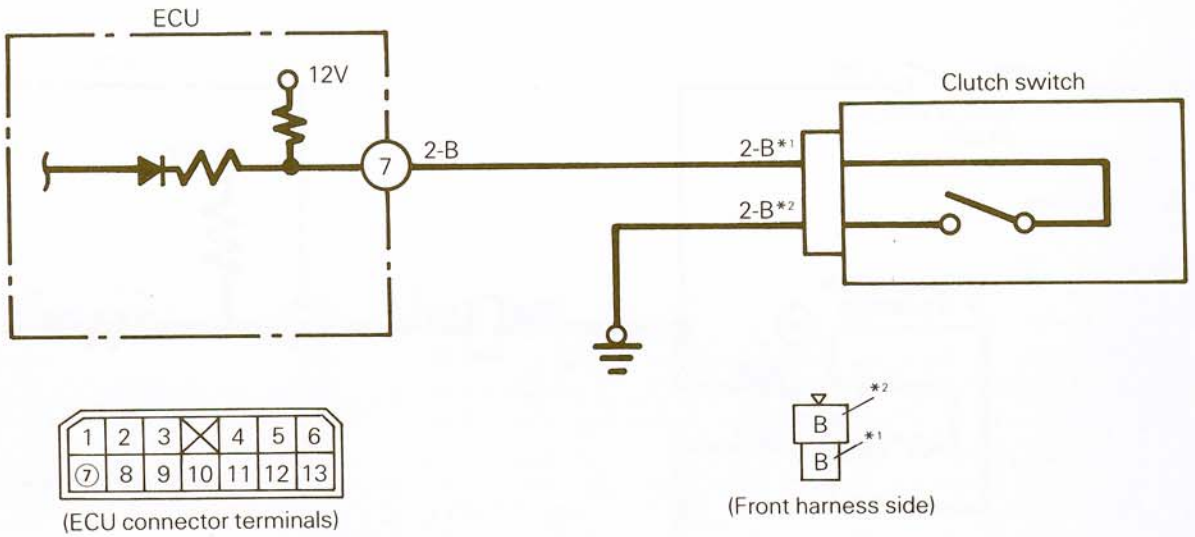

03Y744

Step	Check method		Judgement		Probable cause	Remedy
	Condition	Check item	Normal	Faulty		
1	Disconnect ECU harness connector	Continuity between ECU harness side terminal and ground (7 – Ground) when clutch switch is turned ON ↔ OFF	With continuity (0 Ω) ↕ Without continuity (∞ Ω)	Remains with continuity (0 Ω)	Clutch switch ON failure	Replace clutch switch
				Remains without continuity (∞ Ω)	Open circuit in clutch switch or incorrect installation	Replace clutch or correct installation
					Open circuit in harness	Correct harness

NOTE
1. For measurement of the terminal voltage, use extra-fine check probes and apply them to correct terminals.
2. If all above check results are normal, the clutch switch circuit is normal.

5-3. Checking inhibitor switch circuit

Vehicles with an automatic transmission

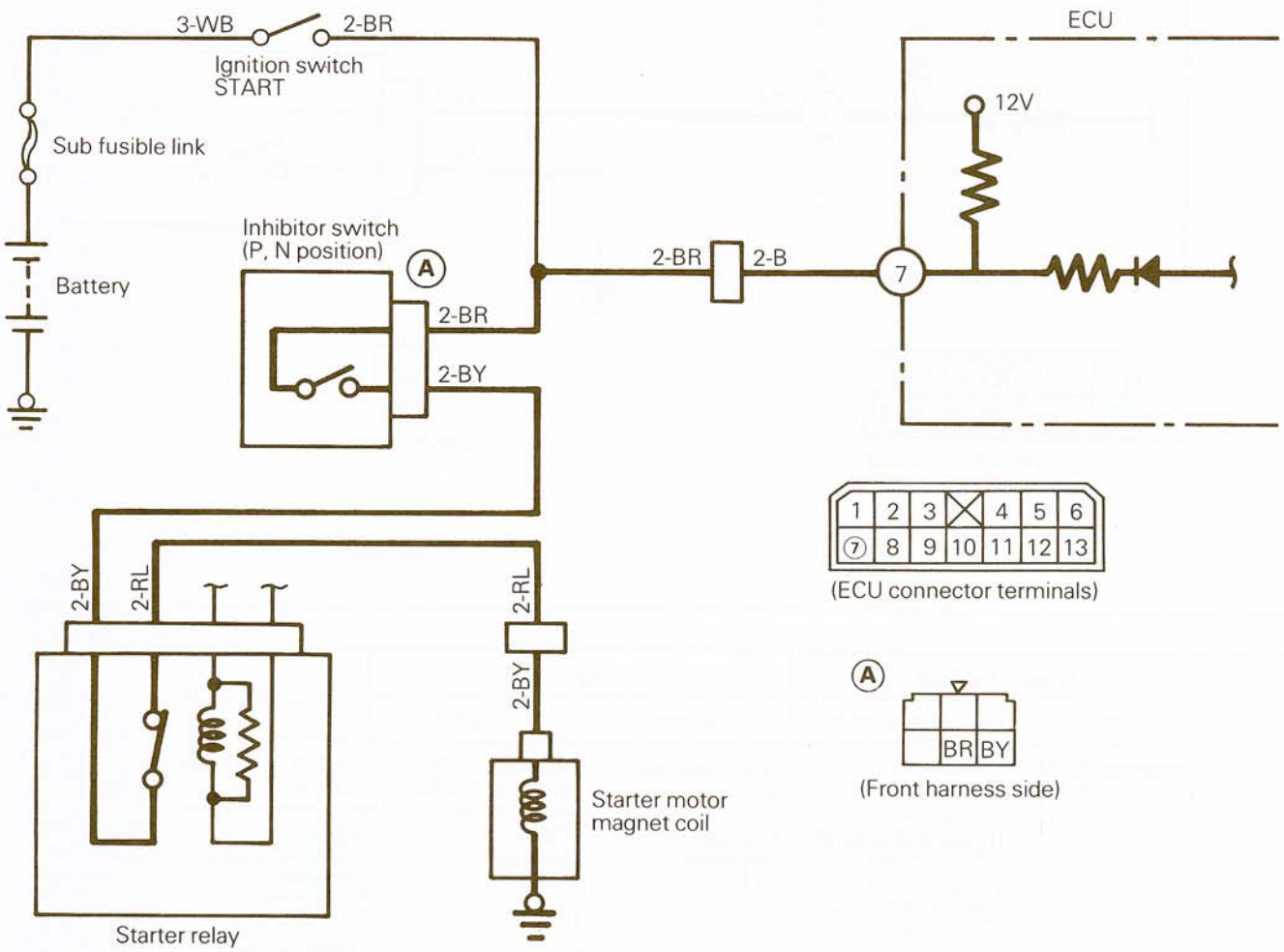

03Y746

Step	Check method		Judgement		Probable cause	Remedy
	Condition	Check item	Normal	Faulty		
1	Selector lever at P or N	Starter motor rotates when ignition switch is set at START	Motor rotates	Motor does not rotate	Starting circuit faulty	Refer to Service Manual Vol. 2 GROUP 8 ELECTRICAL – Starting System.
2	Selector lever at D, 2 or L	Starter motor rotates when ignition switch is set at START	Motor does not rotates	Motor rotates	Inhibitor incorrectly adjusted	Refer to GROUP 21 TRANSMISSION – Service Adjustment Procedures.
3	Disconnect ECU harness connector Selector lever at P or N	Continuity between ECU harness side connector terminal and ground (7 – Ground)	With continuity (0 Ω)	Without continuity (∞ Ω)	Open circuit in harness between ECU and inhibitor switch	Correct harness

NOTE
If all above check results are normal, the inhibitor switch circuit is normal.

6. Checking vacuum switch, pump and relay circuit

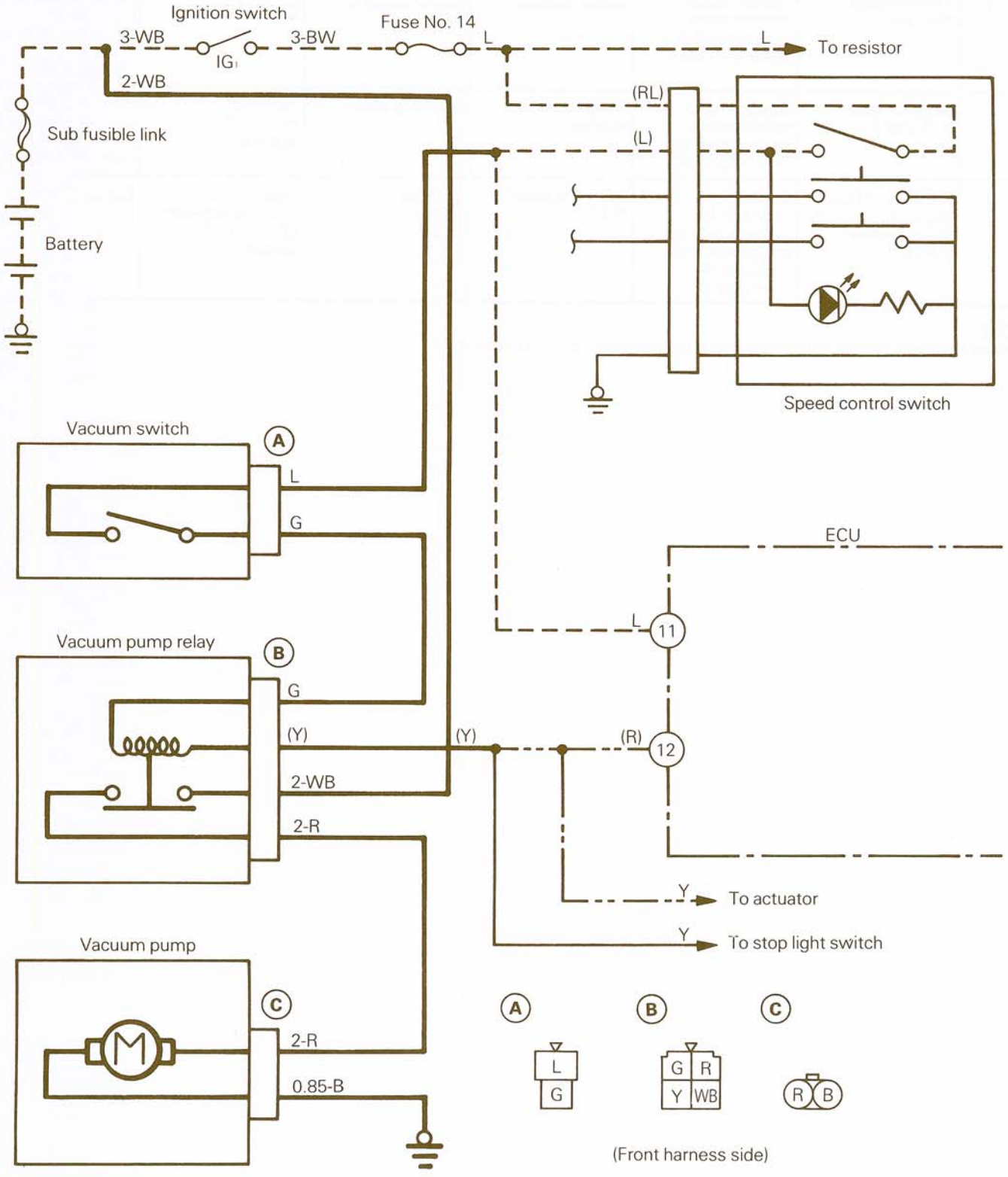

03Y748

NOTE
The following check chart assumes that the circuit (ECU power supply circuit) indicated by broken lines and the circuit (actuator circuit) indicated by double-dot-and-dash lines in the illustration are normal.

Step	Check method		Judgement		Probable cause	Remedy
	Condition	Check item	Normal	Faulty		
1	Disconnect ECU harness connector Ignition switch: ON position MAIN switch: ON position	Ⓐ connector terminal voltage (L – Ground)	Battery voltage	0 V	Open circuit in harness L wire between column switch and Ⓐ connector	Correct harness
2	Disconnect ECU harness connector and disconnect vacuum switch piping Ignition switch: ON position MAIN switch: ON position	Ⓐ connector terminal voltage (G – Ground)	Battery voltage	0 V	Open circuit in vacuum switch	Replace vacuum switch (Refer to P.14-142.)
3	Disconnect ECU harness connector and disconnect vacuum switch piping Ignition switch: ON position MAIN switch: ON position	Ⓑ connector terminal voltage (G – Ground)	Battery voltage	0 V	Open circuit in harness G wire between Ⓐ connector and Ⓑ connector	Correct harness
4	Disconnect ECU harness connector and disconnect vacuum switch piping Ignition switch: ON position MAIN switch: ON position	Ⓑ connector terminal voltage [(Y) – Ground]	Battery voltage	0 V	Open circuit in vacuum pump relay coil	Replace vacuum pump relay
5	Disconnect ECU harness connector and disconnect vacuum switch piping Ignition switch: ON position MAIN switch: ON position	ECU terminal voltage (12 – Ground)	Battery voltage	0 V	Open circuit in harness (Y) wire	Correct harness
6	Disconnect ECU harness connector and disconnect vacuum switch piping Ignition switch: ON position MAIN switch: ON position	Ⓒ connector terminal voltage (R – Ground)	Battery voltage	0 V	Open circuit in harness 2-WB or 2-R wire or poor vacuum pump relay contact	Correct harness or replace vacuum pump relay
7	Disconnect Ⓒ connector	Continuity between Ⓒ connector and ground (B – Ground)	With continuity (0 Ω)	Without continuity (∞ Ω)	Open circuit in harness 0.85-B wire	Correct harness

NOTE
1. For measurement of the terminal voltage or continuity test, use extra-fine check probes and apply them to correct terminals.
2. If all above check results are normal, the vacuum pump is suspected faulty. Then, check the vacuum pump. (Refer to P.14-139.)

STB Revision

7. Checking vacuum circuit

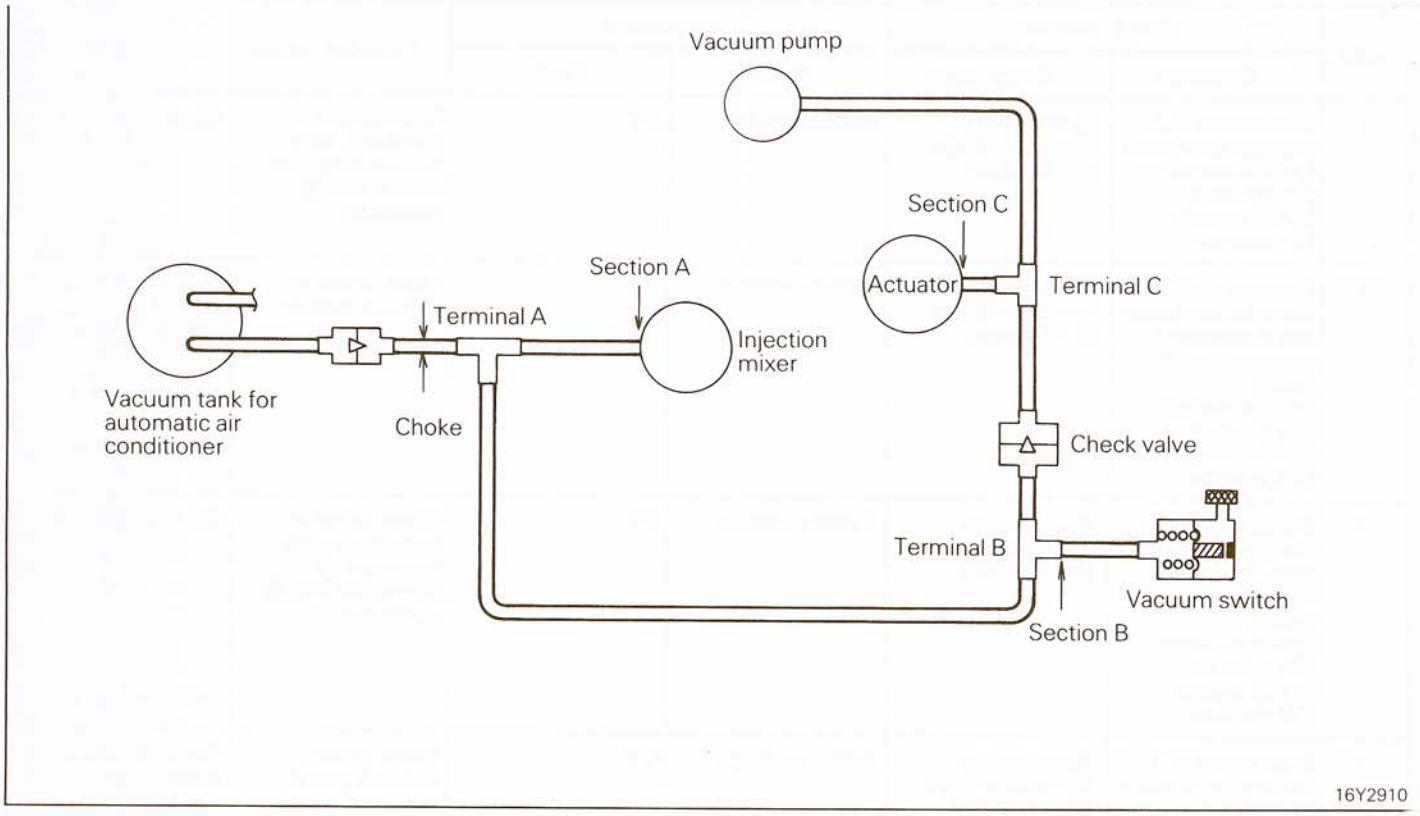

Step	Check method		Judgement		Probable cause	Remedy
	Condition	Check item	Normal	Faulty		
1	Disconnect terminal B at section B Apply vacuum to switch side using a hand vacuum pump	Generation of vacuum	Generated	Not generated	Faulty vacuum switch	Replace vacuum switch
2	Choke automatic air conditioner side of terminal A Connect section B of terminal B Disconnect section A Apply positive pressure to section A on pipe side using a hand vacuum pump	Generation of positive pressure	Generated	Not generated	Check valve faulty, terminal A, B faulty, vacuum pipe (check mixer) faulty	Replace check valve Replace terminal A, B Replace vacuum pipe valve to injection
3	Disconnect section C of actuator Apply vacuum to pipe side of section C using a hand vacuum pump	Generation of vacuum	Generated	Not generated	Vacuum pump faulty, terminal C faulty, vacuum pipe (vacuum pump to check valve and terminal C to actuator) faulty	Replace vacuum pump Replace terminal C Replace vacuum pipe

NOTE
1. Check that connectors and vacuum hose are free of detrimental cracks or collapse.
2. If all above check results are normal, check the actuator. (Refer to P.14-138.)

CIRCUIT DIAGRAM

N14EC-A

AUTOMATIC SPEED CONTROL CIRCUIT

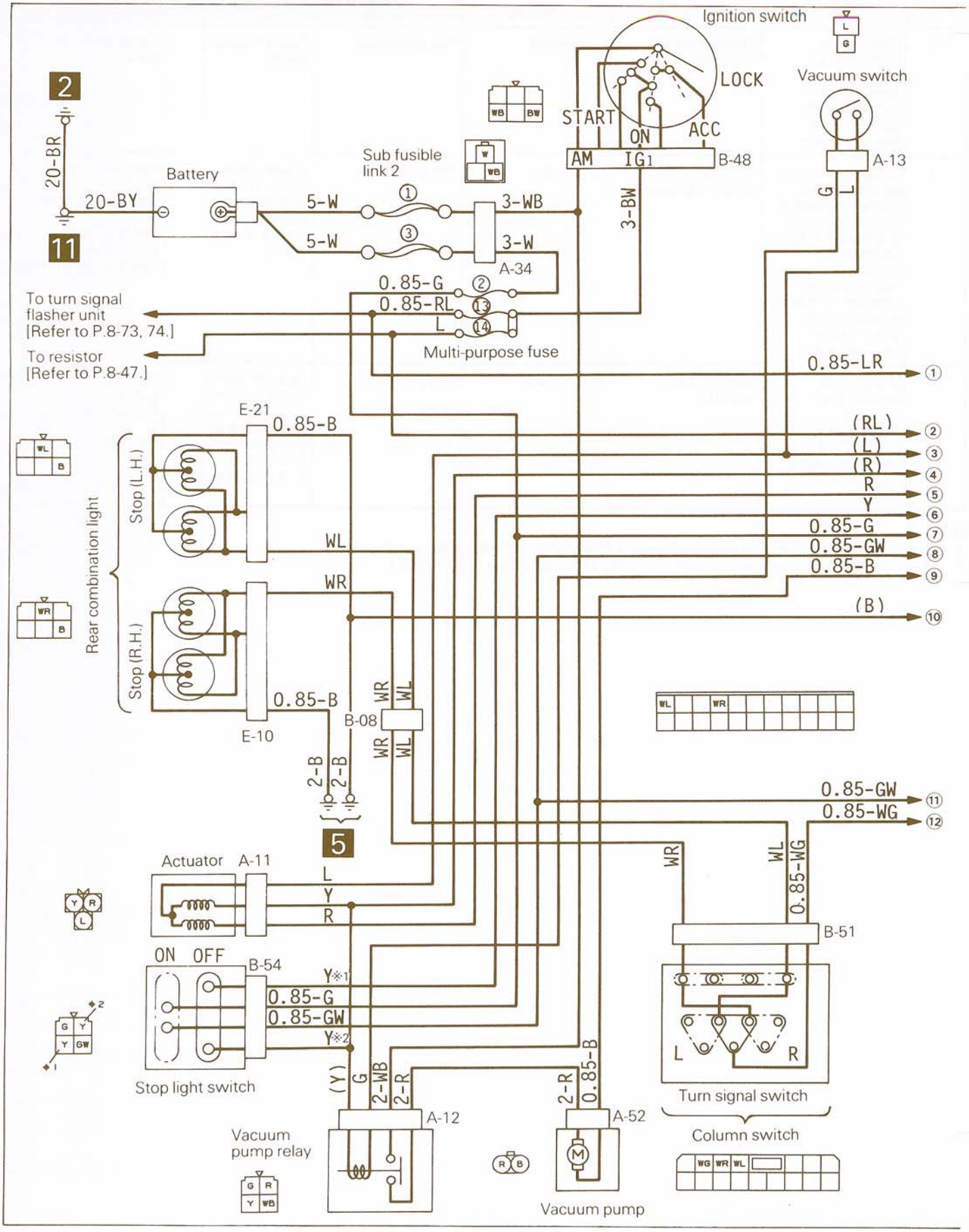

STB Revision

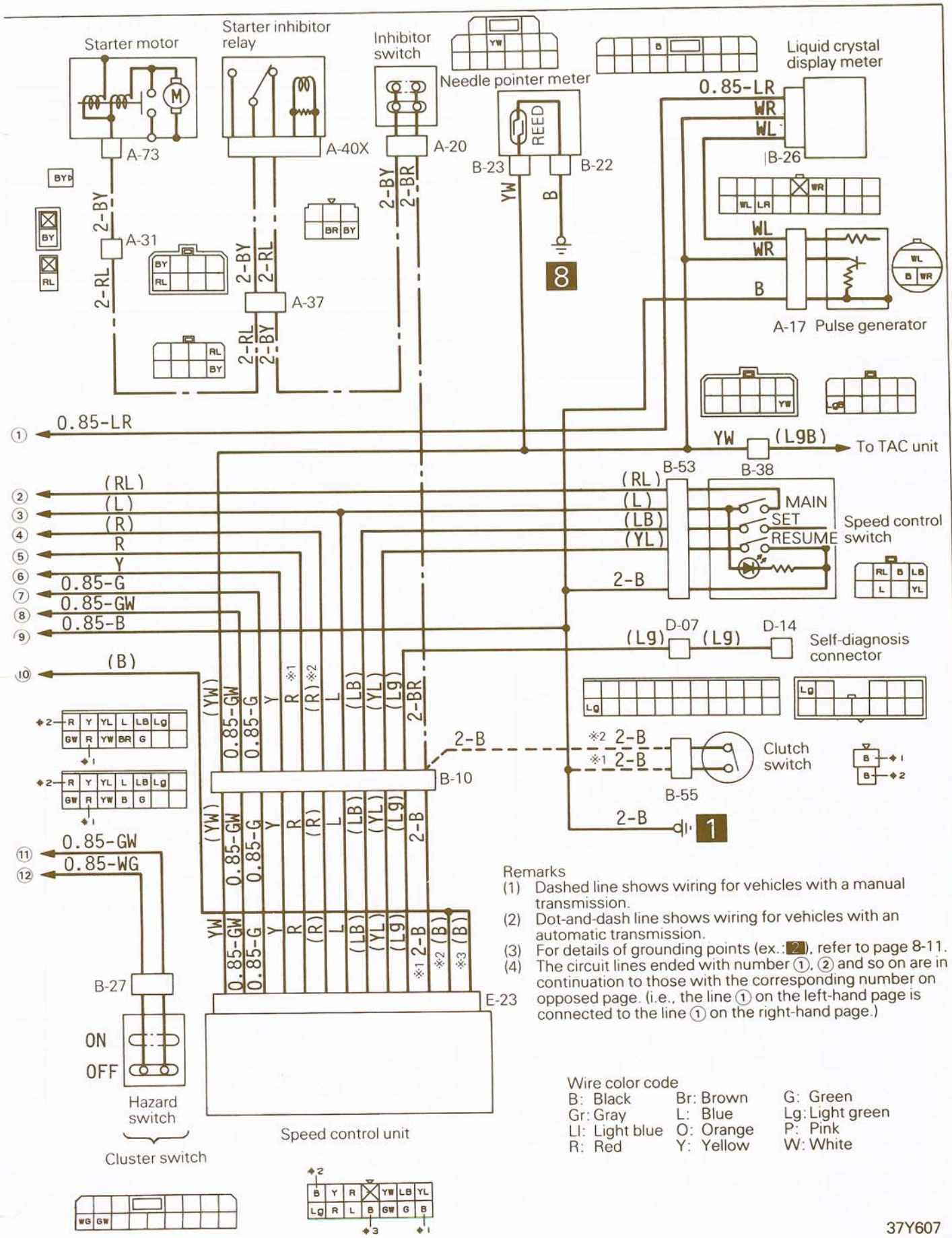

Remarks
(1) Dashed line shows wiring for vehicles with a manual transmission.
(2) Dot-and-dash line shows wiring for vehicles with an automatic transmission.
(3) For details of grounding points (ex.: 2), refer to page 8-11.
(4) The circuit lines ended with number ①, ② and so on are in continuation to those with the corresponding number on opposed page. (i.e., the line ① on the left-hand page is connected to the line ① on the right-hand page.)

Wire color code

B: Black	Br: Brown	G: Green
Gr: Gray	L: Blue	Lg: Light green
Ll: Light blue	O: Orange	P: Pink
R: Red	Y: Yellow	W: White

37Y607

AUTOMATIC SPEED CONTROL SYSTEM – CONTROL SECTION PARTS LAYOUT N14ED-A

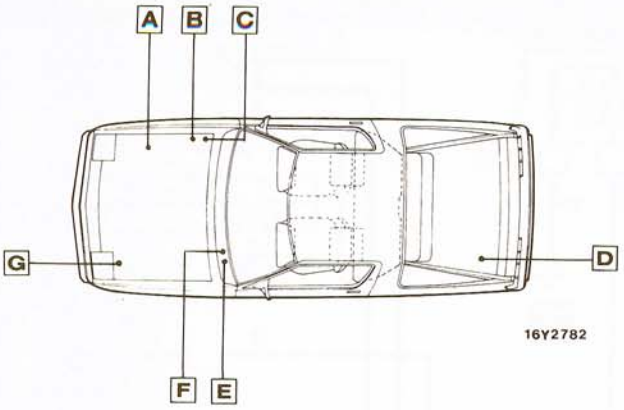

Control section parts list

Part name	Symbol
Actuator	A
Brake switch	F
Clutch switch	E
Electronic control unit (ECU)	D
Vacuum pump	G
Vacuum pump relay	B
Vacuum switch	C

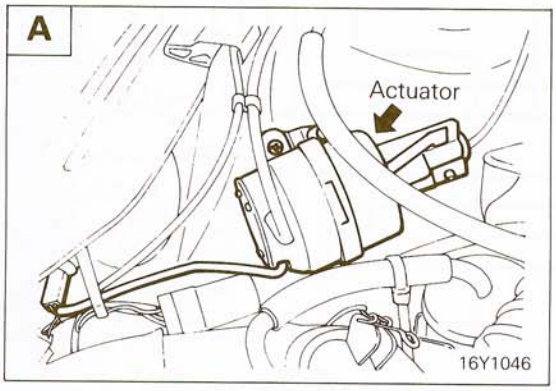

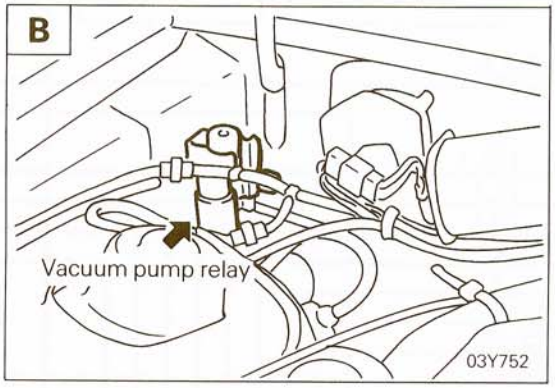

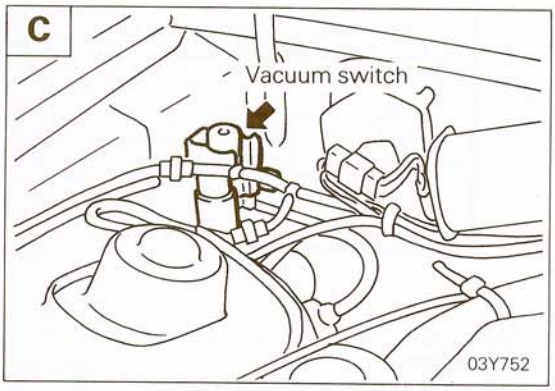

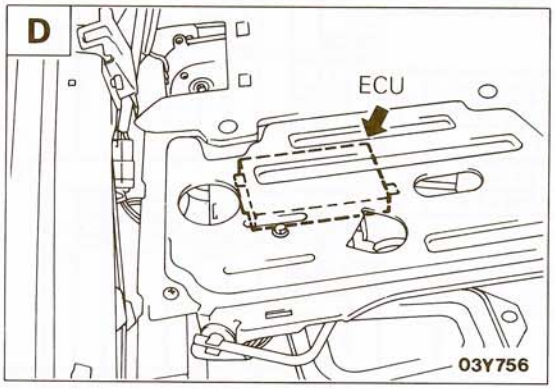

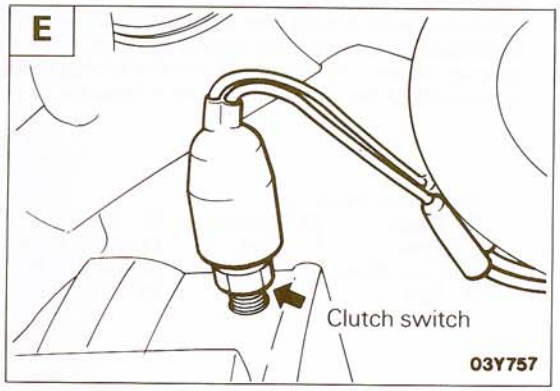

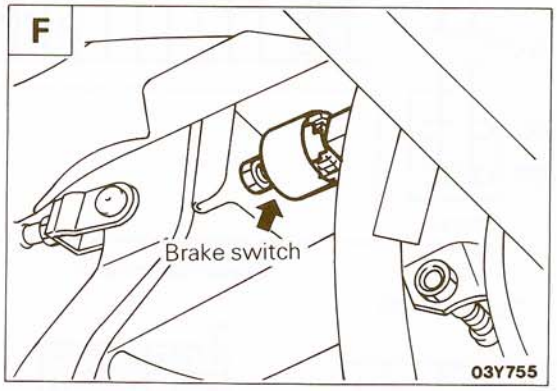

STB Revision

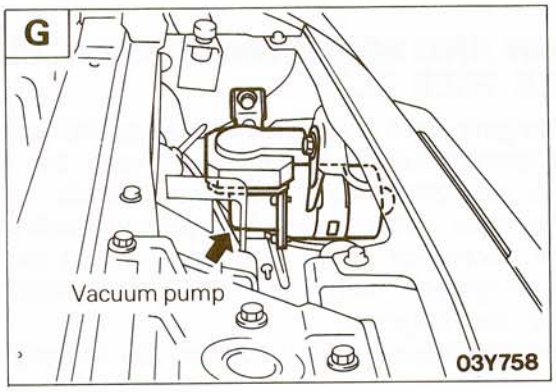
G
Vacuum pump
03Y758

SERVICE ADJUSTMENT PROCEDURES

N14FBBB

INSPECTION AND ADJUSTMENT OF ACCELERATOR CABLE FREE PLAY

(1) Run the engine until it reaches the specified idle speed.
(2) Turn the ignition switch to "OFF" to stop the engine.
(3) Check the accelerator cable for sharp bends.
(4) Check the inner cable that it has proper slackness.
(5) If there is excessive or no slackness, adjust as follows.
  ① Turn the ignition switch to "ON" for 15 seconds. (Do not run the engine.)
  ② Loosen the adjusting nut so that the throttle lever is free.
  ③ Turn the accelerator adjusting nut to the point where the throttle lever just starts moving, then back off 1/2 turn and secure the lock nut.

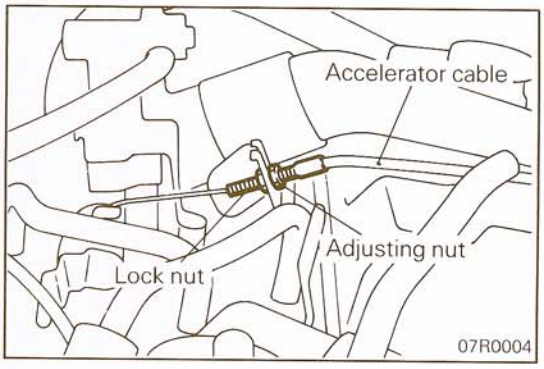

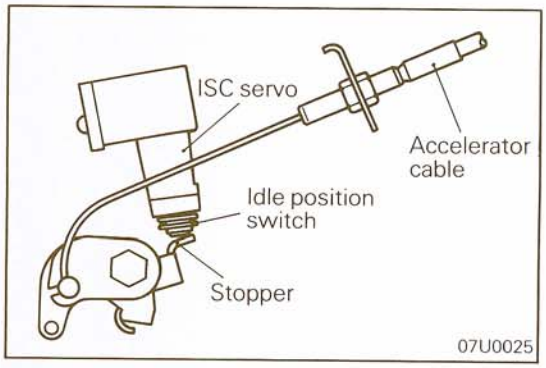

(6) Confirm that the idle position switch touches to the stopper after the idle speed control adjustment.

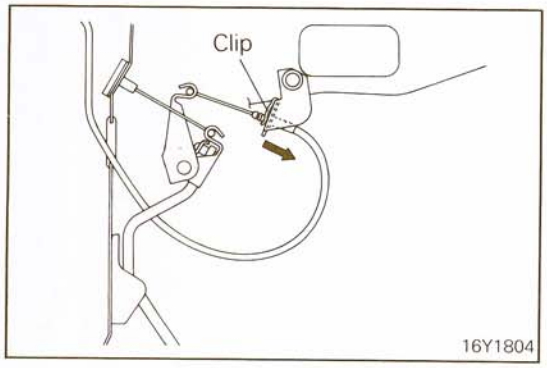

ADJUSTMENT OF SPEED CONTROL CABLE N14FAAA

(1) Adjust the play of accelerator cable.
(2) Slide the speed control cable in the direction of the arrow up to a point just before the accelerator pedal begins to move, and secure the speed control cable by inserting a clip.
(3) Check to ensure that the play of speed control cable is up to standard value.

Standard value: 0 – 3 mm (0 – 0.1 in.)

NOTE
If the play adjustment is incorrect, either an increase of idle speed or lack of speed control in the high speed range will result.

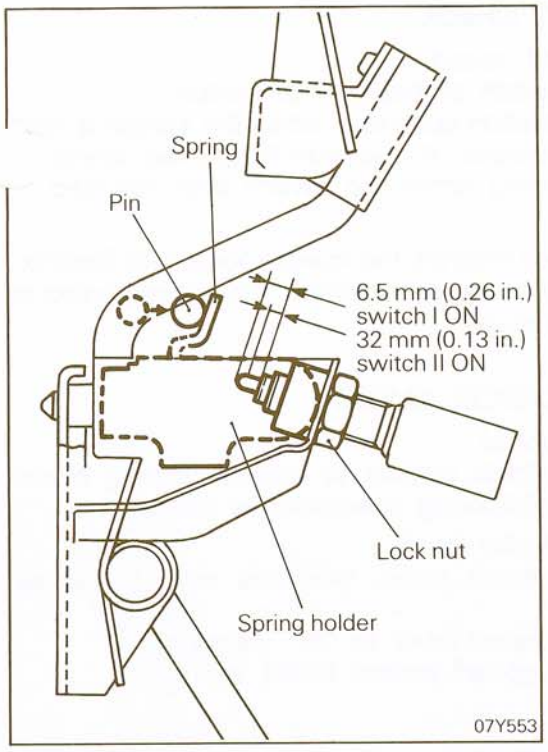

ADJUSTMENT OF KICKDOWN SWITCH

(1) Loosen the lock nut.
(2) Turn the kickdown switch to adjust it so that when pedal stroke is between 36 and 38 mm (1.4 and 1.5 in.), switch I is ON and when pedal stroke is between 45 and 49 mm (1.8 and 1.9 in.), switch II is ON.

NOTE
Make sure that overall pedal stroke is 57 mm (2.2 in.) or more.

(3) After adjustment of kickdown switch, move the spring holder to make adjustment so that as soon as the switch I of kickdown switch is ON, the pin of accelerator arm may contact the spring.

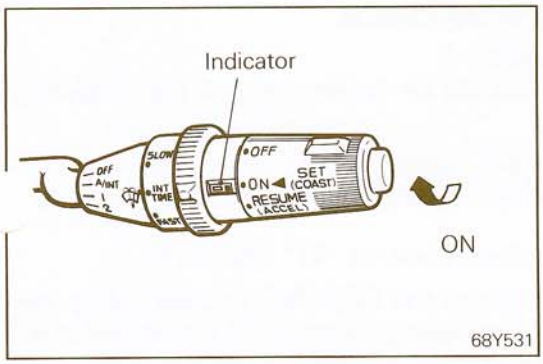

SPEED CONTROL SYSTEM CHECK

MAIN SWITCH CHECK

1. Turn the ignition key to ON.
2. Check that the indicator lights when the MAIN switch is set to ON.

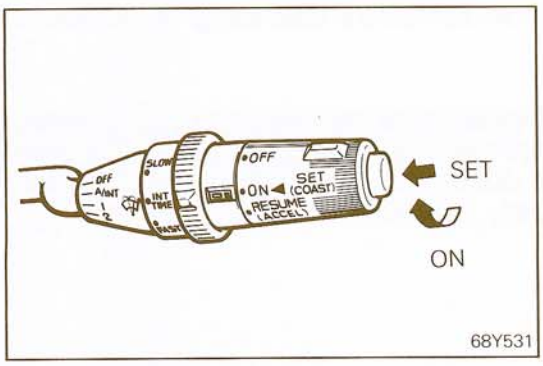

SPEED CONTROL SET CHECK

1. Set the MAIN switch to ON.
2. Run the vehicle at a desired speed over approximately 40 km/h (25 mph).
3. Press the SET switch of the control switch.
4. Check that the vehicle runs constantly at the desired speed when the switch is released.

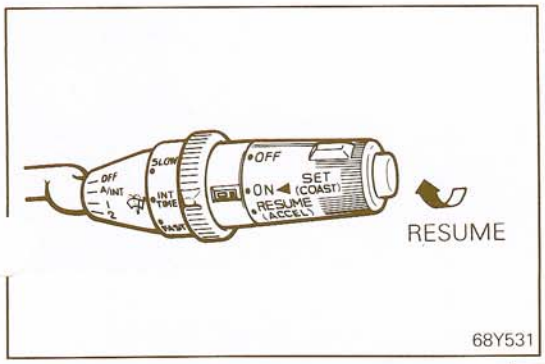

ACCELERATION SET CHECK

1. Set to the desired speed.
2. Turn the control switch to the RESUME position.
3. Check that acceleration continues while the switch is in the RESUME position and after release, the vehicle keeps the speed at which it was running when the switch was released.

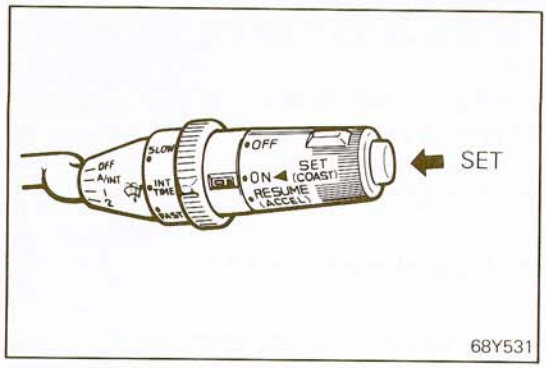

DECELERATION SET CHECK

1. Set at the desired speed.
2. Press the SET switch of the control switch.
3. Check that deceleration continues while the switch is held down and after release, the vehicle keeps the speed which it was running when the switch was released.

NOTE
If the vehicle speed reaches the lower speed limit [approx. 40 km/h (25 mph)] during deceleration, the speed control is cancelled automatically.

SPEED CONTROL CANCEL CHECK

1. Set the speed control.
2. Check that the vehicle returns to normal running mode when any of the following operations is made.
   (1) Depress the brake pedal.
   (2) Depress the clutch pedal. (Vehicles with a manual transmission)
   (3) Set the gear select lever to "N" (Neutral).
   (4) Turn OFF the speed control MAIN switch.

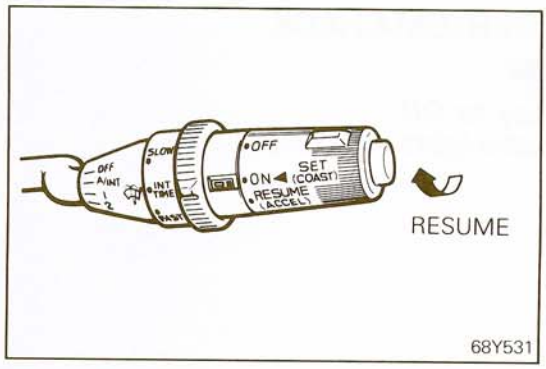

SET SPEED RESUMPTION CHECK

1. Set the speed control.
2. Cancel the speed control by making any of the following operation.
   (1) Depress the brake pedal.
   (2) Depress the clutch pedal. (Vehicles with a manu transmission)
   (3) Set the gear select lever to "N" (Neutral).
3. Turn the control switch to the RESUME position while the vehicle speed is approximately 40 km/h (25 mph) or higher.
4. Turn the control switch to check that the vehicle runs again at the speed that was set before cancelling of the speed control.

NOTE
When the vehicle speed once recovers to the set speed less about 10 km/h (6 mph) and then drops again more than 20 km/h (12 mph) during the RESUME mode, the ASC mode is automatically cancelled.

INSPECTION

N14TCAC

CHECKING CIRCUIT AND INDIVIDUAL PARTS

INSPECTION OF SPEED CONTROL SWITCH

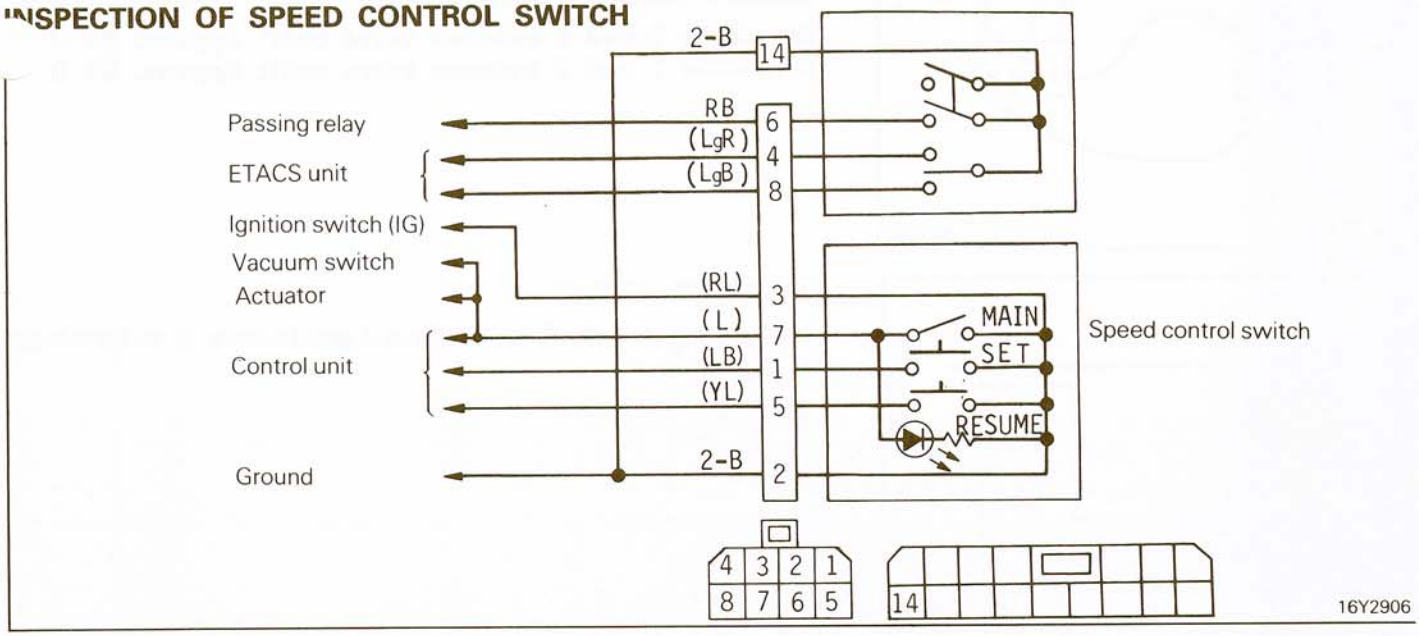

INSPECTION OF HARNESS

Disconnect the column switch connectors and check at the vehicle body side connector.

Terminal	Destination	Measuring item	Tester connection	Check conditions	Standard
3	Ignition switch (IG)	Voltage	3 – Ground	Ignition switch: OFF → ON	0 V → Battery voltage
2	Ground	Continuity	2 – Ground	Normal	With continuity

INSPECTION OF SWITCHES

Disconnect the column switch connectors and check at the switch side connector.

No.	Check item	Measuring item	Tester connection	Check conditions	Standard
1	MAIN switch	Continuity	3 – 7	MAIN switch OFF	Without continuity
				MAIN switch ON	With continuity
2	Indication light	Continuity	7 – 2 (→|)*	Normal	With continuity
		Continuity	7 – 2 (|←)*	Normal	Without continuity
3	SET switch	Continuity	1 – 2	SET switch OFF	Without continuity
				SET switch ON	With continuity
4	RESUME switch	Continuity	5 – 2	RESUME switch OFF	Without continuity
				RESUME switch ON	With continuity

NOTE

Replace the switch if out of specification.
An asterisk (*) denotes tester polarity. To check for light (LED) open or short circuit, apply the circuit tester probes in such a manner that the current will flow in the forward direction of the diode symbol.

STB Revision

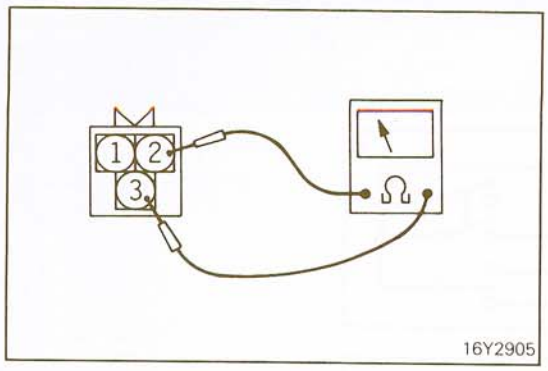

INSPECTION OF ACTUATOR

RESISTANCE CHECK

Measure resistance of each coil.

Terminals 1 and 2 (control valve coil): Approx. 30 Ω
Terminals 1 and 3 (release valve coil): Approx. 60 Ω

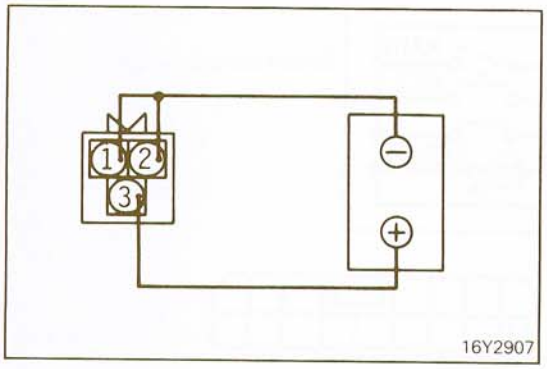

OPERATION CHECK

(1) Connect battery ⊕ to terminal 3 and battery ⊖ to terminals 1 and 2.

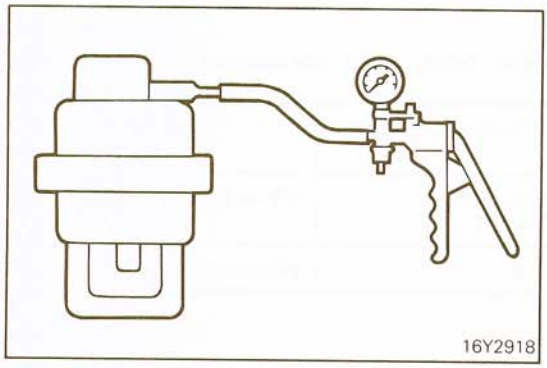

(2) Use vacuum pump to apply vacuum to the vacuum port of the actuator and check that the accelerator cable is smoothly drawn in and held at drawn-in position.

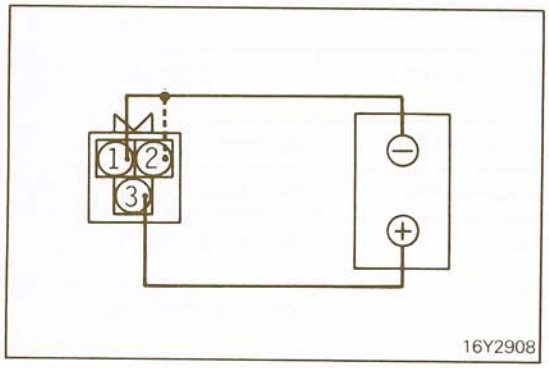

(3) Disconnect battery ⊖ for terminal 2 in the state of (2) above and check that the accelerator cable connecting point smoothly moves back to the initial position.

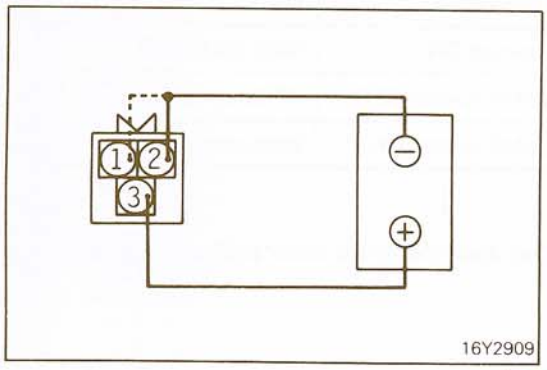

(4) Repeat steps (1) and (2) above to check that the accelerator cable connecting point smoothly moves back to the initial position when battery ⊖ is disconnected from terminal 1.

STB Revision

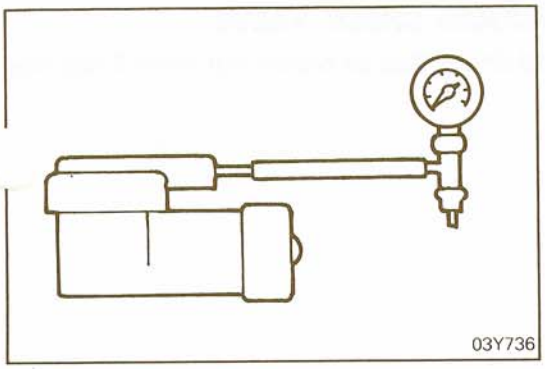

INSPECTION OF VACUUM PUMP

(1) Connect a vacuum gauge to the vacuum pump.

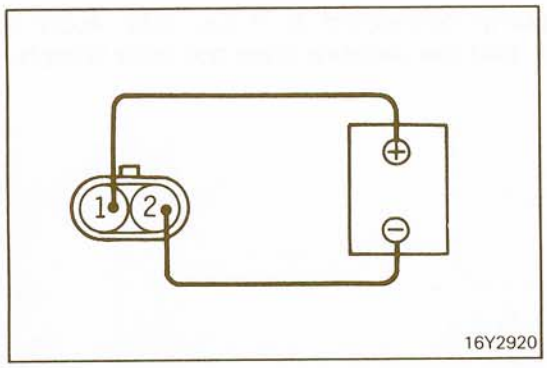

(2) Connect battery ⊕ to terminal 1 and battery ⊖ to terminal 2 and operate the vacuum pump to check that a vacuum of 150 mmHg (5.9 in.Hg) or higher is generated.
(3) After releasing the vacuum, reconnect the battery and generate a vacuum of 200 mmHg (7.9 in.Hg). Then disconnect the battery.
(4) In 2 minutes, check that vacuum is held at 150 mmHg (5.9 in.Hg) or higher.

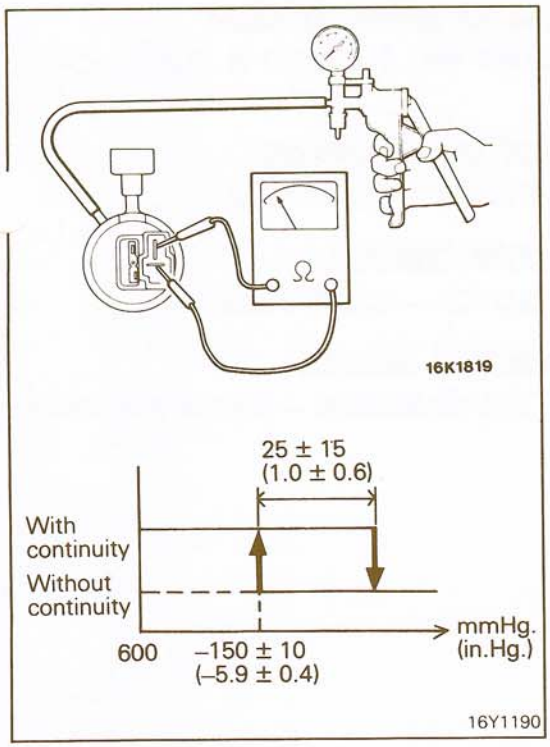

INSPECTION OF VACUUM SWITCH

Connect a vacuum pump to the vacuum port of the vacuum switch and apply a vacuum to check for continuity between switch terminals.

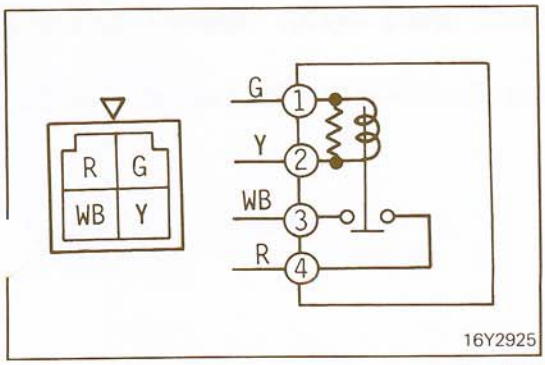

INSPECTION OF VACUUM PUMP RELAY

Check the continuity between terminals when relay coil is energized and when not.

Not energized	Between terminals ① and ②	Approx. 70 Ω
	Between terminals ③ and ④	No continuity (∞ Ω)
Power is applied between terminals ① and ②	Between terminals ③ and ④	Continuity (Approx. 0 Ω)

STB Revision

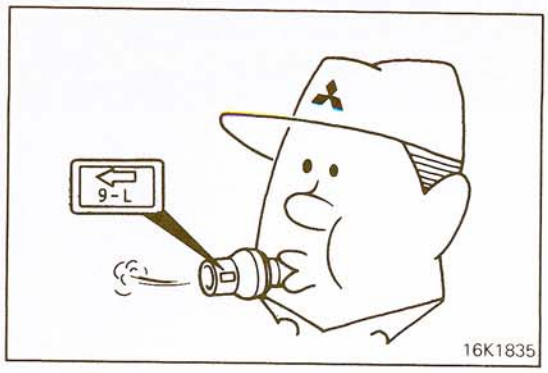

INSPECTION OF VACUUM CHECK VALVE

(1) Blow into B tap and check that air blows out from A tap side as illustrated.

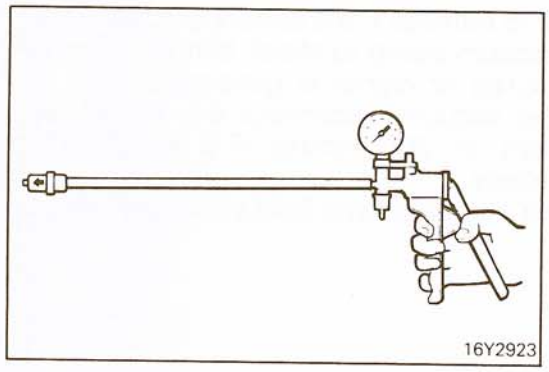

(2) With a vacuum pump connected at B tap side, apply a vacuum and check that the vacuum does not drop sharply.

INSPECTION OF VEHICLE SPEED SENSOR

Refer to Service Manual Vol. 2 GROUP 8 ELECTRICAL – Meters and Gauges.

INSPECTION OF STOP LIGHT SWITCH

Refer to GROUP 5 BRAKES – Brake Pedal.

INSPECTION OF CLUTCH SWITCH

Refer to GROUP 6 CLUTCH – Clutch Pedal.

INSPECTION OF INHIBITOR SWITCH

Refer to GROUP 21 TRANSMISSION – Service Adjustment Procedures.

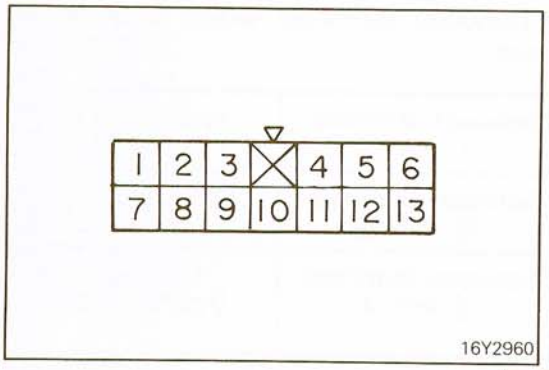

ELECTRONIC CONTROL UNIT (ECU) SIGNAL CIRCUIT CHECK

With the ECU connector disconnected, check at the body side connector.

STB Revision

Terminal No.	Destination of part to be measured	Measurement item	Tester connection ⊕ side	Tester connection ⊖ side	Measuring condition	Standard
1	RESUME switch	Resistance	1	Ground	Steady state	Without continuity
					RESUME switch ON	With continuity (100 Ω or less)
2	SET switch	Resistance	2	Ground	Steady state	Without continuity
					SET switch ON	With continuity (100 Ω or less)
3	Vehicle speed sensor	Resistance	3	Ground	Vehicle running at speed of 1 km/h or less	To alternate between continuity (100 Ω or less) and discontinuity
4	Control solenoid	Resistance	11	4	Steady state	Approx. 30 Ω
5	Release solenoid	Resistance	11	5	Steady state	Approx. 60 Ω (vacuum switch connector disconnected)
6	Selection port	Resistance	6	Ground	Steady state	With continuity (100 Ω or less)
7*1	Clutch switch	Resistance	7	Ground	Steady state	Without continuity
					Clutch switch ON	With continuity (100 Ω or less)
7*2	Inhibitor switch	Resistance	7	Ground	Steady state	Without continuity
					Inhibitor switch	With continuity (100 Ω or less)
8	Stop light circuit fuse	Voltage	8	Ground	Steady state	Equivalent to battery voltage
9	Stop light switch	Voltage	9	Ground	Steady state	0 V
					Brake ON	Equivalent to battery voltage
10	Ground	Resistance	10	Ground	Steady state	With continuity
11	ECU power	Voltage	11	Ground	Ignition switch ON MAIN switch OFF	0 V
					Ignition switch ON MAIN switch ON	Equivalent to battery voltage
12	Stop light switch	Resistance	12	5	Steady state	With continuity
					Brake ON	Without continuity
		Voltage	12	Ground	Ignition switch ON MAIN switch ON	Equivalent to battery voltage
13*3	Self-diagnosis	–	–		–	–

NOTE
*1 Vehicles with a manual transmission
*2 Vehicles with an automatic transmission
*3 Terminal No. 13 is okay if the self-diagnosis code can be confirmed when the ignition switch and MAIN switch are turned on, with the ECU harness connector as connected. (Refer to P.14-105.)

ENGINE CONTROL

N140A- -

REMOVAL AND INSTALLATION

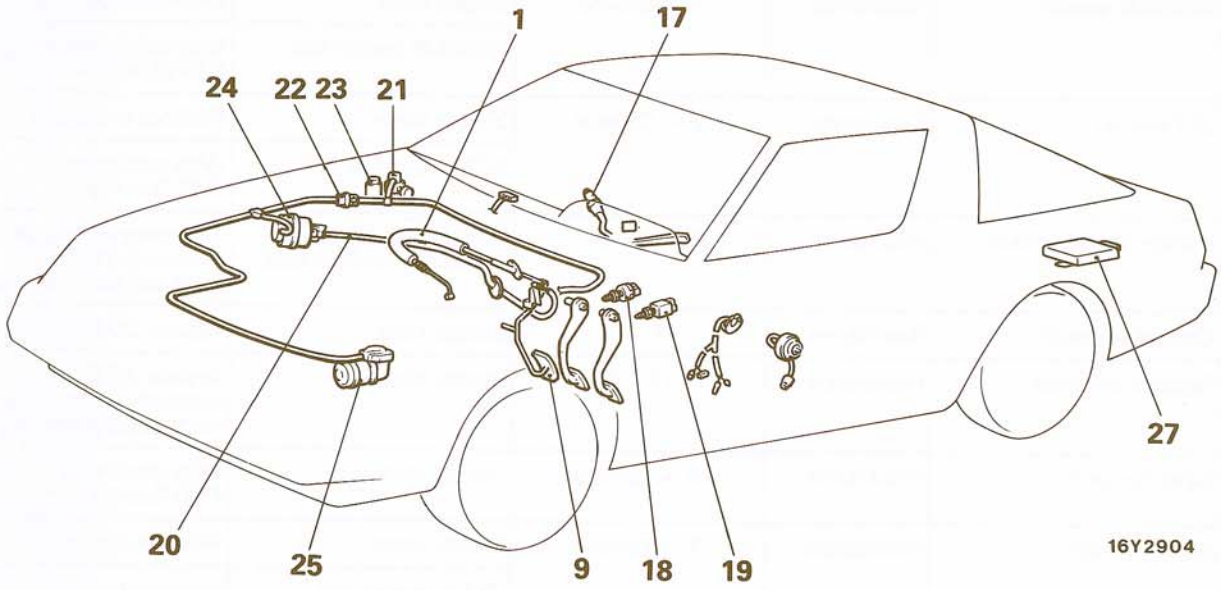

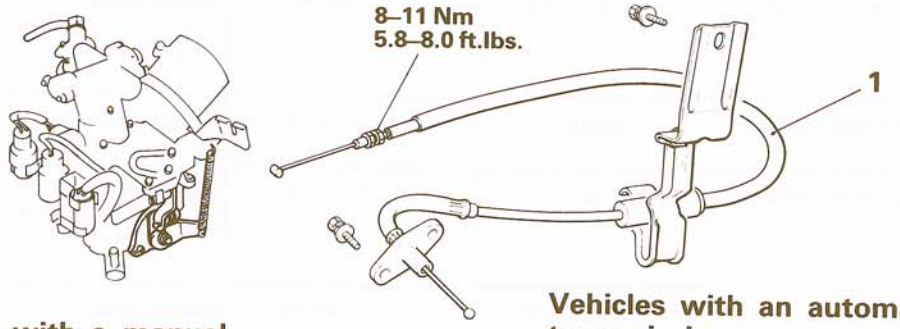

Vehicles with a manual transmission

Vehicles with an automatic transmission

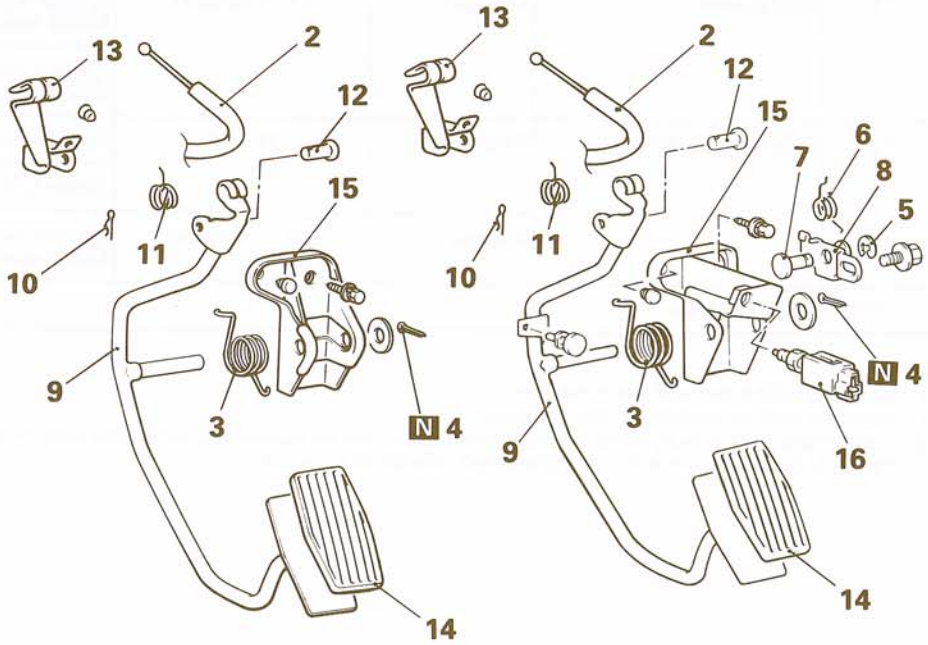

1. Accelerator cable
2. Speed control cable connection
- ◆◆ 3. Return spring
4. Cotter pin
5. Snap ring
- ◆◆ 6. Spring
- ◆◆ 7. Clevis pin
8. Spring holder
9. Accelerator arm
10. Cotter pin
- ◆◆ 11. Spring
- ◆◆ 12. Clevis pin
13. Lever
14. Pedal pad
- ◆◆ 15. Accelerator arm bracket
16. Kickdown switch

NOTE
(1) ◆◆: Refer to "Service Points of Installation"
(2) N: Non-reusable parts

03Y759

STB Revision

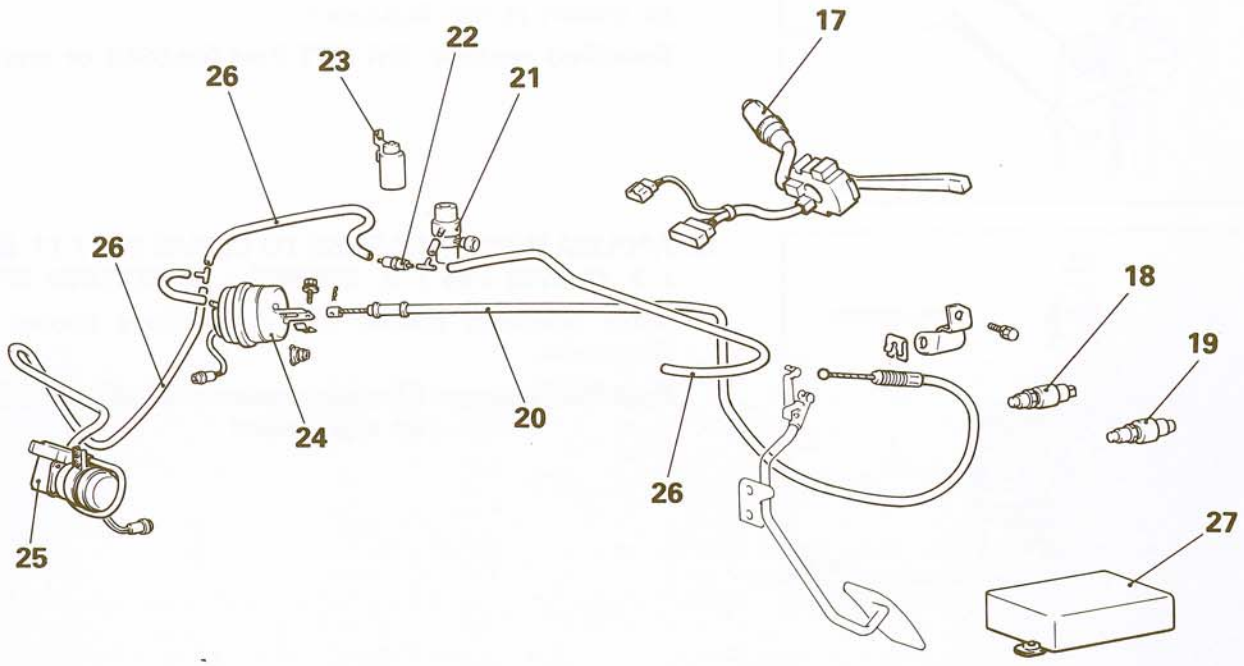

16Y1855

17. Speed control switch
18. Brake switch
19. Clutch switch
20. Speed control cable
21. Vacuum switch
22. Vacuum check valve
23. Vacuum pump relay
24. Actuator
25. Vacuum pump
26. Vacuum hose
27. Electronic control unit (ECU)

Post-installation Operation
- Adjustment of Accelerator Cable Free Play (Refer to P.14-134.)
- Adjustment of Speed Control Cable Play (Refer to P.14-134.)
- Inspection of Speed Control System (Refer to P.14-135.)
- Adjustment of Kickdown Switch (Refer to GROUP 21 TRANSMISSION – MANUAL AND AUTOMATIC – On-vehicle Service.)

INSPECTION

N14OCAD

- Check the inner and outer cables for damage.
- Check the cable for smooth movement.
- Check the accelerator arm for bending.
- Check the return spring for weakness.
- Check the kickdown switch for operation. (Refer to GROUP 21 TRANSMISSION – On-vehicle Service.)

STB Revision

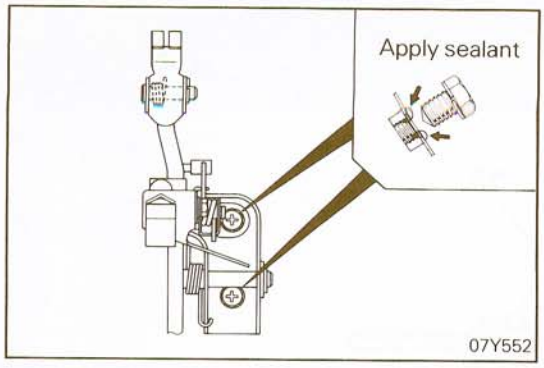

SERVICE POINTS OF INSTALLATION

N14ODAK

15. APPLICATION OF SEALANT TO ACCELERATOR ARM BRACKET

Apply specified sealant to accelerator arm bracket bolt ho as shown in the illustration.

Specified sealant: 3M ART Part No.8659 or equivalent

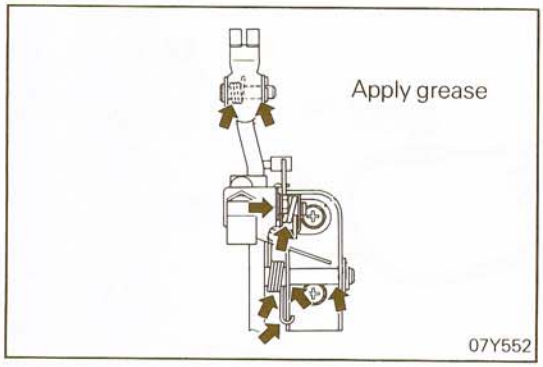

12. APPLICATION OF GREASE TO CLEVIS PIN / 11. SPRING / 7. CLEVIS PIN / 6. SPRING / 3. RETURN SPRING

Apply specified grease to the positions shown in the illustration.

Specified grease: Chassis grease SAE J310, NLGI No. 0 or equivalent

STB Revision

PROPELLER SHAFT AND UNIVERSAL JOINTS

CONTENTS

GENERAL INFORMATION **2**

PROPELLER SHAFT **4**

SPECIAL TOOL **3**

SPECIFICATIONS **2**

General Specifications 2

Lubricants 2

Service Specifications 2

Torque Specifications 2

TROUBLESHOOTING **3**

Noise and Vibration at High Speed

Noise at Start

GENERAL INFORMATION

N16BAAC

The propeller shaft is of two-joint type and the universal joint bearings are lubrication-free.

SPECIFICATIONS

N16CA--

GENERAL SPECIFICATIONS

Items	Specifications
Propeller shaft	
Type	Two-joint type
Length x O.D.	
Vehicles with a manual transmission mm (in.)	722 x 75 (28.4 x 2.9)
Vehicles with an automatic transmission mm (in.)	538 x 75 (21.2 x 2.9)
Universal joint	
Type	Cross type
Bearing	Lubrication-free needle roller bearing
Journal O.D. mm (in.)	14.7 (0.58)

SERVICE SPECIFICATIONS

N16CB--

Items	Specifications
Standard value	
Journal end play mm (in.)	0.06 (0.0024)
Limit	
Propeller shaft runout (Dial indicator reading) mm (in.)	0.6 (0.024)

TORQUE SPECIFICATIONS

N16CC--

Items	Nm	ft.lbs.
Flange yoke attaching bolts	50 – 60	36 – 43

LUBRICANTS

N16CD--

Items	Specified lubricant	Quantity
Universal joint	Multipurpose grease SAE J310, NLGI No. 2	As required
Sleeve yoke surface	Hypoid gear oil SAE 80, 75W–85W conforming to API GL-4	As required

STB Revision

SPECIAL TOOL

N16DA- -

Tool (Number and name)	Use
ıB990840-01 Universal joint remover/ installer 	Removal and installation of journal bearing

TROUBLESHOOTING

N16EAAB

Symptom	Probable cause	Remedy	Reference page
Noise at start	Worn journal bearing Worn sleeve yoke spline	Replace	16-6
	Loose propeller shaft installation	Retighten	16-5
Noise and vibration at high speed	Unbalanced propeller shaft	Replace	16-5
	Improper snap ring selection	Adjust the clearance	16-6
	Worn journal bearing	Replace	16-6

PROPELLER SHAFT

N16GA--

REMOVAL AND INSTALLATION

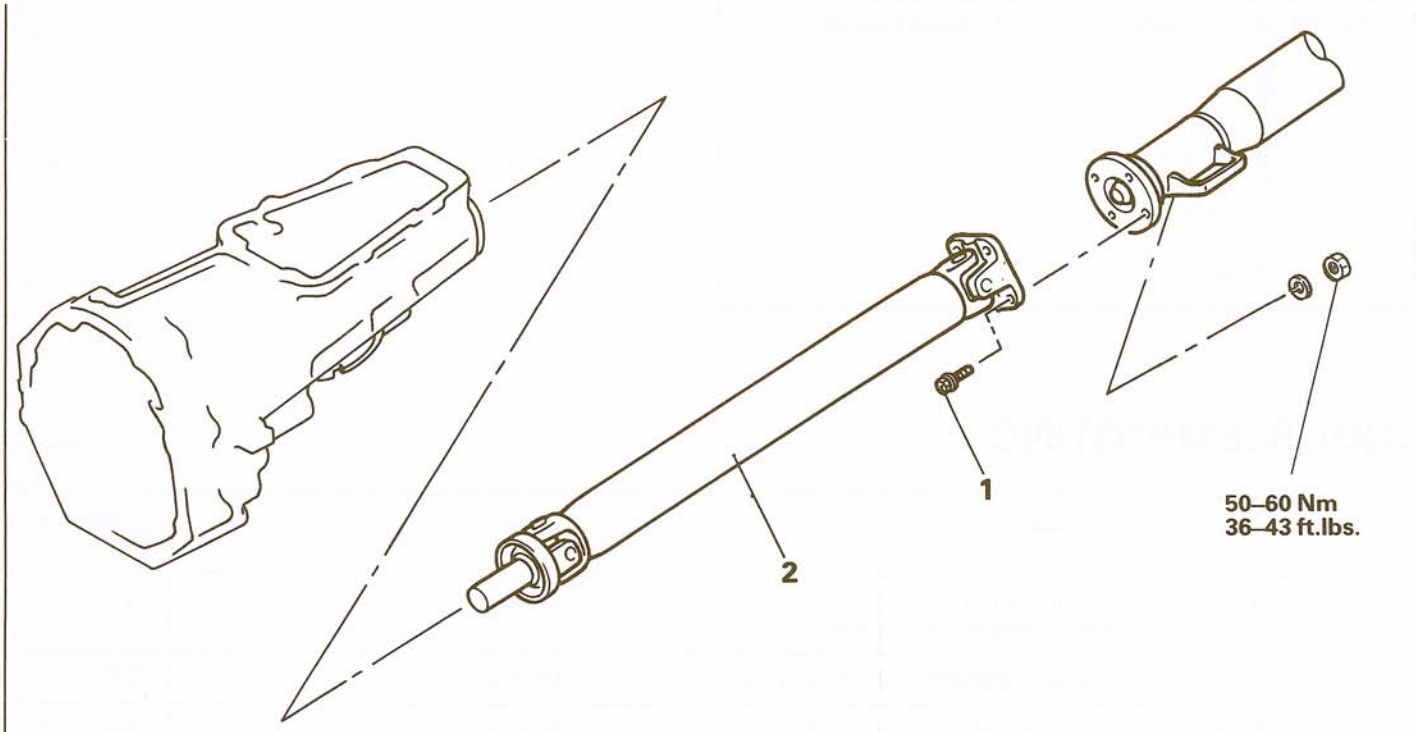

Removal steps

1. Flange yoke attaching bolt
2. Propeller shaft

NOTE
(1) Reverse the removal procedures to reinstall.
(2) ◆◆: Refer to "Service Points of Removal".
(3) ◆◆: Refer to "Service Points of Installation".

10Y637

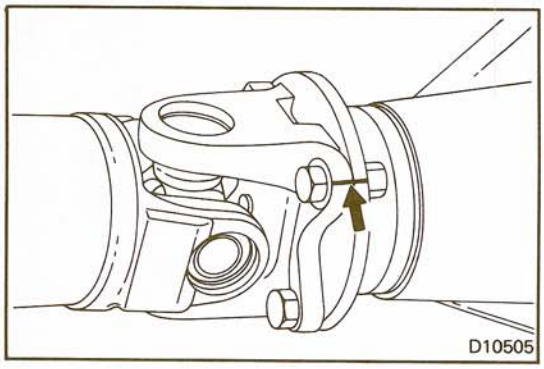

SERVICE POINT OF REMOVAL

N16GBAC

2. REMOVAL OF PROPELLER SHAFT

Make the mating marks on the flange yoke and the differential companion flange.

Caution
Use care not to damage the lip of transmission oil seal.
Do not allow foreign matter to enter the transmission.

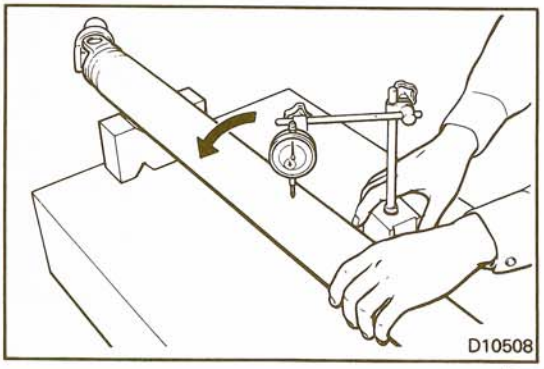

INSPECTION

N16GCAC

PROPELLER SHAFT RUNOUT

Measure the propeller shaft runout.
If the runout exceeds the limit, replace the propeller shaft.

Limit: 0.6 mm (0.024 in.)

- Wear and damage on splines of flange/sleeve yoke
- Cracks of propeller shaft yoke

STB Revision

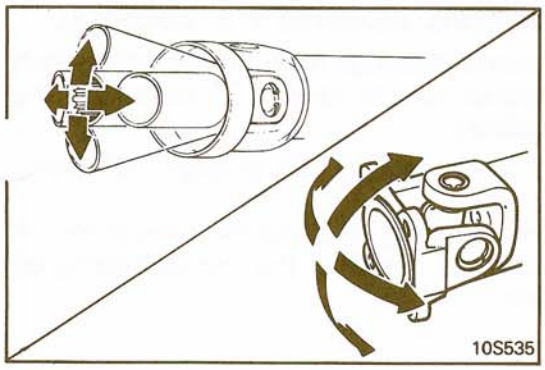

- Smooth operation of universal joints.

SERVICE POINT OF INSTALLATION N16GDAE

2. INSTALLATION OF PROPELLER SHAFT

Clean the external periphery of the sleeve yoke and apply specified transmission gear oil to the sleeve yoke.

Specified transmission oil: Hypoid gear oil SAE 80, 75W–85W conforming to API GL-4: as required

PROPELLER SHAFT N16GE- -

DISASSEMBLY AND REASSEMBLY

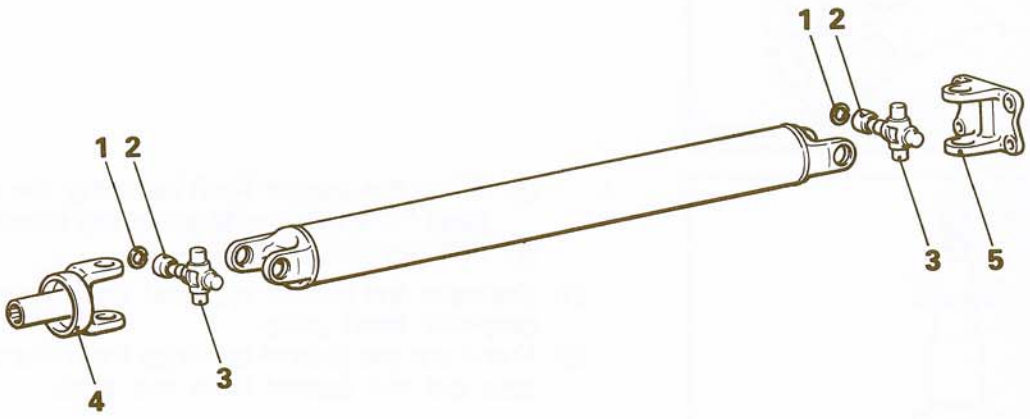

Disassembly steps

◆◆ ▶◀ 1. Snap ring
◆◆ ▶◀ 2. Journal bearing
◆◆ ▶◀ 3. Journal
4. Sleeve yoke
5. Flange yoke

NOTE
(1) Reverse the disassembly procedures to reassemble.
(2) ◆◆: Refer to "Service Points of Disassembly".
(3) ▶◀: Refer to "Service Points of Reassembly".

10Y623

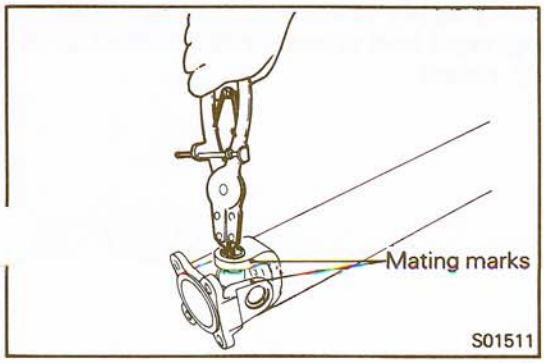

SERVICE POINTS OF DISASSEMBLY N16GFAD

1. REMOVAL OF SNAP RING

(1) Make mating marks on the yokes of the universal joint that is to be disassembled.

NOTE
When the universal joint journal and journal bearing are replaced, obtain the universal joint kit.

(2) Remove the snap rings from the yoke with snap ring pliers.

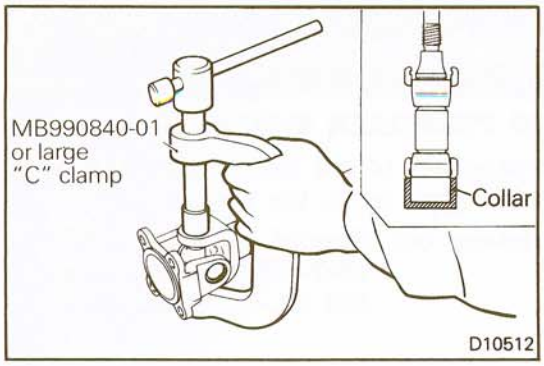

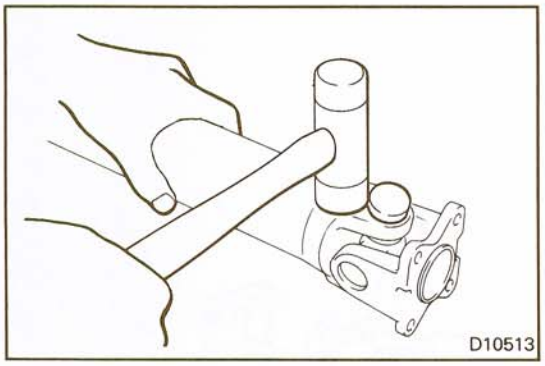

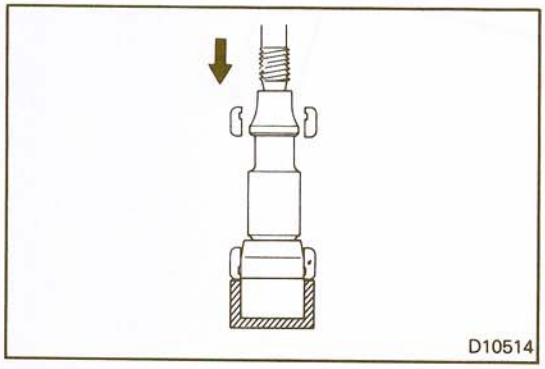

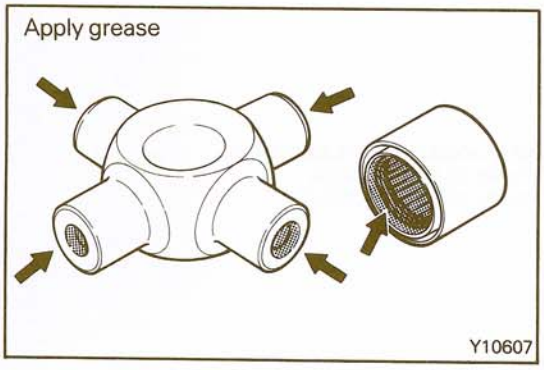

2. REMOVAL OF JOURNAL BEARING / 3. JOURNAL

(1) Force out the journal bearings from the propeller shaft yoke with a special tool or large "C" clamp by the following procedures:

① Install collar to the special tool or large "C" clamp, proper.

② Press a journal bearing by using the special tool or large "C" clamp to force out the journal bearing on opposite side.

③ Pull out the journal bearing from the yoke.

NOTE
If the journal bearing is hard to remove, strike the yoke with a plastic hammer.

④ Press the journal shaft by using the special tool or large "C" clamp to force out the remaining bearings.

⑤ Pull out the journal.

(2) Separate the journal together with the yoke from the propeller shaft yoke.

(3) Force out the journal bearings from the yoke and the take out the journal from the yoke.

SERVICE POINTS OF REASSEMBLY N16GHAE

3. INSTALLATION OF JOURNAL / 2. JOURNAL BEARING

(1) Apply specified grease to the following parts of universal joint kit:

① Shafts and grease sumps of journal

② Dust seal lips

③ Needle roller of bearings

Specified grease: Multipurpose grease SAE J310, NLGI No. 2EP

Caution
Do not excessively apply grease. Otherwise, faulty fitting of bearing caps and errors in the selection of snap rings may result.

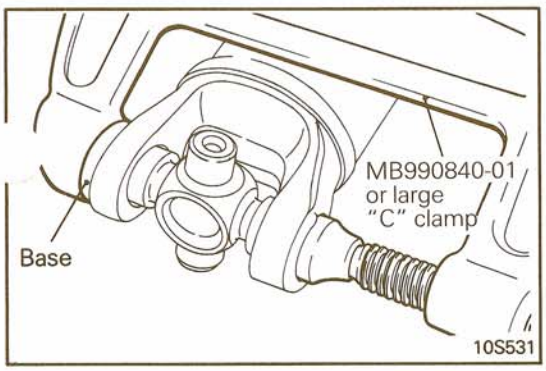

(2) Press fit the journal bearings to the yoke by using the special tool or large "C" clamp according to the following procedures:
   ① Install the base to the special tool or large "C" clamp proper.
   ② Insert both bearings in the yoke, and hold and press fit them by using the special tool or large "C" clamp. The guide of base stops the bearings at predetermined position.

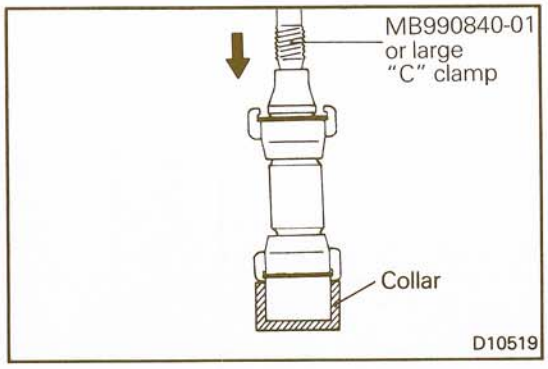

1. INSTALLATION OF SNAP RING

(1) Fit snap rings of same thickness onto both sides of yoke.
(2) Press the bearing and journal to one side by using the special tool or large "C" clamp.

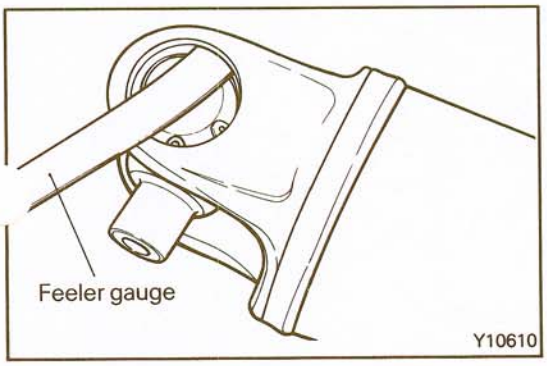

(3) Measure the clearance between the snap ring and the groove wall of yoke with a feeler gauge.
(4) If the clearance is more than the standard value, the snap rings should be replaced.
(5) If the clearance is less than the standard value, the snap rings need not be changed.

Standard value: 0.06 mm (0.0024 in.)

REAR SUSPENSION

CONTENTS

FRONT SUPPORT 19

GENERAL INFORMATION 2

LOWER CONTROL ARM 9

REAR CROSSMEMBER 21

SERVICE ADJUSTMENT PROCEDURES 6

Inspection and Adjustment of Wheel Alignment 6

SPECIAL TOOLS 5

SPECIFICATIONS 3

General Specifications 3

Lubricants 4

Sealant 4

Service Specifications 3

Torque Specifications 3

STABILIZER BAR 12

STRUT ASSEMBLY 13

SUSPENSION ASSEMBLY 7

GENERAL INFORMATION

N17BAAD

The rear suspension is a simply constructed McPherson Strut type independent suspension system with light unsprung weight.
The strut assembly is mounted, with its upper end supported by the wheel house through the insulator and lower end connected to the axle housing.
The lower control arms are connected to the front support, crossmember and axle housing through bushings.
A cam mechanism is provided between each lower control arm and the crossmember for toe-in adjustment.
The stabilizer bars with their front ends bolted to the front support at two points, are connected to the respective lower control arms.
The front support holds the torque tube and the lower control arms through upper and lower cushions and bushings, respectively. The both ends of the front support are bolted to the body with the mediate use of bushings.

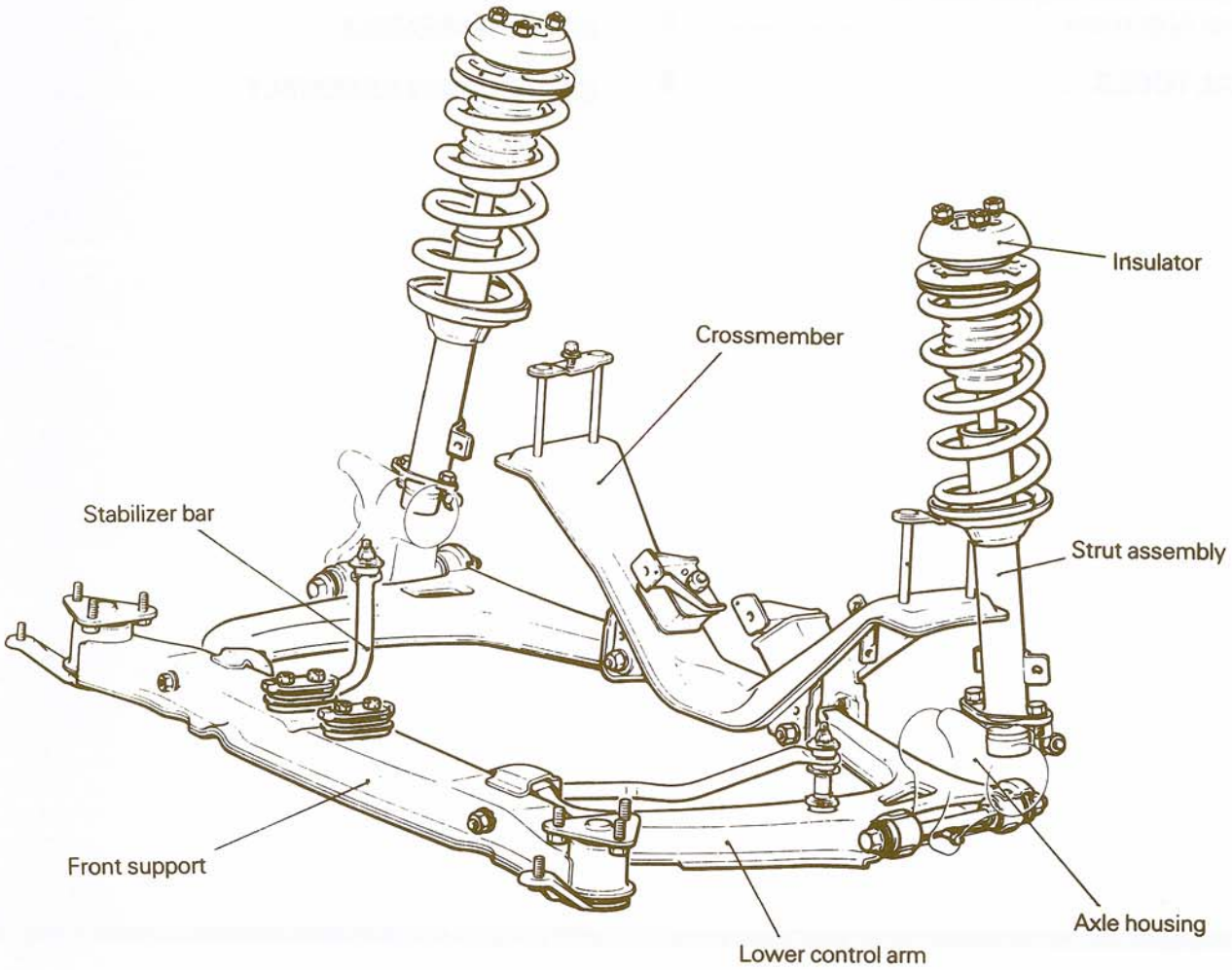

12Y679

SPECIFICATIONS

N17CA- -

GENERAL SPECIFICATIONS

ems	A187AMNSL A187AMRSL	A187AMNFGL	
Suspension system	Strut type independent suspension	Strut type independent suspension	Strut type independent suspension
Coil spring			
Wire dia. x O.D. x free length mm (in.)	12.2 x 132.2 x 327.7 (0.48 x 5.20 x 12.90)	12.2 x 132.2 x 327.7 (0.48 x 5.20 x 12.90)	12.0 x 132.0 x 320.4 (0.47 x 5.20 x 12.61)
Coil spring identification color	Pink–2	Pink–2	Pink–1
Shock absorber			
Type	Hydraulic, cylindrical, double-acting type	Hydraulic, cylindrical, double-acting type	Gas damper type
Max. length mm (in.)	542 (21.3)	542 (21.3)	542 (21.3)
Min. length mm (in.)	362 (14.3)	362 (14.3)	362 (14.3)
Stroke mm (in.)	180 (7.1)	180 (7.1)	180 (7.1)
Stabilizer bar O.D. mm (in.)	16 (0.63)	19 (0.75)	19 (0.75)

SERVICE SPECIFICATIONS

N17CE- -

Items	Specifications
Standard value	
Toe-in mm (in.)	0 ± 2 (0 ± 0.08)
Camber	0°00′
Protruding length of stabilizer bar installation bolt mm (in.)	15 – 17 (0.59 – 0.67)
Limit	
Piston rod O.D. mm (in.)	21.95 (0.8642)

TORQUE SPECIFICATIONS

N17CC- -

Items	Nm	ft.lbs.
Lower control arm to front support	130 – 150	94 – 108
Lower control arm to crossmember	130 – 150	94 – 108
Lower control arm to axle housing	70 – 80	51 – 58
Lower control arm locking pin	15 – 20	11 – 14
Strut assembly to axle housing	50 – 70	36 – 51
Strut piston rod nut	70 – 90	51 – 65
Strut assembly to body	25 – 35	18 – 25
Stabilizer bar to front support	30 – 40	22 – 29
Stabilizer bar to lower control arm	10 – 20	7 – 14
Front support lower stopper bolt to body	40 – 50	29 – 36
Front support nut to pin assembly	70 – 85	51 – 61
Pin assembly to body	70 – 85	51 – 61
Support insulator to crossmember	25 – 30	18 – 22
Support insulator to rear support	30 – 35	22 – 25
Rear support to differential carrier	50 – 70	36 – 51
Bolt assembly to body	8 – 10	6 – 7
Bolt assembly to crossmember	70 – 85	51 – 61

STB Revision

SEALANT

N17CE- -

Items	Specified sealant	Quantity
Top surface of strut insulator	3M Automotive Bedding and Glazing 8506 or equivalent	As required

LUBRICANTS

N17CD- -

Items	Specified lubricant	Quantity
Lower arm shaft	Chassis grease SAE J310, NLGI No. 0	As required

SPECIAL TOOLS

N17DA--

Tool (Number and name)	Use	Tool (Number and name)	Use
1B990848-01 Lower arm bushing arbor  MB990884-01 Lower arm bushing remover/ installer ring  MB990890-01 Bushing remover/installer ring 	Removal and pressing-in of bushing A	MB990883-01 Lower arm bushing arbor  MB990885-01 Lower arm bushing remover/ installer ring  MB990890-01 Bushing remover/installer ring 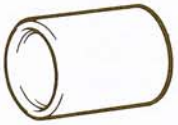	Removal and pressing-in of bushing B
MB990892-01 Lower arm bushing remover  MB990897-01 (Sub part of MB990895-01) 	Removal of bushing C	MB990895-01 Lower arm bushing installer 	Pressing-in of bushing C
MB990882-01 Upper arm bushing arbor 	Removal of bushing D	MB990987 Spring compressor 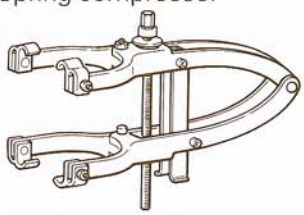	Removal and installation of the coil spring
MB990899-01 Spanner wrench 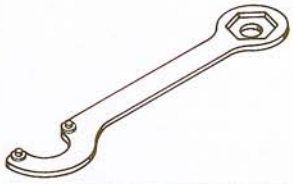	Removal and installation of the strut insulator		

SERVICE ADJUSTMENT PROCEDURES

N17FDAA

INSPECTION AND ADJUSTMENT OF WHEEL ALIGNMENT

Measure the wheel alignment with the vehicle parked on level ground.
The rear suspension and wheels should be serviced to the normal condition prior to measurement of wheel alignment.

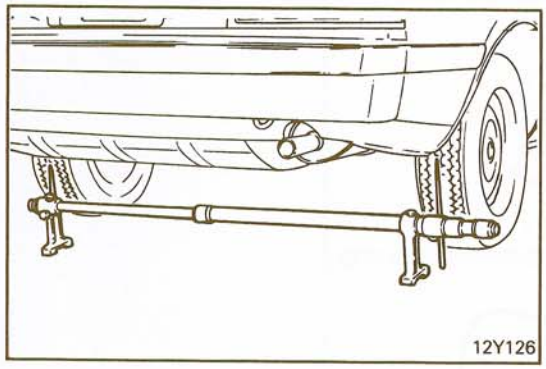
12Y126

1. TOE-IN

(1) Measure the toe-in with a toe-in gauge.
Standard value: 0 ± 2 mm (0 ± 0.08 in.)

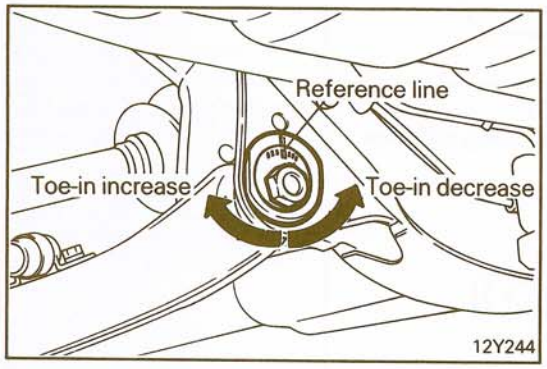

12Y244

(2) If the toe-in is not within the standard value, adjust it by moving the mounting bolts located on the crossmember side of the lower control arm.

NOTE
Make the adjustment by moving the left and right bolts equally.
Movement of one division on the scale will cause toe-. variation of about 1 mm (0.04 in.).

2. CAMBER

Measure the camber with a camber/caster/kingpin gauge. (Refer to GROUP 2 FRONT SUSPENSION – Service Adjustment Procedures.)

Standard value: 0°00′

NOTE
Camber is pre-adjusted to the specified value at the factory and therefore requires no adjustment.

SUSPENSION ASSEMBLY

N17GA- -

REMOVAL AND INSTALLATION

Pre-removal Operation
- Draining Brake Fluid

Post-installation Operation
- Pouring Brake Fluid
- Bleeding Brake Line (Refer to P.5-29.)

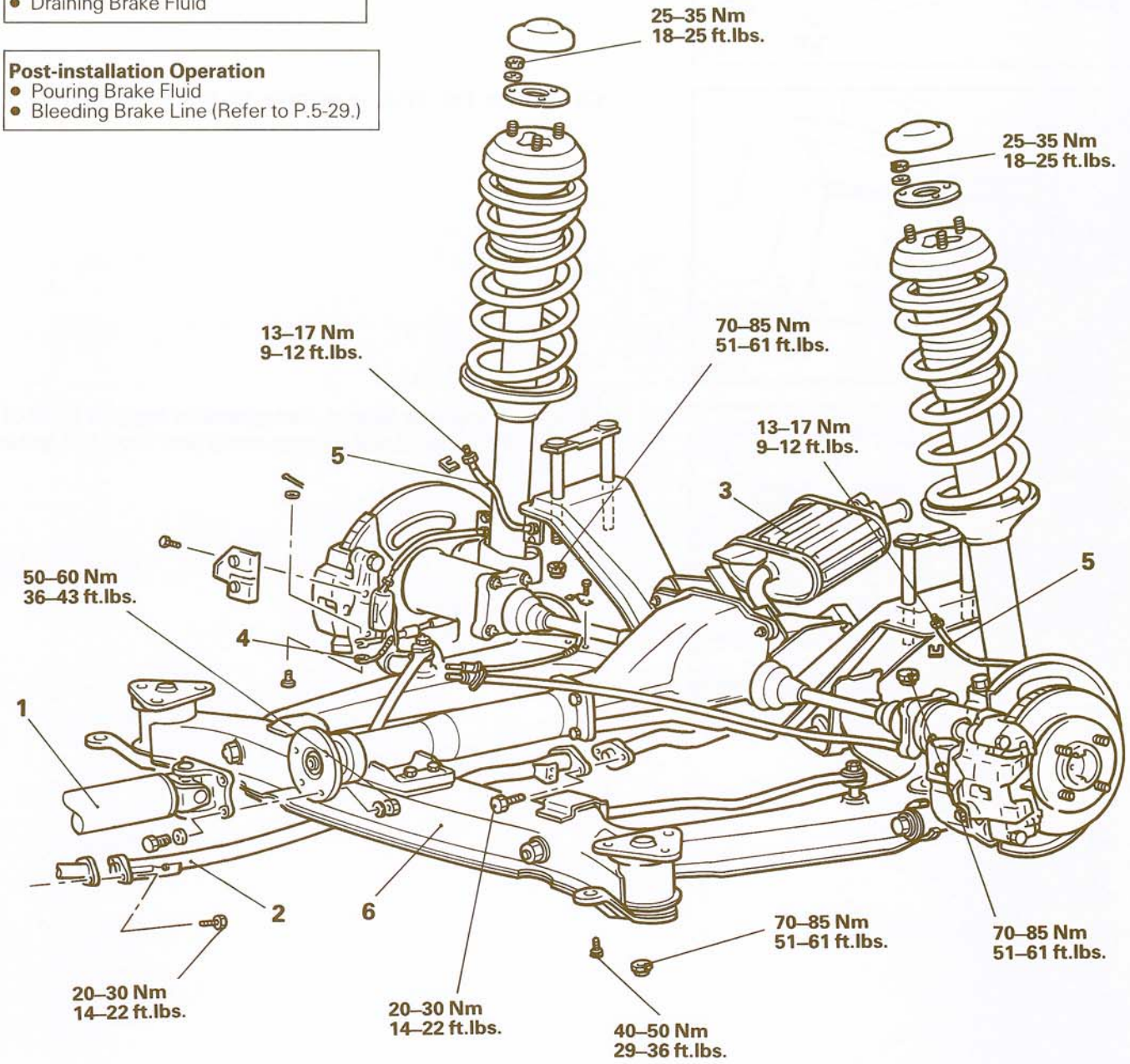

Removal steps

1. Propeller shaft
2. Center exhaust pipe
3. Main muffler
4. Parking brake cable connection
5. Rear brake hose connection
6. Suspension assembly

◀▶

NOTE
(1) Reverse the removal procedures to reinstall.
(2) ◀▶: Refer to "Service Points of Removal".

12Y714

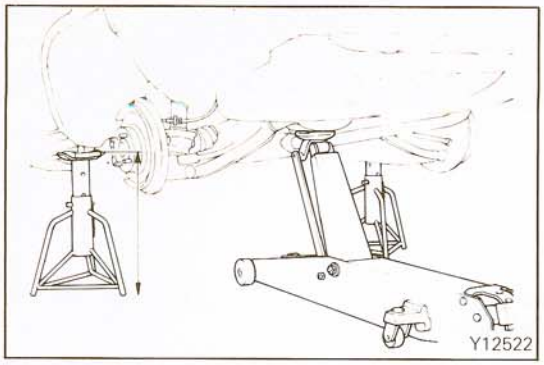

SERVICE POINT OF REMOVAL

N17GBAC

6. REMOVAL OF SUSPENSION ASSEMBLY

(1) Support the vehicle with rigid racks at the specified points, and remove the rear wheels.

NOTE
The height of the rigid racks should be 600 mm (24 in.) or more.

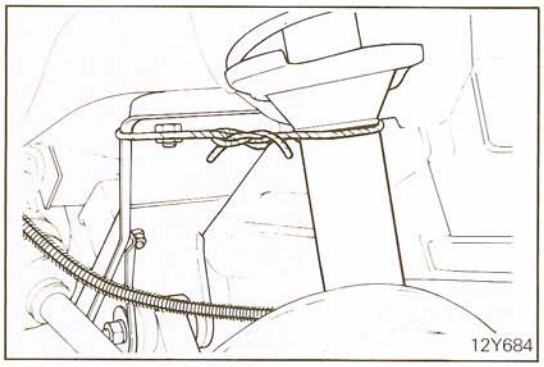

(2) Secure the strut assembly to the crossmember with rope.

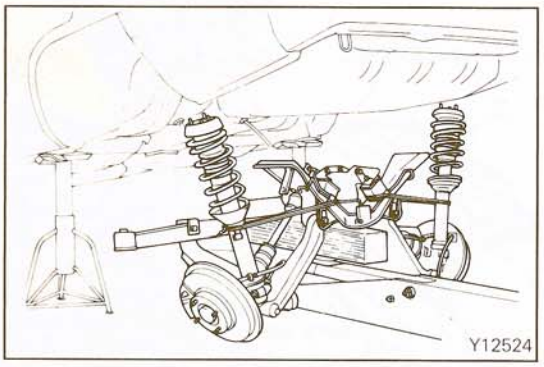

(3) Lower the jack slowly, being sure to support both of the left and right lower control arms and the strut assemblies.

STB Revision

LOWER CONTROL ARM

N17HAAA

REMOVAL AND INSTALLATION

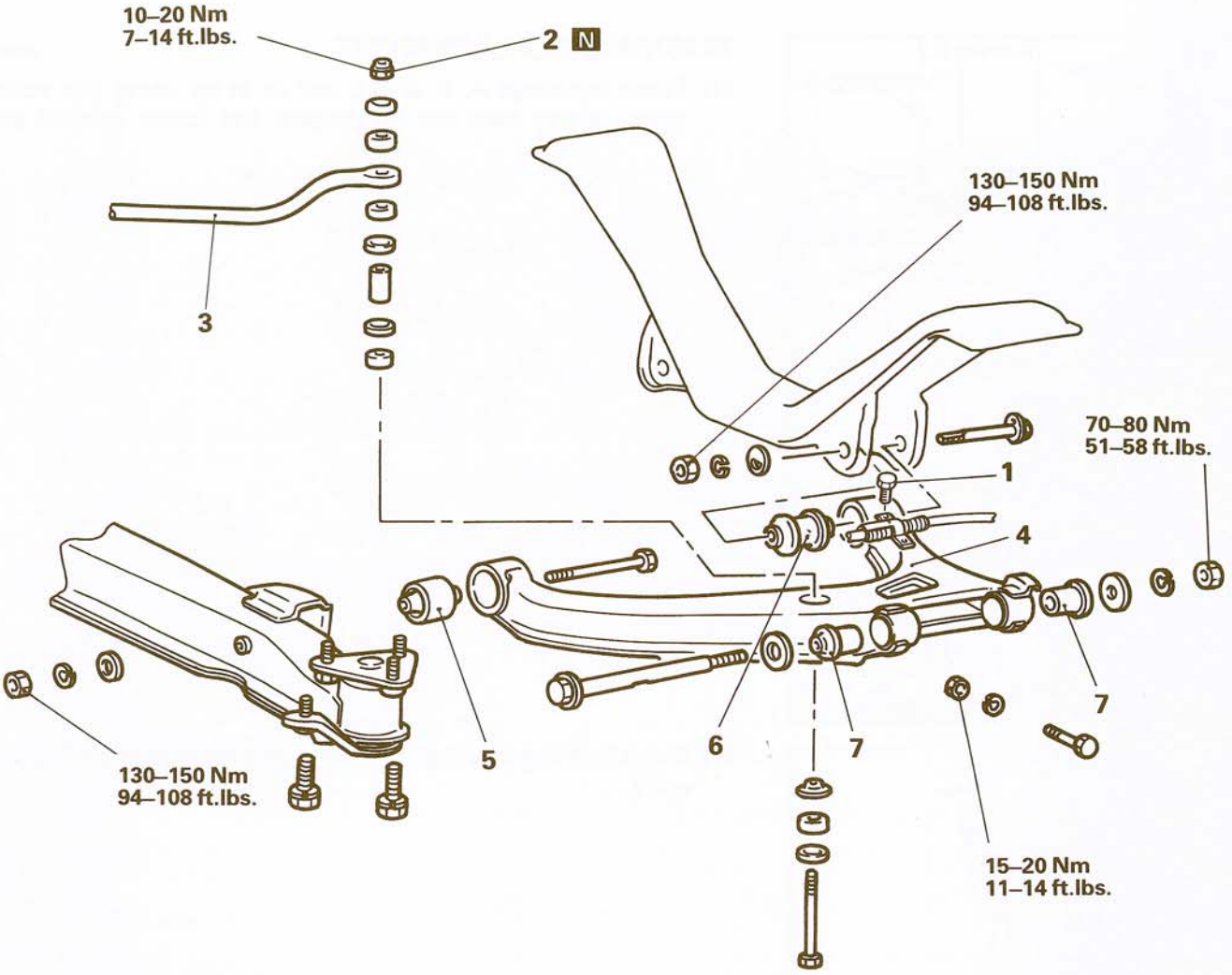

Removal steps

1. Parking brake cable mounting stay connection
2. Stabilizer bar mounting nut
3. Stabilizer bar connection
4. ➡◀ Lower control arm
5. Bushing A
6. Bushing B
7. Bushing C

NOTE
(1) Reverse the removal procedures to reinstall.
(2) ➡◀: Refer to "Service Points of Installation".
(3) N: Non-reusable parts

12Y713

INSPECTION

N17HBAA

- Check the lower control arm for deformation and damage.
- Check the bushings for damage and wear.
- Check the bolts for bend.

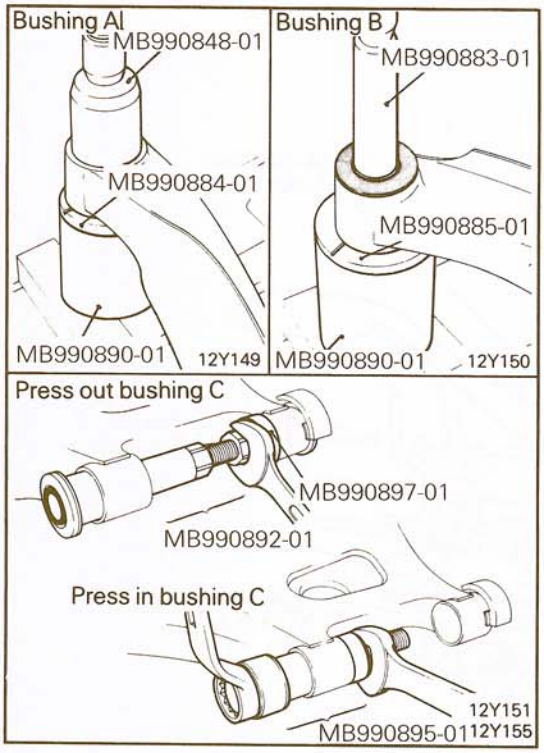

BUSHING REPLACEMENT

N17HCAA

(1) Press bushings A, B and C out or in by using the special tools, taking care not to deform the lower control arm.

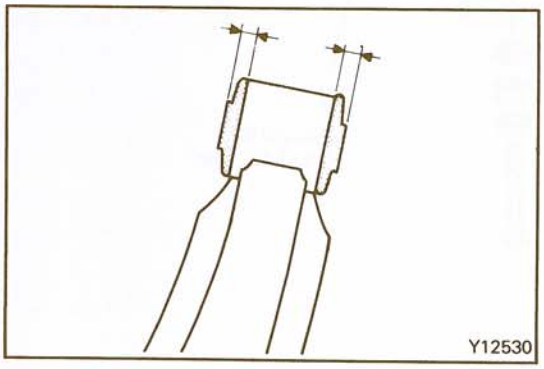

(2) Press bushing A and B in so that they project equally at both ends.

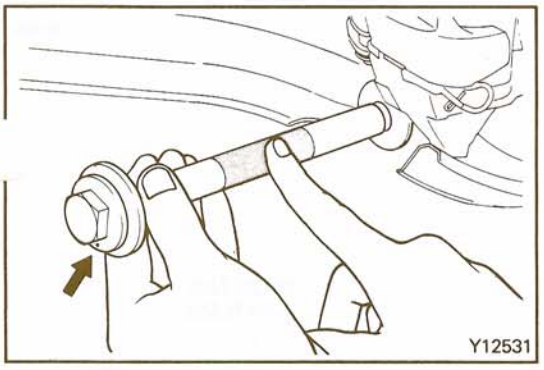

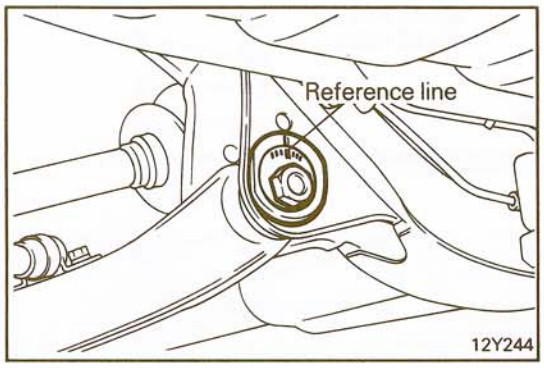

SERVICE POINT OF INSTALLATION N17HDAB

4. INSTALLATION OF LOWER CONTROL ARM

(1) Apply specified grease to the concave part of the shaft connecting the lower control arm to the axle housing.

Specified grease: Chassis grease SAE J310, NLGI No. 0

Caution
Apply a thin coat of specified grease, taking care that it does not adhere to the bushing.

(2) Insert the shaft with the mark on its head facing downward.

(3) When installing the lower control arm to the crossmember, align the mark on the crossmember with the reference line on the plate.

(4) Measure the wheel alignment.

STABILIZER BAR

N17IA--

REMOVAL AND INSTALLATION

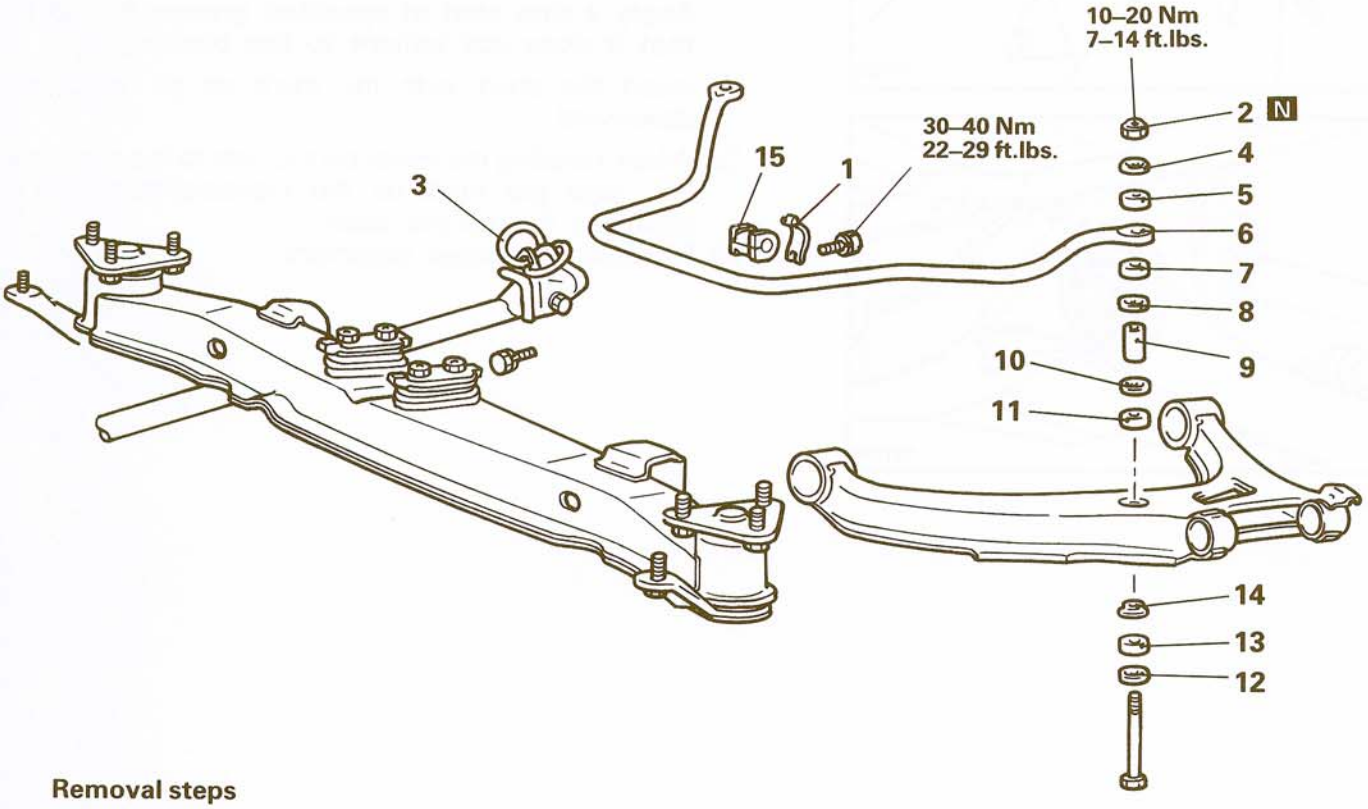

Removal steps

1. Bracket
2. Stabilizer bar mounting self lock nut
3. Center exhaust pipe rubber O-ring
4. Joint cup
5. Rubber bushing
◆◆ 6. Stabilizer bar
7. Rubber bushing
8. Joint cup
9. Collar
10. Joint cup
11. Rubber bushing
12. Joint cup
13. Rubber bushing
14. Joint cup
15. Bushing

NOTE
(1) Reverse the removal procedures to reinstall.
(2) ◆◆: Refer to "Service Points of Installation".
(3) N: Non-reusable parts

12Y712

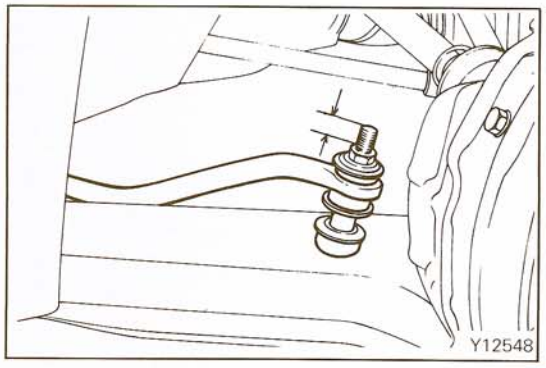

INSPECTION

N17IBAA

- Check the stabilizer bar for deformation and weakness.
- Check the bushings for cracks and damage.

SERVICE POINT OF INSTALLATION

N17ICAA

6. INSTALLATION OF STABILIZER BAR

When installing the stabilizer bar to the lower control arm, tighten the nut so as to obtain the service standard.

Service standard: 15 – 17 mm (0.59 – 0.67 in.)

STRUT ASSEMBLY

N17JA- -

REMOVAL AND INSTALLATION

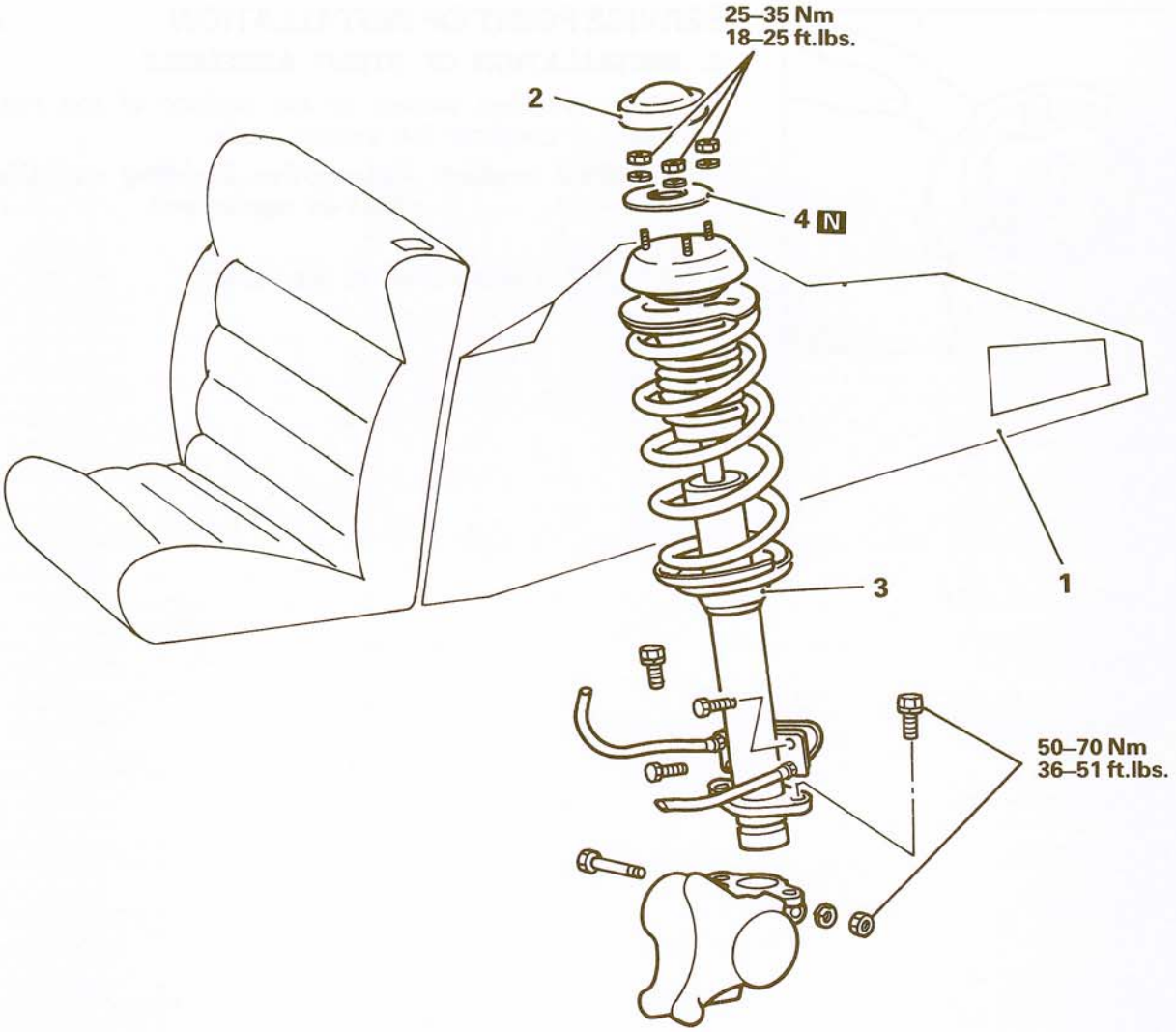

Removal steps

1. Trunk room side trim
2. Strut housing cap
3. Strut assembly
4. Gasket

NOTE
(1) Reverse the removal procedures to reinstall.
(2) ◆◆: Refer to "Service Points of Removal".
(3) ◆◆: Refer to "Service Points of Installation".
(4) N: Non-reusable parts

12Y720

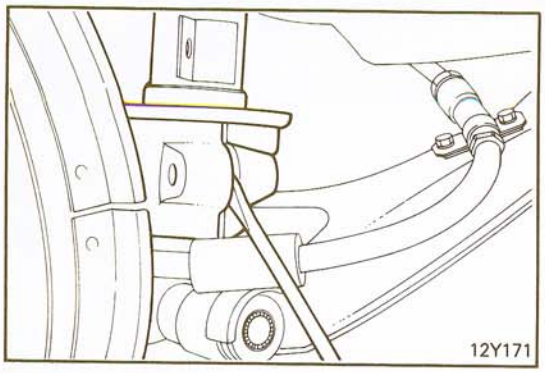

SERVICE POINT OF REMOVAL N17JBAA

3. REMOVAL OF STRUT ASSEMBLY

Detach the strut assembly from the axle housing.

NOTE
Push the axle housing downward while opening the coupling on the housing.

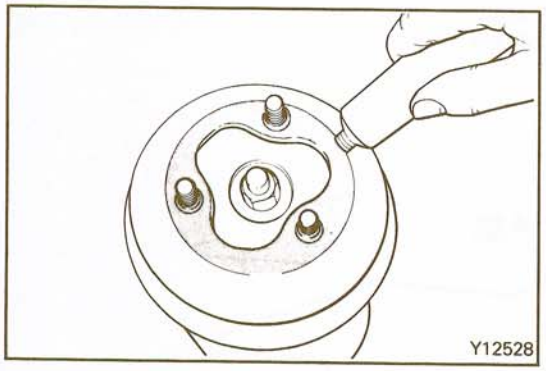

SERVICE POINT OF INSTALLATION N17JCAB

3. INSTALLATION OF STRUT ASSEMBLY

Apply specified sealant to the surface of the insulator where it contacts the vehicle body.

Specified sealant: Automotive Bedding and Glazing 8506 or equivalent

NOTE
The gasket is installed at the factory.

DISASSEMBLY AND REASSEMBLY

N17JD--

Gas damper type

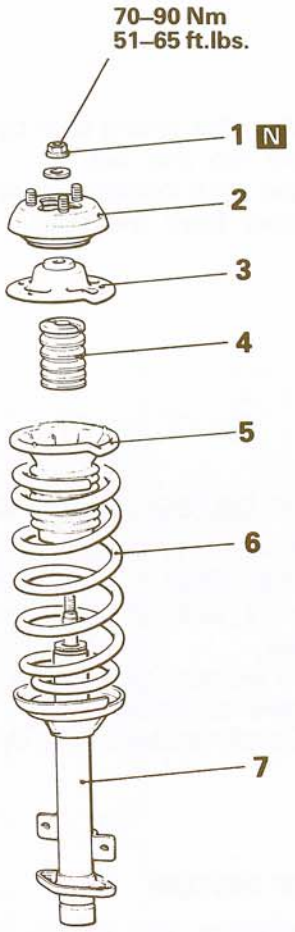

12Y664

Hydraulic type

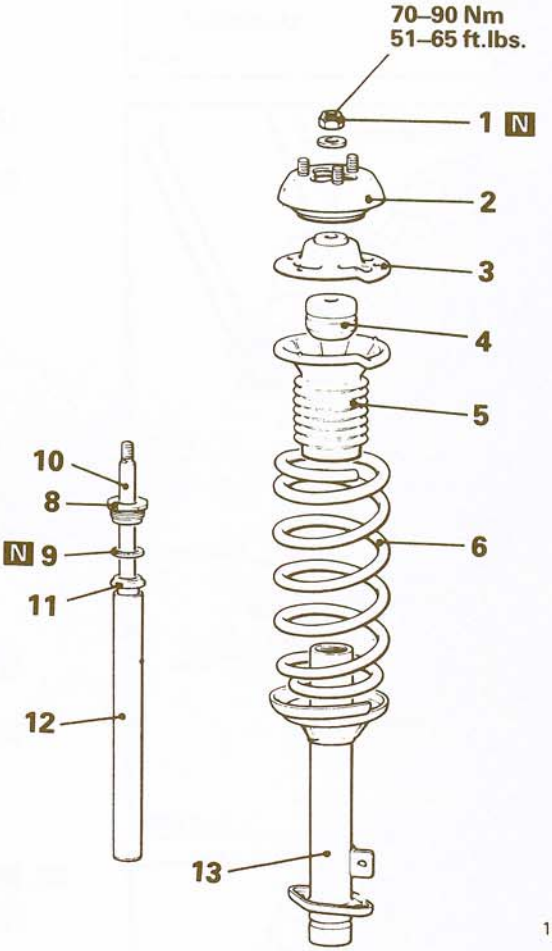

12Y696

Disassembly steps

1. Self lock nut
2. ◆◆ Strut insulator
3. ◆◆ Spring seat
4. Rubber helper
5. Dust cover
6. ◆◆ Coil spring
7. Strut assembly
8. ◆◆ ◆◆ Oil seal assembly
9. ◆◆ Square section O-ring
10. ◆◆ ◆◆ Piston
11. ◆◆ Piston guide
12. ◆◆ Cylinder
13. Outer shell

NOTE
(1) Reverse the disassembly procedures to reassemble.
(2) ◆◆: Refer to "Service Points of Disassembly".
(3) ◆◆: Refer to "Service Points of Reassembly".
(4) N: Non-reusable parts.

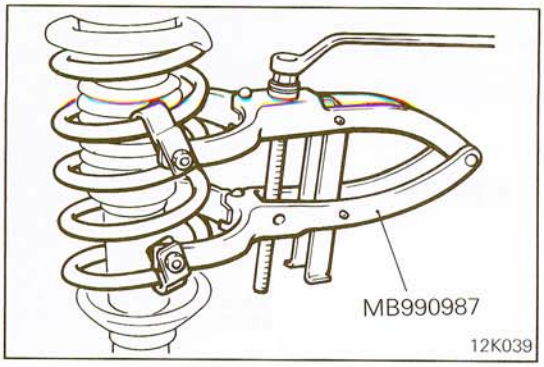

SERVICE POINTS OF DISASSEMBLY

N17JEAB

6. REMOVAL OF COIL SPRING

(1) Compress the coil spring by using the special tool.

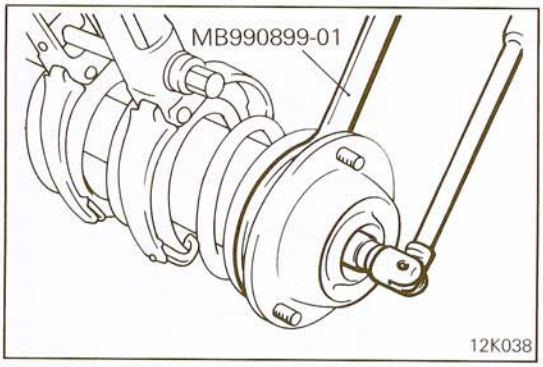

(2) While holding the spring seat by using the special tool, remove the top end nut.
(3) Take out the strut insulator, spring seat, dust cover and rubber helper from the strut.

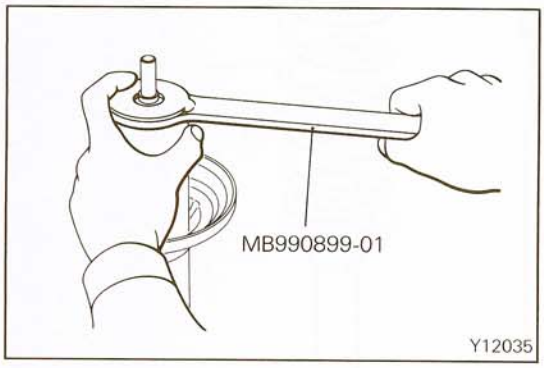

8. REMOVAL OF OIL SEAL ASSEMBLY

(1) To prevent entry of foreign material into the cylinder, shock absorber fluid, etc. during disassembly, thoroughly clean the external surface of the strut before disassembly.
(2) Lightly hold the strut upright in a vice with the piston rc at the lowest position.
(3) Remove the oil seal assembly by using the special tool.

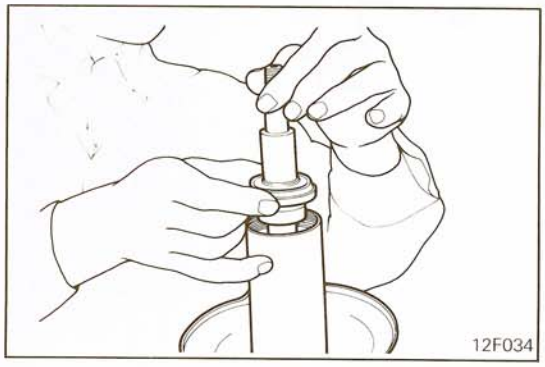

10. REMOVAL OF PISTON

(1) Slowly withdraw the piston rod from the cylinder together with the piston guide.

Caution
Because the piston rod has a highly precise surface, handle it carefully.

(2) Drain the shock absorber fluid.
(3) Remove the piston guide from the piston rod.
(4) Remove the cylinder from the strut outer shell.

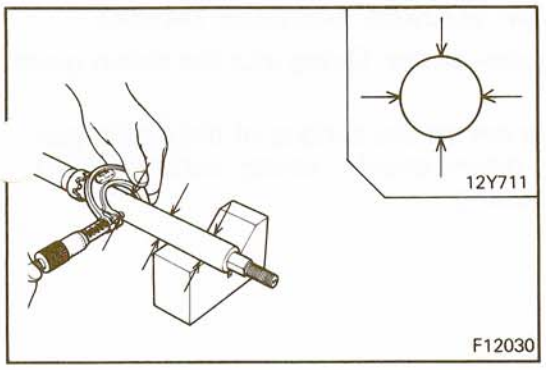

INSPECTION N17JFAA

- Check the piston for outer diameter not lower than the limit.

  Limit: 21.95 mm (0.8642 in.)

  NOTE
  Measure the outer diameter at 6 points as shown. If the micron meter reading is lower than the limit, replace the shock absorber assembly.
- Check the strut insulator for wear, cracks and peeling.
- Check the spring seat, rubber helper, rubber helper seat and dust cover for cracks and damage.
- Check the spring for weakness, cracks and damage.
- Check the outer shell of strut for cracks and damage.
- Check the piston rod of strut for bend and wear.

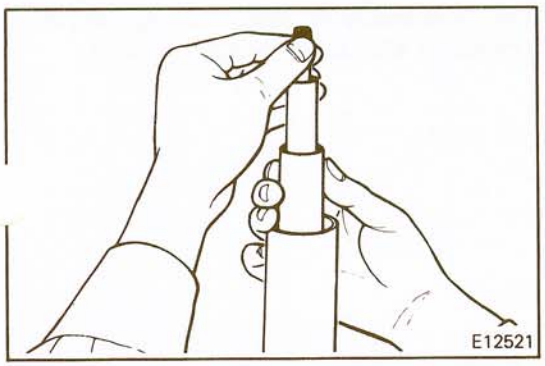

SERVICE POINTS OF REASSEMBLY N17JGAB

12. INSTALLATION OF CYLINDER / 10. PISTON

(1) Apply shock absorber fluid to the cylinder, piston and each sliding surface.
(2) Slowly insert the piston rod into the cylinder.
(3) Install the cylinder and piston assembly in the outer shell.

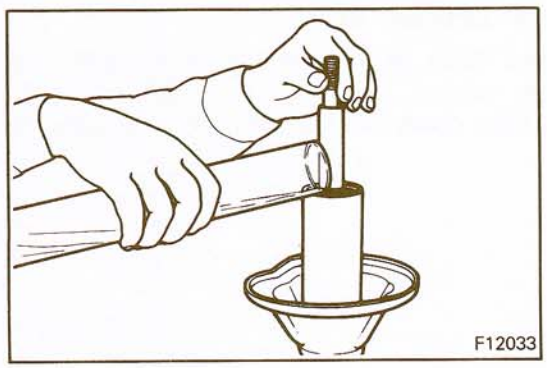

(4) While moving the piston rod slowly up and down, pour shock absorber fluid into the cylinder.

NOTE
The above quantities are the capacities when the cylinder, piston and outer shell are completely dry. Be sure to take the amount of fluid adhering to the walls into consideration.

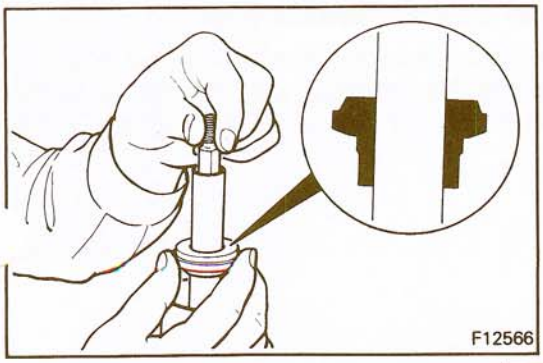

11. INSTALLATION OF PISTON GUIDE

With the flange part of the piston guide facing upward, install the piston guide onto the piston rod until it comes in contact with the edge of the cylinder.

STB Revision

9. INSTALLATION OF SQUARE SECTION O-RING

Install the new square-section O-ring into the piston guide.

NOTE

When the O-ring is set on the surface of the piston guid press the O-ring down evenly, taking care to preve inclination and doubling.

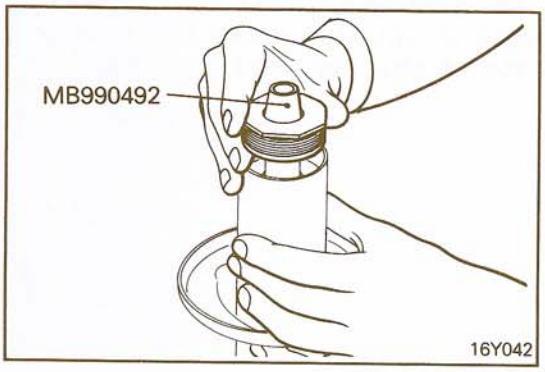

8. INSTALLATION OF OIL SEAL ASSEMBLY

(1) Attach the special tool to the piston rod end.
(2) Apply shock absorber fluid to the special tool and install the oil seal assembly.

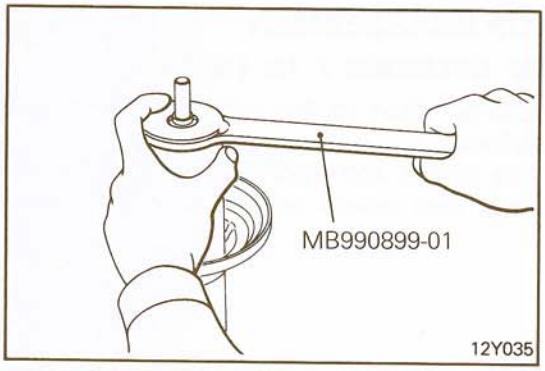

(3) Tighten the oil seal assembly by using the special tool, until its edge contacts the strut outer cylinder.

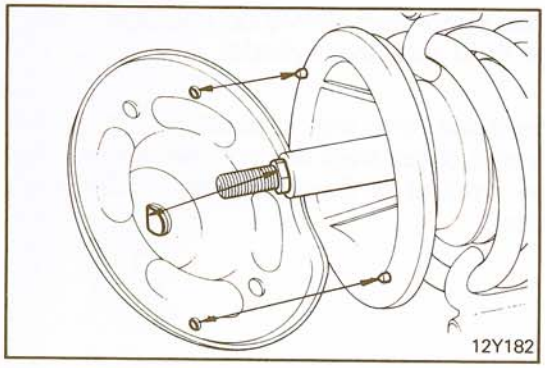

3. INSTALLATION OF SPRING SEAT

Align the D-shaped hole in the spring seat with the indentation on the piston rod, and be sure that the projections on the dust cover are aligned with the holes in the spring seat.

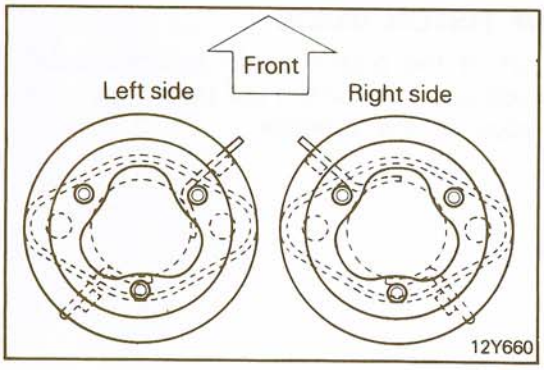

2. INSTALLATION OF STRUT INSULATOR

Temporarily tighten the strut insulator with a top end nut, and align the studs in the insulator with the holes in the bracket at the lower end of the strut, as shown in the illustration.

STB Revision

FRONT SUPPORT

N17KA- -

REMOVAL AND INSTALLATION

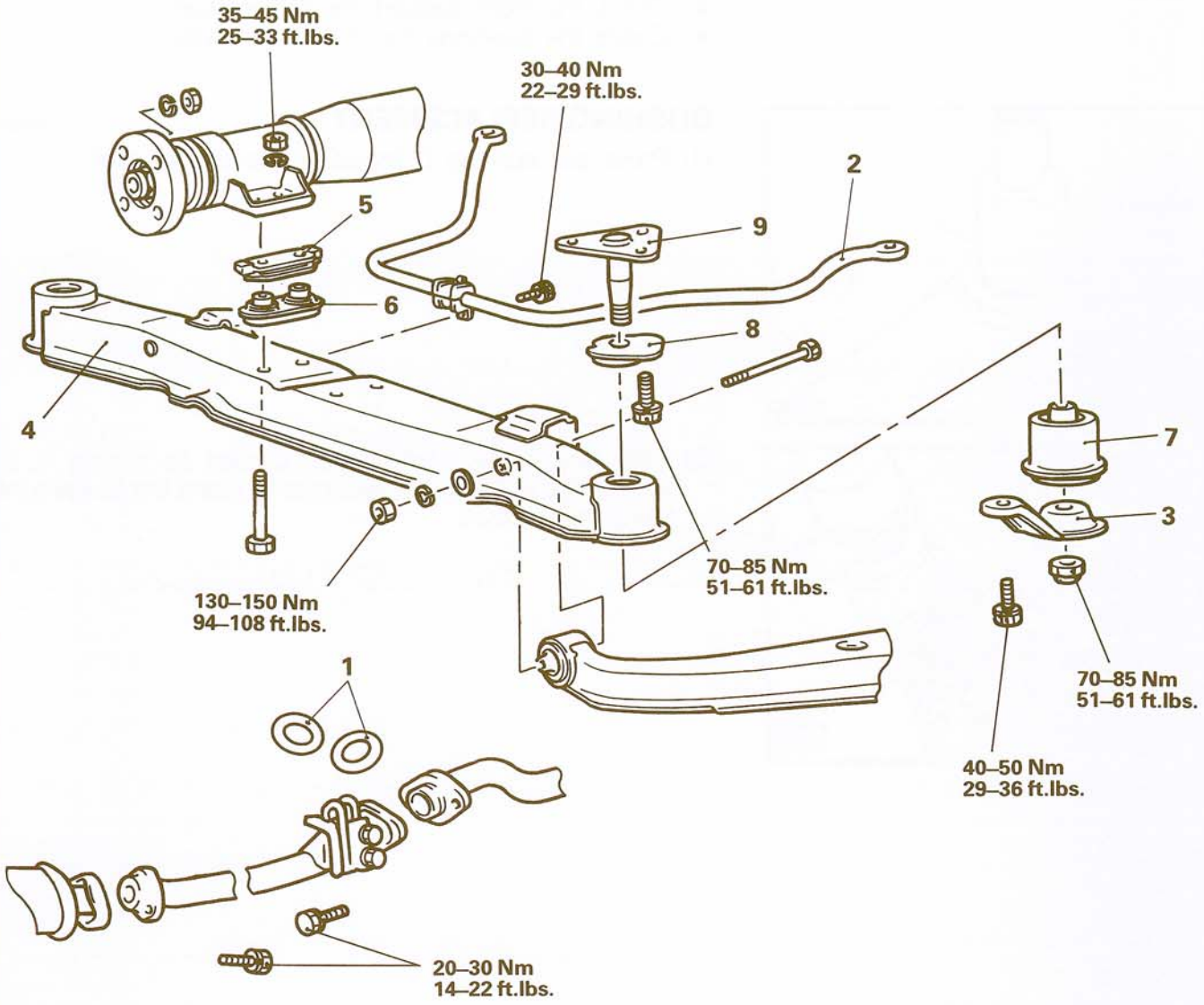

Removal steps

1. Center exhaust pipe rubber O-ring
2. Stabilizer bar
3. Lower stopper
◆◆ 4. Front support
5. Upper cushion
6. Lower cushion
7. Bushing D
8. Upper stopper
9. Pin assembly

NOTE
(1) Reverse the removal procedures to reinstall.
(2) ◆◆: Refer to "Service Points of Removal".

12Y715

SERVICE POINT OF REMOVAL N17KBAA

4. REMOVAL OF FRONT SUPPORT

(1) Support the torque tube assembly with a jack or similar equipment.
(2) Remove the front support.

INSPECTION N17KCAA

- Check the front support for deformation.
- Check the bushings for cracks and wear.

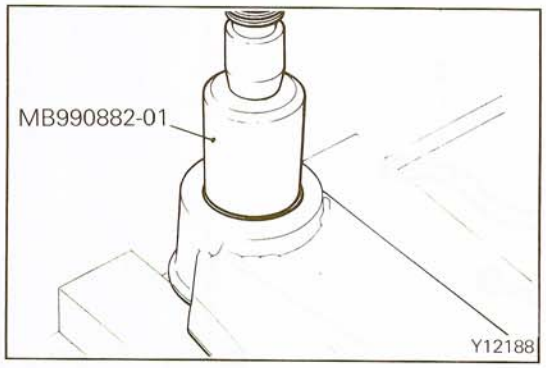

BUSHING REPLACEMENT N17KDAB

(1) Press out bushing D by using the special tool.

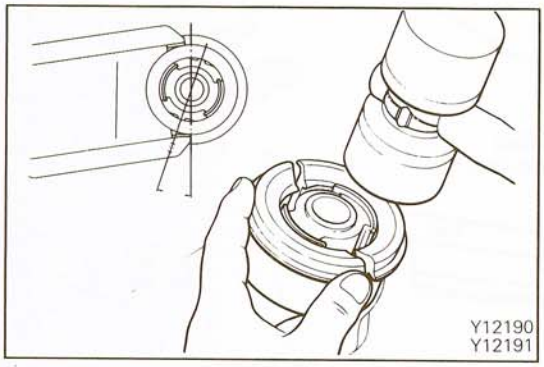

(2) With the holes in bushing D located as shown in the illustration, use a plastic hammer to insert the bushing into the front support.

REAR CROSSMEMBER

N17LA- -

REMOVAL AND INSTALLATION

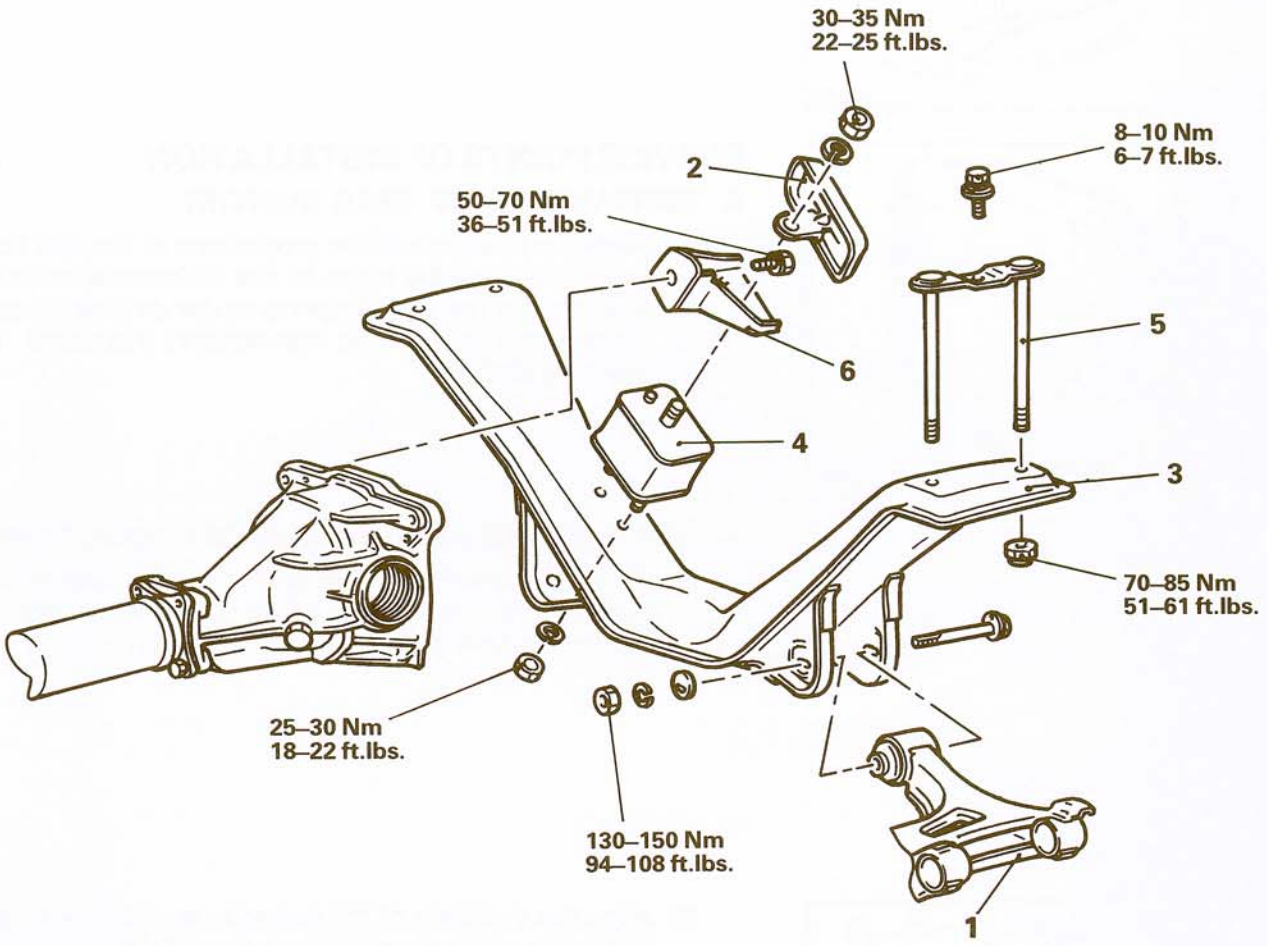

Removal steps

1. Lower control arm
2. Rear support protector
3. Crossmember
4. Rear support insulator
5. Bolt assembly
6. Rear support

NOTE
(1) Reverse the removal procedures to reinstall.
(2) ◆◆: Refer to "Service Points of Removal".
(3) ◆◆: Refer to "Service Points of Installation".

12Y718

SERVICE POINTS OF REMOVAL

N17LBAA

3. REMOVAL OF CROSSMEMBER

(1) Support the differential carrier with a jack.
(2) Remove the crossmember.

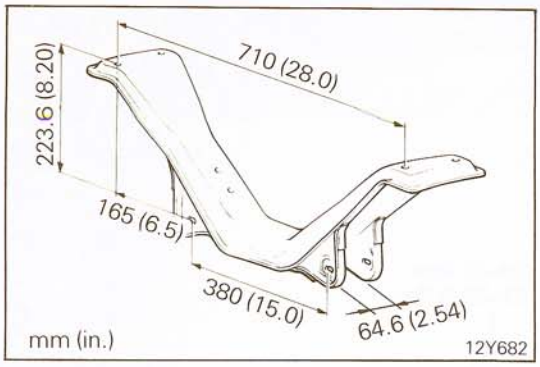

INSPECTION

N17LCAA

- Check the crossmember for cracks, deflection and damage.
- Check the rear support insulators for cracks and peeling.
- Check the rear support for deformation and damage.

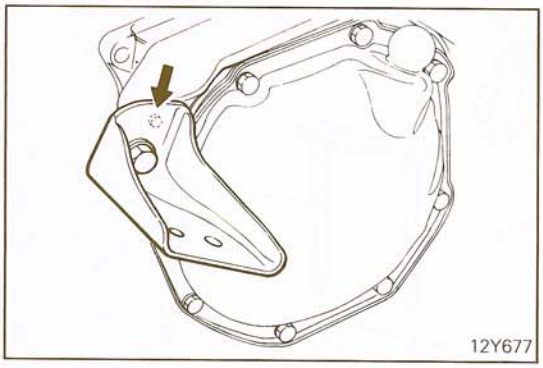

SERVICE POINTS OF INSTALLATION

N17LDAA

6. INSTALLATION OF REAR SUPPORT

(1) Align the positions of the projections of the rear support to the determining holes of the differential carrier, and then mount the rear supports to the differential carrier.
(2) Temporarily mount the rear-support insulators to the rear supports.

4. INSTALLATION OF REAR SUPPORT INSULATOR

(1) Align the rear-support insulators to the crossmember mounting holes, and then, while slanting the differential carrier, mount it to the crossmember.

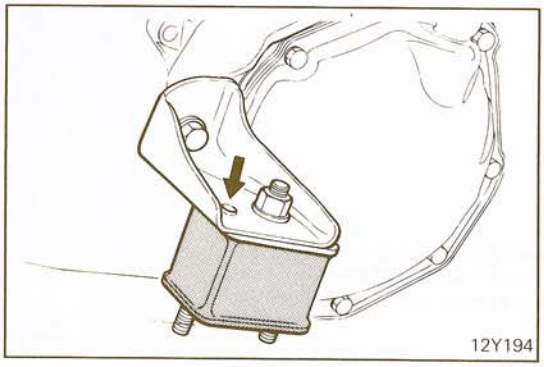

(2) Align the positions of the projections of the rear-support insulators to the determining holes of the rear supports, and then tighten the mounting nuts of the rear support insulators.

STB Revision

STEERING
POWER

CONTENTS

GENERAL INFORMATION **2**

OIL PUMP **32**

POWER STEERING GEAR BOX **22**

SERVICE ADJUSTMENT PROCEDURES **9**
- Air Bleeding 12
- Checking Drive Belt Tension 11
- Checking Fluid Level 11
- Checking Stationary Steering Effort 10
- Checking Steering Angle 10
- Checking Steering Gear Backlash 9
- Checking Steering Wheel Free Play 9
- Checking Steering Wheel Return to Center 11
- Measuring Ball Joint End Play 9
- Oil Pump Pressure Test 13
- Replacement of Fluid 12
- Steering Wheel Centering 13

SPECIAL TOOLS **6**

SPECIFICATIONS **3**
- General Specifications 3
- Lubricants 5
- Sealant and Adhesive 5
- Service Specifications 3
- Torque Specifications 4

STEERING COLUMN AND SHAFT **16**

STEERING HOSES **37**

STEERING LINKAGE **38**

TROUBLESHOOTING **7**
- Droning Noise
- Excessive Play of Steering Wheel
- Hissing Noise
- Oil Leakage from Gear Box
- Oil Leakage from Hose Assembly
- Oil Leakage from Hose Connection
- Oil Leakage from Oil Pump
- Oil Leakage from Oil Reservoir
- Rattling Noise
- Shrill Noise
- Squeaking Noise
- Squealing Noise
- Steering Wheel Operation is Heavy (Low Power Assist)
- Vibration
- Whistling Noise

GENERAL INFORMATION

N19BABC

The steering column uses the tilt steering system to provide optimum driving position.
The power steering system uses an integral gear box (ball nut type) and a vane type oil pump.
This power steering system is characterized by steering effort that changes with the engine speed Namely, only a slight steering effort is required when the engine speed is low and it increases with increasing engine speed, thus offering outstanding steering stability.

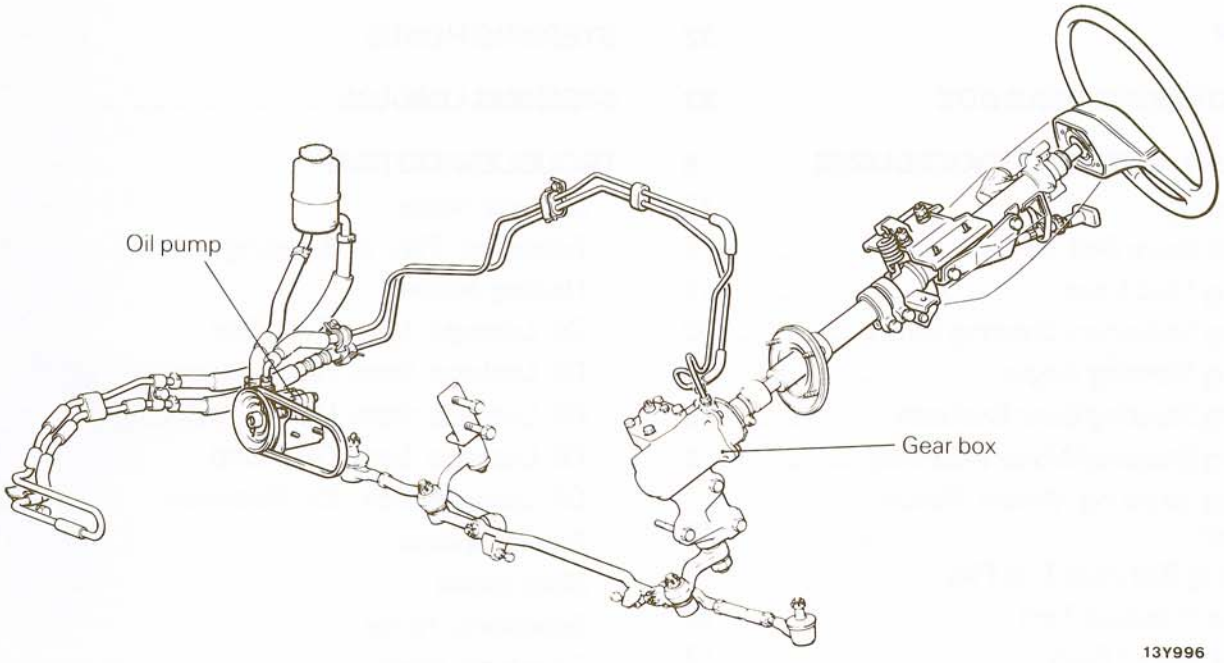

SPECIFICATIONS

N19CA--

GENERAL SPECIFICATIONS

ms	Specifications
Steering wheel diameter mm (in.)	380 (15.0)
Steering column and shaft type	Collapsible steering column and tilt-adjustable steering wheel
Gear box	
Steering gear type	Ball and nut, torsion bar type
Steering gear ratio	14.25
Oil pump	
Oil pump type	Vane type
Displacement	9.6 cm^3/rev. (0.59 in^3/rev.)

SERVICE SPECIFICATIONS

N19CB--

Standard value	
Steering angle	
Vehicles without an intercooler	
Inner wheel	$38°^{\ 0}_{-3°}$
Outer wheel	$32°^{\ 0}_{-2°}$
Vehicles with an intercooler	
Inner wheel	$39°^{\ 0}_{-3°}$
Outer wheel	$32°^{\ 0}_{-2°}$
Steering wheel free play mm (in.)	25 (1.0) or less
Stationary steering effort N (lbs.)	30 (6.6) or less
V-belt tension mm (in.)	9 – 12 (0.35 – 0.47)
Mainshaft starting torque Ncm (in.lbs.)	25 – 65 (2 – 6)
Mainshaft total starting torque Ncm (in.lbs.)	50 – 90 (4 – 8)
Cross-shaft axial play mm (in.)	0.05 (0.002) or less
Backlash between ball groove of rack piston and balls mm (in.)	0.05 – 0.1 (0.002 – 0.004)
Oil pump pressure kPa (psi)	
Gauge hose valve closed	7,500 – 8,200 (1,067 – 1,166)
Gauge hose valve opened	980 (142) or less
Ball joint starting torque Ncm (in.lbs.)	
Tie rod and relay rod (for pitman arm)	50 – 250 (4 – 22)
Relay rod (for idler arm)	50 – 150 (4 – 13)
Idler arm starting torque Ncm (in.lbs.)	300 – 900 (26 – 78)
Spring scale reading N (lbs.)	26 – 78 (6 – 18)

Limit	
Steering wheel free play mm (in.)	50 (2.0)
Steering gear backlash mm (in.)	0.5 (0.02)
Backlash between ball groove of rack piston and balls mm (in.)	0.2 (0.008)
Clearance between oil pump drive shaft and bushing mm (in.)	0.2 (0.008)
Oil pump pressure kPa (psi)	
Gauge hose valve closed	1,500 (218)

TORQUE SPECIFICATIONS

N19CC- -

Items	Nm	ft.lbs.
Steering column and shaft		
Steering wheel lock nut	35 – 45	25 – 33
Column tube clamp	5 – 8	3.6 – 6.0
Steering column support plate	9 – 14	6.5 – 10
Steering shaft to gear box bolt	20 – 25	14 – 18
Tilt link cover	9 – 14	6.5 – 10
Power steering gear box		
Side cover	45 – 55	33 – 40
Adjusting bolt lock nut	30 – 45	22 – 33
Breather plug	3 – 4	2 – 3
Pitman arm installation	130 – 150	94 – 108
Gear box installation	35 – 40	25 – 29
Circulators installation	3.5 – 4.5	2.5 – 3.3
Valve housing	45 – 55	33 – 40
Lock nut*	180 – 230*	130 – 166*
Oil pump		
Suction connector	6 – 10	4 – 7
Connector	50 – 70	36 – 51
Reservoir	8 – 12	6 – 9
Oil pump bracket	14 – 21	10 – 15
	27 – 41	20 – 30
Oil pump brace bolt	14 – 21	10 – 15
Oil pump cover	18 – 22	13 – 16
Steering hoses		
Pressure hose	30 – 40	22 – 29
Return hose	40 – 50	29 – 36
Clamp A	3.2 – 4.8	2.3 – 3.5

NOTE
* If the special tool is used to measure the tightening torque, the measurement is 135 – 175 Nm (98 – 127 ft.lbs.).

Items	Nm	ft.lbs.
Steering linkage		
Tie rod end	35 – 45	25 – 33
Tie rod socket and relay rod	35 – 45	25 – 33
Relay rod to pitman arm	35 – 45	25 – 33
Relay rod to idler arm	35 – 45	25 – 33
Idler arm and bracket	40 – 60	29 – 43
Tie rod end stud	50 – 55	36 – 40
Idler arm bracket and frame	35 – 40	25 – 29
Stopper bolt lock nut for adjustment of steering angle	20	14

LUBRICANTS

N19CD- -

Items	Specified lubricants	Quantity
Power steering fluid	Automatic transmission fluid DEXRON or DEXRON II type	900 cm^3 (54.9 $in.^3$)
Steering shaft bearing	Multipurpose grease SAE J310, NLGI No. 2	As required
Joint bearing	Multipurpose grease SAE J310, NLGI No. 2	As required
Inside of joint socket and spring	Multipurpose grease SAE J310, NLGI No. 2	As required
Joint pin A	Multipurpose grease SAE J310, NLGI No. 2	As required
ıside of joint pin retainer	Multipurpose grease SAE J310, NLGI No. 2	As required
Oil seal lip of cross-shaft	Multipurpose grease SAE J310, NLGI No. 2	As required
Needle bearing of side cover	Multipurpose grease SAE J310, NLGI No. 2	As required
U-packing of side cover	Multipurpose grease SAE J310, NLGI No. 2	As required
Oil seal lip of top cover	Multipurpose grease SAE J310, NLGI No. 2	As required
Idler arm support and bushings	Multipurpose grease SAE J310, NLGI No. 2	As required

SEALANT AND ADHESIVE

N19CE- -

Items	Specified sealants	Quantity
Outer surface of steering shaft bearing	3M Super Weatherstrip Adhesive 8001 or equivalent	As required
Inner bore of dash panel cover bolt holes	3M All-Around Autobody Sealant 8500 or equivalent	As required

SPECIAL TOOLS

N19DA--

Tool (Number and name)	Use	Tool (Number and name)	Use
MB990635-01 Steering linkage puller 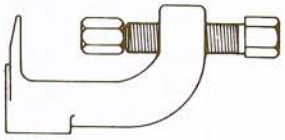 MB990778-01 Ball joint remover 	Disconnection of the steering linkage ball joints	MB990925-01 Bearing and oil seal installer set  MB990938-01 Handle 	Installation of the oil se and the ball bearing (Refer to GROUP 3)
MB990809-01 Pitman arm puller 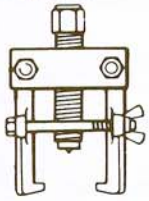	Removal of the pitman arm	MB990228-01 Preload socket 	Measurement of the mainshaft starting torque
MB990852-01 Housing locking nut special wrench 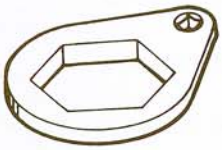	Removal and installation of the housing lock nut	MB990662-01 Oil pressure gauge 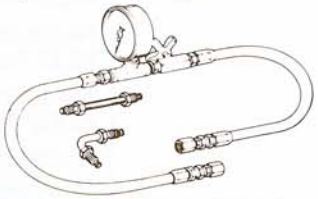	Measurement of the oil pump pressure
MB990201-01 Top cover remover 	Removal and installation of the top cover	MB990854-01 Snap ring installer 	Installation of the snap ring
MB990716-01 (for pressure hose) MB990717-01 (for return hose) Oil pipe spanner wrench 	Disconnection of the pressure and return hose		

TROUBLESHOOTING

N19EABA

Symptom	Probable cause	Remedy	Reference page
Excessive play of steering wheel	Excessive play in steering gear box	Repair	19-24
	Loose steering gear mounting bolts	Retighten	19-22
	Loose or worn stud of tie rod end	Retighten or replace as necessary	19-39
Steering wheel operation is heavy (Low power assist)	Loose belt	Adjust the belt tension	19-11
	Damaged belt	Replace the belt	19-32
	Low fluid level	Refill with fluid	19-11
	Air in fluid line	Bleed the system	19-12
	Twisted or damaged hoses	Correct the hose routing or replace the hoses	19-37
	Fluid leakage	Check the fluid leakage	–
	Malfunction of gear box	Check and replace the gear box if necessary	19-23
	Malfunction of oil pump	Check the oil pump pressure and repair oil pump	19-13, 33
Rattling noise	Loose installation of oil pump or gear box	Retighten the oil pump or gear box	19-22, 32
	Interference around column or between pressure hose and other parts	Correct or replace the pressure hose and the parts around the column	19-16, 18, 37
	Abnormal noise inside of gear box and oil pump	Replace the gear box or oil pump	19-22, 32
Shrill noise	Air sucked into oil pump	Check the oil level and hose clips, bleed the system or replace the oil pump	19-11, 32, 37
	Oil pump seizure	Replace the oil pump	19-32
Squealing noise	Loose belt	Adjust the belt tension	19-11
	Oil pump seizure	Replace the oil pump	19-32
Hissing noise	Air sucked into oil pump	Check the oil level and hose clips; bleed the system	19-11, 37
	Damage to the olive of the gear box port section	Replace the gear box	19-22
	Malfunction of return hose	Replace the hose	19-37
Whistling noise	Malfunction of gear box port section	Replace the gear box	19-22

Symptom	Probable cause	Remedy	Reference page
Droning noise	Loose mounting bolt on oil pump or oil pump bracket	Retighten the pump bracket or pump mounting bolt	19-32
	Poor condition of oil pump body*	Replace the oil pump	19-32
Squeaking noise	Malfunction of steering stopper contact	Check and adjust the steering stopper	19-39
	Interference of wheel with vehicle body	Adjust the steering angle	19-10
	Malfunction of gear box	Replace the gear box	19-22
Vibration**	Air suction	Bleed the system	19-12
	Malfunction of gear box	Replace the gear box	19-22
Oil leakage from hose connection	Improperly tightened flare nut Incorrectly installed hose Improperly clamped hose	Check and repair or replace	19-37
Oil leakage from hose assembly	Damaged or clogged hose Hose connector malfunction	Replace	19-37
Oil leakage from oil reservoir	Improperly welded pipe	Weld the pipes or replace	19-33
	Overflow	Bleed the system or adjust the oil level	19-11, 12
Oil leakage from oil pump	Malfunction of oil pump housing	Replace the oil pump	19-32
	Malfunction of O-ring and/or oil seal	Replace the O-ring and oil seal	19-33
Oil leakage from gear box	Malfunction of gear box housing (including leakage from air hole)	Replace the gear box	19-22
	Malfunction of O-ring and/or oil seal	Replace the O-ring and oil seal	19-24

NOTE
* A slight "beat noise" is produced by the oil pump; this is not a malfunction. (This noise occurs particularly when a stationary steering effort is made.)
** A slight vibration may be felt when the stationary steering effort is made due to the condition of the road surface. To check whether the vibration actually exists or not, test-drive the vehicle on a dry concrete or asphalt surface. Moreover, a very slight amount of vibration is not a malfunction.

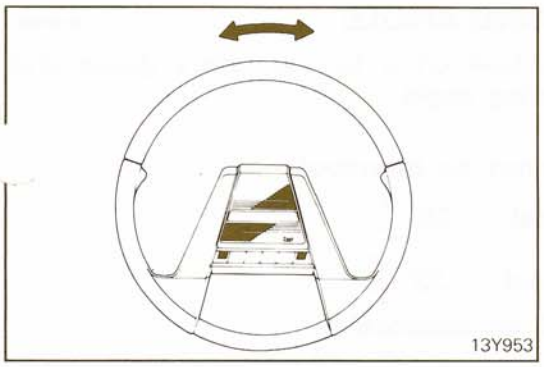
13Y953

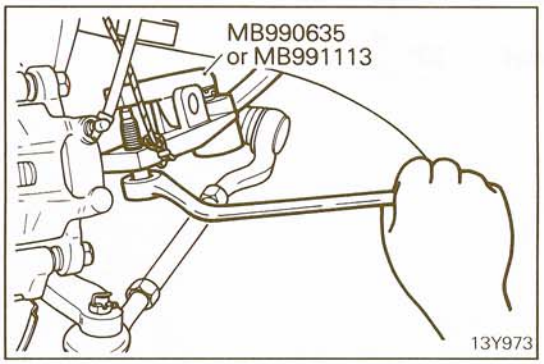

13Y973

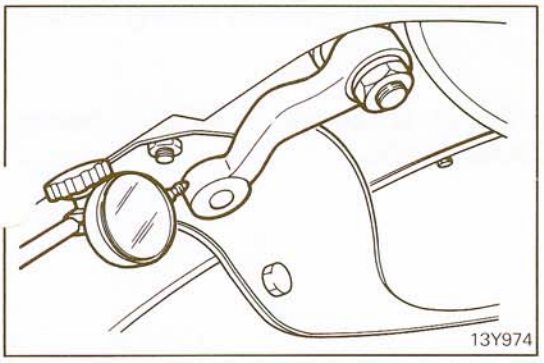
13Y974

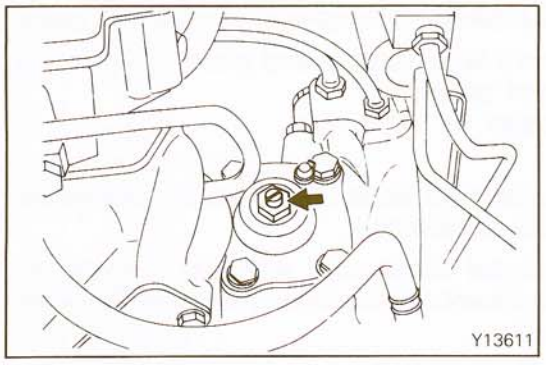
Y13611

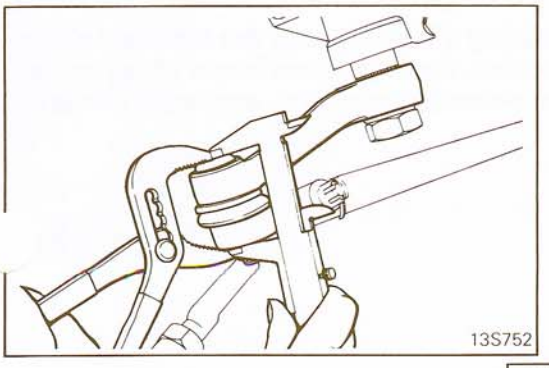
13S752

SERVICE ADJUSTMENT PROCEDURES

N19FABD

CHECKING STEERING WHEEL FREE PLAY

1. With the engine stationary and the steering wheel in the straight-ahead position, apply a force of 5 N (1.1 lbs.) to the steering wheel in the peripheral direction. Measure the play of the circumference of the steering wheel.

   Standard value: 25 mm (1.0 in.) or less
   Limit: 50 mm (2.0 in.)

2. If the measured value exceeds the limit, check the steering gear backlash, and linkage ball joint end play.

CHECKING STEERING GEAR BACKLASH

N19FOAC

1. Jack up the vehicle front and hold the steering wheel in the straight-ahead position.
2. Disconnect the relay rod and pitman arm using the special tool.

   Caution
   1. Tie the string to a nearby part so that the special tool will not come loose.
   2. Do not remove the ball joint nut but simply loosen.

3. Measure the steering gear backlash at the pitman arm top end with dial indicator.

   Limit: 0.5 mm (0.02 in.)

4. If the measured value exceeds the limit, screw in the steering gear box adjusting bolt until the steering wheel free play is within the range of standard value.

   Caution
   1. Be sure to make the adjustment with the steering wheel in the straight-ahead position.
   2. If the adjusting bolt is overtightened, more steering effort will be required, and return of the wheel will be adversely affected.

MEASURING BALL JOINT END PLAY

N19FPAA

(1) Clamp the ball joint with pliers.
(2) With a caliper gauge set as illustrated, compress the ball stud to measure the displacement.

   Limit: 1.5 mm (0.06 in.)

(3) If the measured value exceed the limit, replace the ball joint.

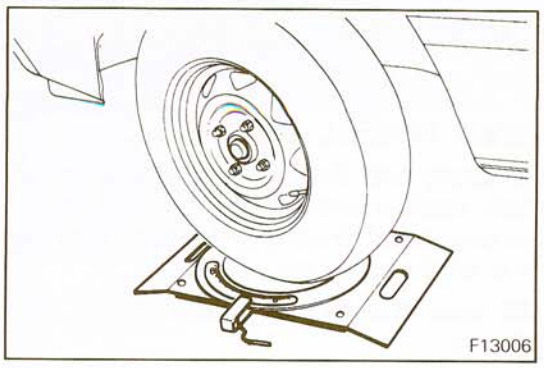

CHECKING STEERING ANGLE N19FDBC

1. Place the front wheel on a turning radius gauge and measure the steering angle.

Standard value:

Vehicles without an intercooler

Inner wheel	**38° $^{0°}_{-3°}$**
Outer wheel	**32° $^{0°}_{-2°}$**

Vehicles with an intercooler

Inner wheel	**39° $^{0°}_{-3°}$**
Outer wheel	**32° $^{0°}_{-2°}$**

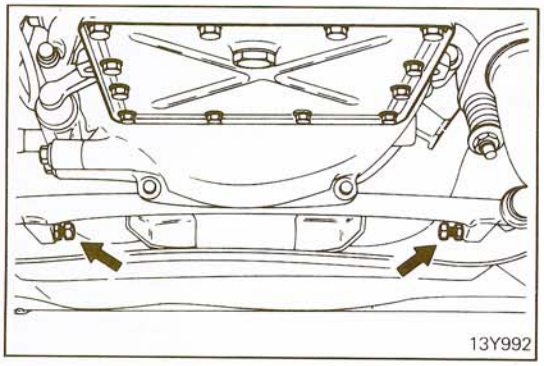

2. Adjust the steering angle of each wheel by turning the stop bolt of the relay rod.

Caution
Be sure that the toe-in is properly adjusted before adjusting the steering angle.

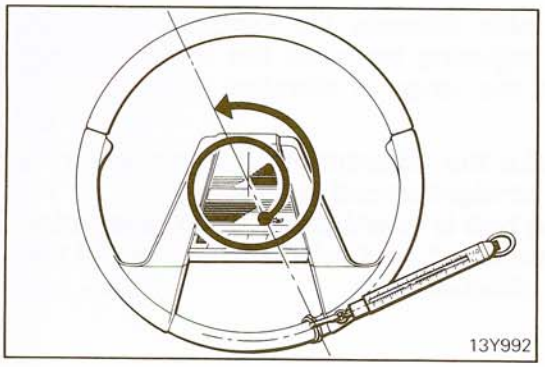

CHECKING STATIONARY STEERING EFFORT N19FFAE

1. Place the vehicle on a level surface and place the steering wheel in the neutral position.
2. Set the engine speed to 1,000 rpm.

Caution
The engine speed should be lowered to the standard (idling) speed after inspection.

3. Measure the tangential force with a spring balance by turning the steering wheel clockwise and counterclockwise one and a half turns.

Standard value: 30 N (6.6 lbs.)

4. If the stationary steering effort exceeds the standard value, check for belt slackness, damage, insufficient oil, air mixed into oil, collapsed or twisted hoses, etc., and repair if found.

CHECKING STEERING WHEEL RETURN TO CENTER

N19FGAD

To check for the return of steering wheel to center, carry out drive test and check the following points.

1. Make gentle and sharp turns and check to get a feel for that there is no appreciable difference in steering effort and return to center between right and left turns.
2. Drive at a speed of about 35 km/h (22 mph), turn the steering wheel 90° clockwise or counterclockwise, and release the wheel one or two seconds later. If the wheel returns more than 70°, the return of steering wheel may be considered good.

   NOTE
   When the steering wheel is turned abruptly, momentary hard steering might result, but this does not mean any problem. It is caused by low oil pump delivery during idling.

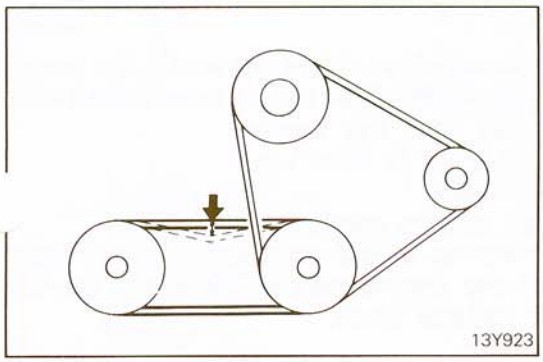

CHECKING DRIVE BELT TENSION

N19FHAE

1. Check the belt for slackness by applying pressure of 100 N (22 lbs.) to the center of the belt.

   Standard value: 9 – 12 mm (0.35 – 0.47 in.)

2. If the measured value does not agree with the standard value, adjust the drive belt tension.

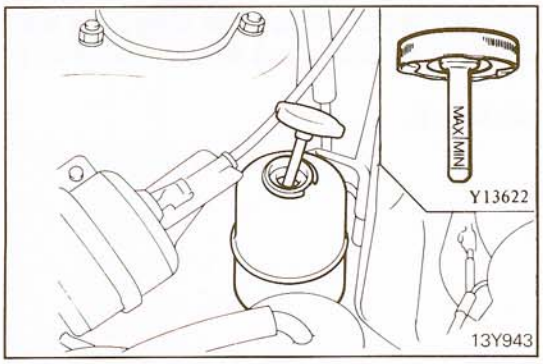

CHECKING FLUID LEVEL

N19FIAH

1. Start the engine on a level surface, and turn the steering wheel several times fully to the right and left while the engine is idling.
2. Check the reservoir for contamination.
3. Replace the fluid if it has bubbles or has become white.
4. Fill the reservoir with specified automatic transmission fluid to the MAX level.

   Specified fluid: Automatic Transmission Fluid DEXRON or DEXRON II type

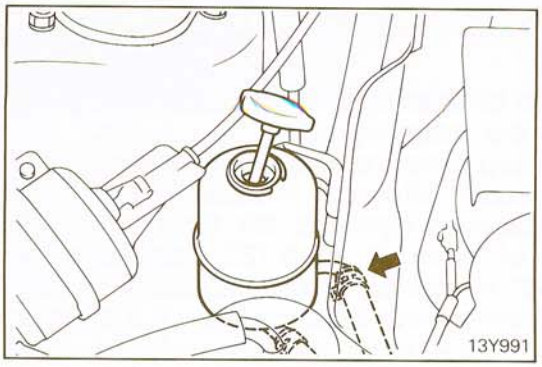

REPLACEMENT OF FLUID

N19FJAH

Check for contamination in the fluid reservoir. Foamy or cloudy fluid should be replaced.

1. Remove the reservoir cap.
2. Disconnect the return hose from the reservoir tank ai remove the fluid.
3. Disconnect the high tension cable. Run the engine intermittently several times with the starter motor, and remove the fluid from the gear box.
4. Attach the return hose and supply the specified fluid.
5. Bleed the system and check the fluid pressure.

Specified fluid: Automatic Transmission Fluid DEXRON or DEXRON II type

AIR BLEEDING

N19FKAE

Check the stationary steering effort. If it is not within the range of the standard value, it is possible that air has been mixed into the system. Bleed the air from the system.

1. Make certain the reservoir is filled up.
2. Jack up the front wheels.
3. Disconnect the high tension cable.
4. While turning the steering wheel completely to the right and to the left, turn the engine over by using the starter motor. Repeat this several times.
5. Lower the front wheels.

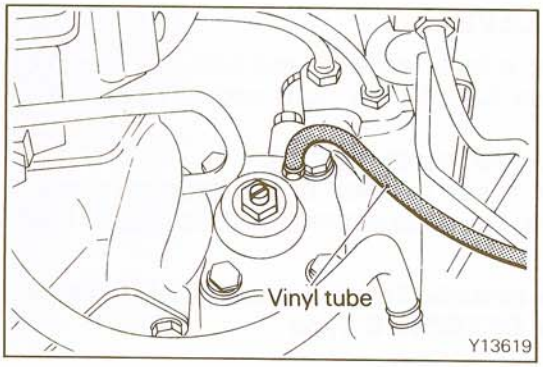

6. Connect one end of a vinyl tube of suitable length to the breather plug of the gear box, and place its other end in a container.
7. Start the engine and idle it.

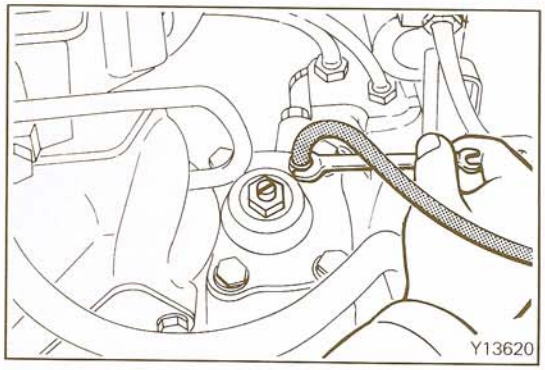

8. Loosen the breather plug, and then turn the steering wheel completely to the right and left continuously until air bubbles no longer appear in the fluid coming out of the tube.
9. After completion of the bleeding, tighten the breather plug.
10. Check the fluid level, and refill if necessary.
11. When turning the steering wheel completely to the right and left, check that the fluid level variation remains less than 4 mm (0.16 in.) at a constant temperature.

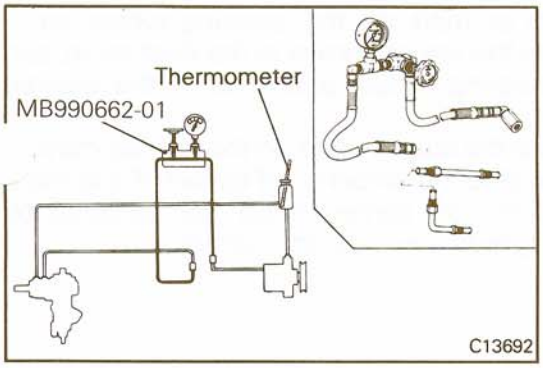

OIL PUMP PRESSURE TEST

N19FLAD

1. Disconnect the pressure hose from the oil pump and install the special tool.

   NOTE
   Use an adapter to connect the special tool to the pump.
2. Bleed the power steering system.
3. Start the engine and operate it until the fluid temperature reaches about 55°C (131°F).
4. Set the engine speed to 1,000 rpm.
5. Completely close the shut-off valve of the special tool to measure the hydraulic pressure.

   Caution
   Do not close the shut-off valve of the special tool for more than 3 seconds.

   Standard value:
   7,500 – 8,200 kPa (1,067 – 1,166 psi)
6. If the hydraulic pressure is not within the range of the standard value, replace the oil pump.
7. Completely open the shut-off valve of the special tool to measure the hydraulic pressure.

   Standard value: 980 kPa (142 psi) or less
   Limit: 1,500 kPa (213 psi)
8. If the hydraulic pressure is not within the range of the standard value, check for a clogged or collapsed oil line, or for a clogged oil line inside the gear box, and repair if found.
9. Completely open the shut-off valve of the special tool and turn the steering wheel completely to the right or left. Then, measure the maximum oil pressure in this condition.

   Standard value:
   7,500 – 8,200 kPa (1,067 – 1,166 psi)
10. If the oil pressure is not within the range of the standard value, the valve of the gear box is faulty, in which case the gear box must be replaced.

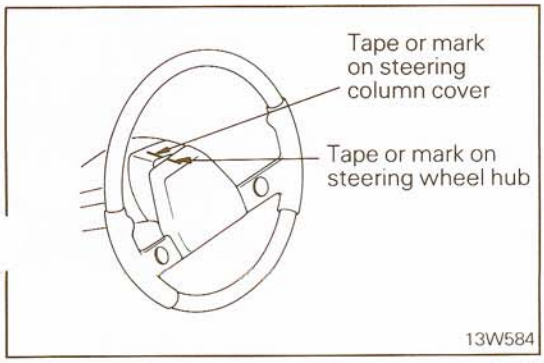

STEERING WHEEL CENTERING

N19FNAD

SIMPLIFIED STEERING WHEEL CENTERING

DETERMINING STEERING WHEEL'S OFF CENTER

1. For the road test, take along chalk or tape and a ruler.
2. Drive straight-ahead on an uncambered level surface.
3. When the vehicle's wheels are pointing straight ahead, mark the steering wheel hub and column cover with a chalk or tape line.
4. Stop the vehicle and line up the marks on the hub and column cover.

STB Revision

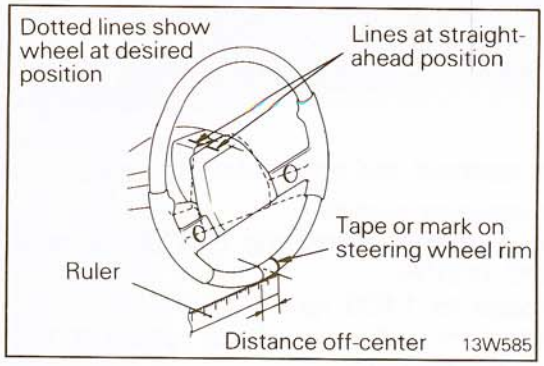

5. Place a tape strip or mark on the steering wheel rim.
6. Hold a ruler next to the rim as shown in the illustration, and then steer the steering wheel until it is in the desired centered position.
7. Record the distance the strip or mark on the rim has move This is how far the steering wheel is off center. If it is mo than 16 mm (5/8 in.) off center, it can be centered by indexing it ten degrees towards the center.

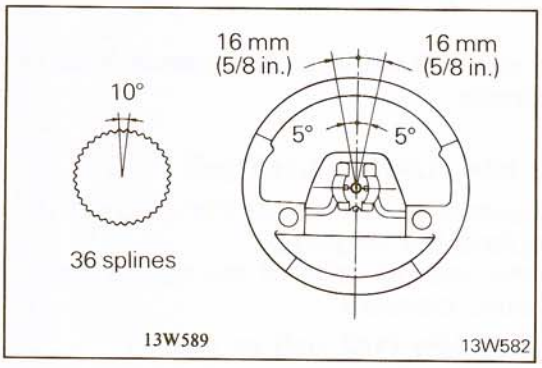

INDEXING STEERING WHEEL TO CENTER IT

The steering wheel shaft has 36 splines, allowing the steering wheel to be indexed in ten-degree increments.

1. Remove the steering wheel.
2. Without disturbing the position of the steering wheel shaft, re-install the wheel as near on-center as possible.

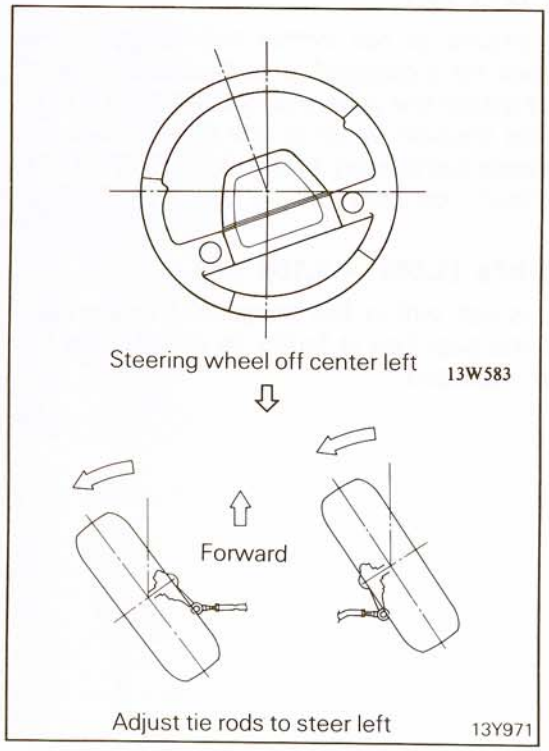

PRECISION STEERING WHEEL CENTERING

In general, the tie rods are adjusted to steer the front wheels in the same direction that the steering wheel is off center. If the steering wheel is off center to the left, center it by adjusting the tie rods to make the front wheels steer toward the left, and vice versa.

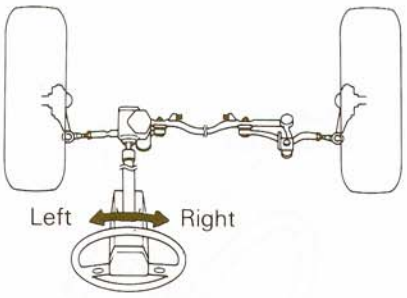

13Y970

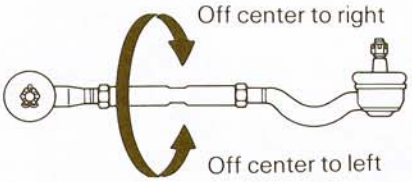

Tie rod viewed from above

1/5 turn of the tie rod
= 2 mm (0.08 in.) toe change
= 2 degrees or 1/4 in. at the steering wheel

13Y972

1. Measure the toe-in.
2. The steering wheel is off center to the left, subtract one millimeter from the measured value down to the specification limit.
   The steering wheel is off center to the right, add one millimeter to the measured value up to the specification limit, as shown in the sample calculation.
   Then adjust the tie rod to change the toe by that number.
3. Hold the tie rod with a wrench while loosening the lock nuts.
4. Turn the tie rod 1/5 turn for each two degrees the steering wheel is off center.
5. Re-check toe-in to be sure the specification is not exceeded.

Sample calculation:
Steering wheel 5° off center to right.
Measured toe-in = 2 mm (0.08 in.)
Maximum toe-in = 5 mm (0.20 in.)
5 mm (0.20 in.) – 2 mm (0.08 in.) = 3 mm (0.12 in.) available for correction
3/2 x 1/5 = 3/10 turn to bring the steering wheel to within 2° of being centered.

STEERING COLUMN AND SHAFT

N19GA--

REMOVAL AND INSTALLATION

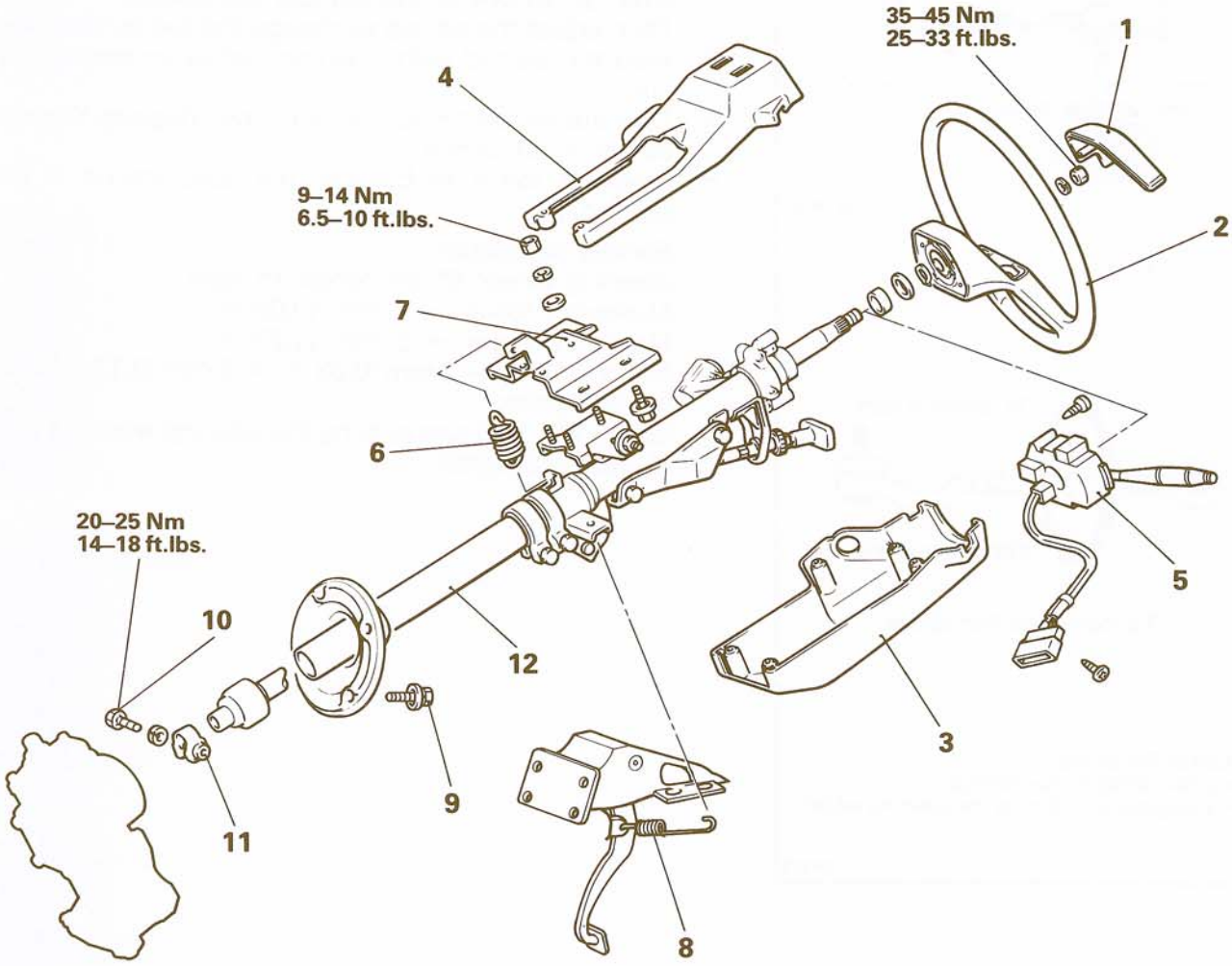

13Y1500

Removal steps

- ◆◆ 1. Horn pad
- ◆◆ ◆◆ 2. Steering wheel
- 3. Lower column cover
- 4. Upper column cover
- 5. Column switch assembly
- 6. Spring
- 7. Steering column support plate
- 8. Brake pedal return spring
- ◆◆ 9. Dash panel cover to dash panel bolt
- 10. Steering shaft to gear box bolt
- ◆◆ 11. Steering shaft clamp
- 12. Steering column assembly

NOTE
(1) Reverse the removal procedures to reinstall.
(2) ◆◆: Refer to "Service Points of Removal".
(3) ◆◆: Refer to "Service Points of Installation".

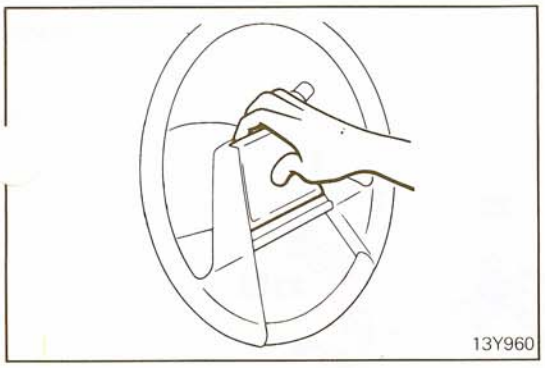

SERVICE POINTS OF REMOVAL N19GBAI

1. REMOVAL OF HORN PAD

Remove the horn pad and disconnect the horn cable connector.

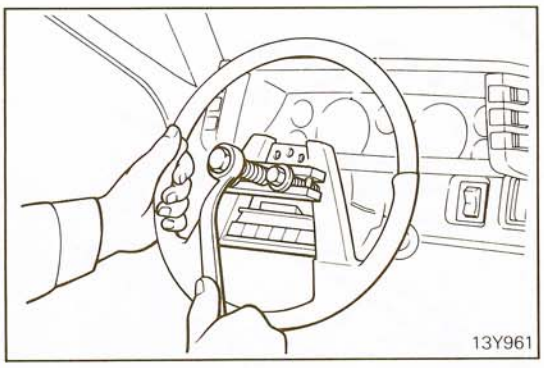

2. REMOVAL OF STEERING WHEEL

Remove the steering wheel.

Caution
Do not hammer on the steering wheel to remove it, or else the collapsible mechanism may be damaged.

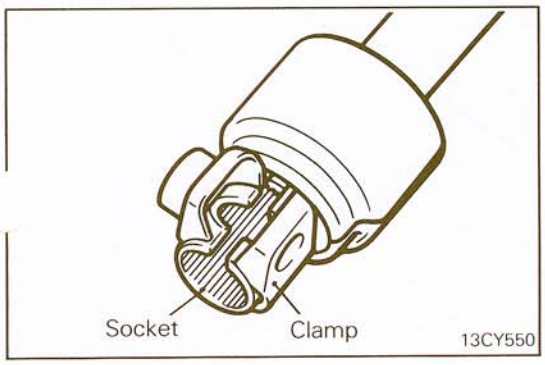

SERVICE POINTS OF INSTALLATION N19GDAG

11. INSTALLATION OF STEERING SHAFT CLAMP

Align the cut of the joint socket with the bolt hole of the clamp.

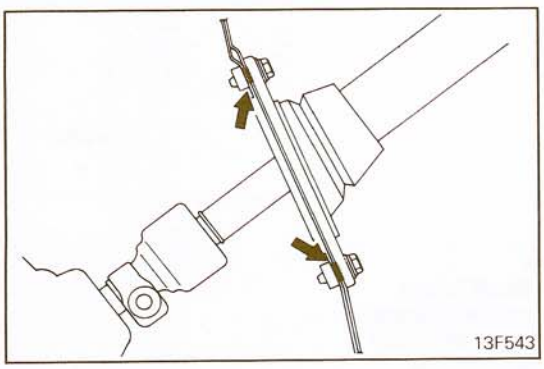

9. INSTALLATION OF DASH PANEL COVER TO DASH PANEL BOLTS

When attaching the dash panel cover, apply specified sealant around the bolt holes.

Specified sealant: 3M All-Around Autobody Sealant 8500 or equivalent

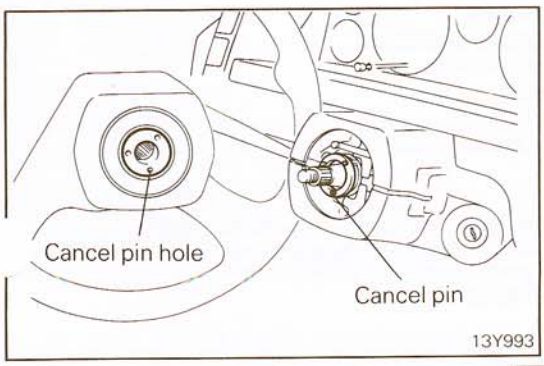

2. INSTALLATION OF STEERING WHEEL

To install the steering wheel, hold the front wheels in the straight-ahead position, fit the three cancel pins into the bottom holes in the steering wheel, and tighten the steering wheel lock nut to the specified torque.

STEERING COLUMN AND SHAFT

N19GE- -

DISASSEMBLY AND REASSEMBLY

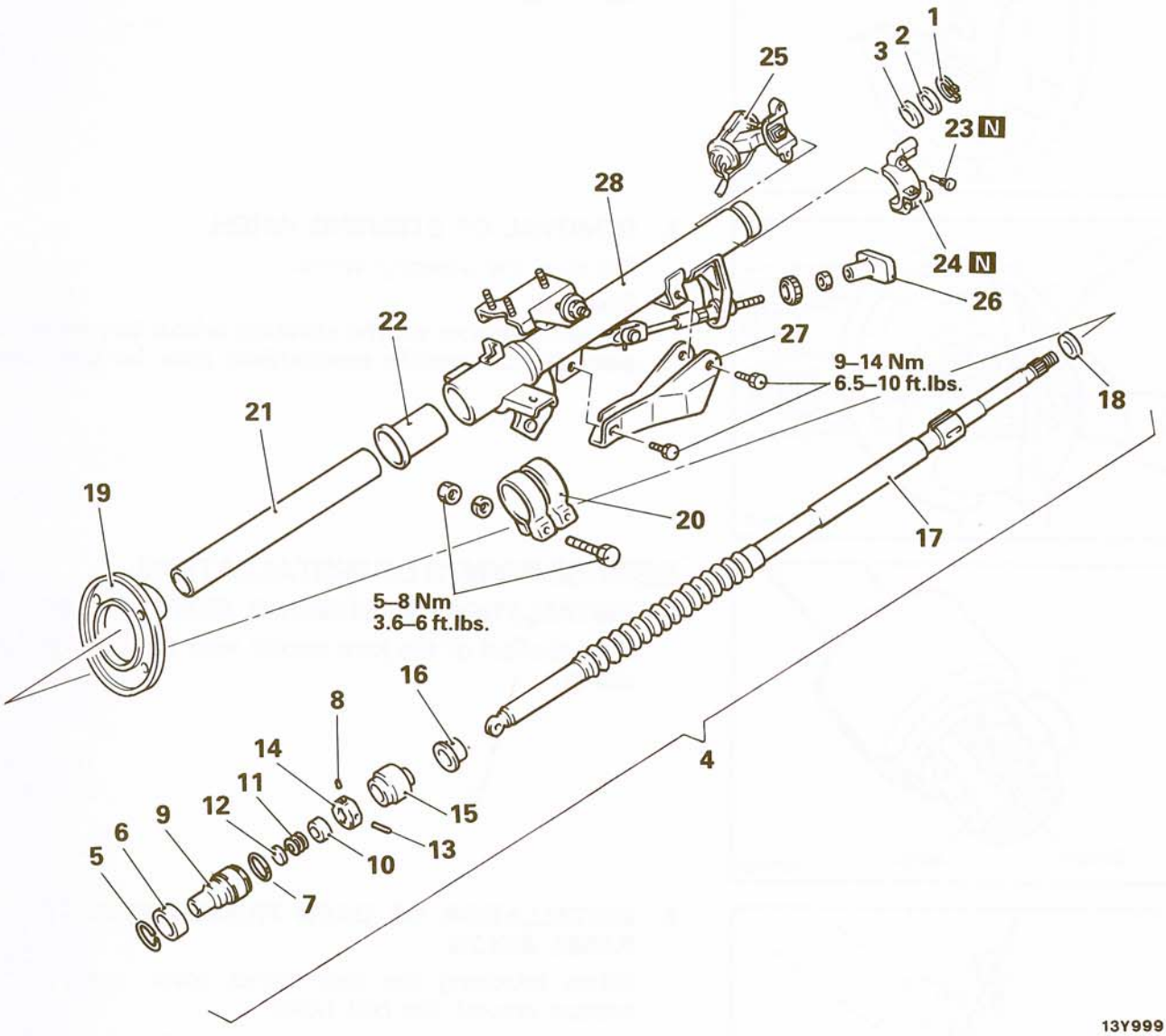

13Y999

Disassembly steps

1. Snap ring
2. Stopper
3. Spacer
4. ◆◆ Steering shaft assembly
5. Stopper
6. ◆◆ ◆◆ Joint pin retainer
7. Stopper
8. ◆◆ ◆◆ Joint pin A
9. ◆◆ Joint socket
10. Spring seat
11. Spring
12. Seat
13. ◆◆ Joint pin B
14. ◆◆ Joint bearing
15. Joint cover
16. ◆◆ Steering shaft bearing
17. Steering shaft
18. Spacer
19. Dash panel cover
20. ◆◆ Column tube clamp
21. Lower column tube
22. Column bushing
23. Special bolt
24. Steering lock bracket
25. ◆◆ ◆◆ Steering lock
26. Tilt knob
27. Tilt link cover
28. Upper column tube

NOTE
(1) Reverse the disassembly procedures to reassemble.
(2) ◆◆: Refer to "Service Points of Disassembly".
(3) ◆◆: Refer to "Service Points of Reassembly".
(4) N: Non-reusable parts

STB Revision

SERVICE POINTS OF DISASSEMBLY N19GFAG

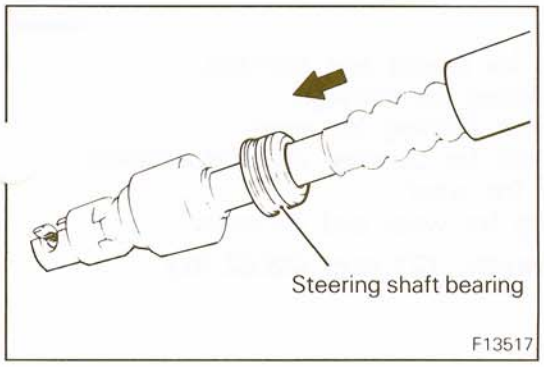

4. REMOVAL OF STEERING SHAFT ASSEMBLY

(1) Take out the steering shaft bearing from the lower column tube.
(2) Remove the snap ring of the upper column shaft with snap ring pliers.
(3) Take out the steering shaft from the column tube.

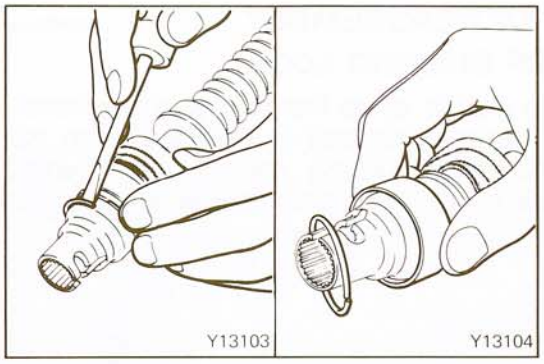

6. REMOVAL OF JOINT PIN RETAINER

(1) Slide off the joint cover from the socket assembly.
(2) Remove the stoppers, and pull out the joint pin retainer.

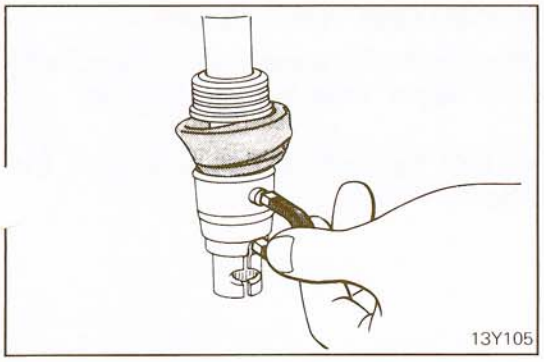

8. REMOVAL OF JOINT PIN A

(1) With the steering shaft set upright, pull out joint pin A on both sides of the socket, by utilizing a magnet, while holding the shaft downward.
(2) Remove the joint socket.

Caution
Be sure to use a magnet to remove joint pin A. Striking the pin with a hammer will make it unremovable.

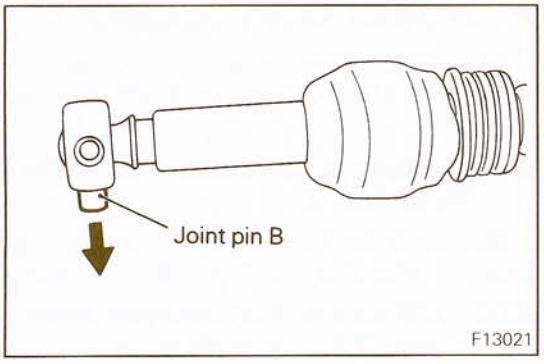

13. REMOVAL OF JOINT PIN B

(1) If necessary, press out joint pin B from the steering shaft and take out the joint bearing.
(2) Take out the joint cover and steering shaft bearing.

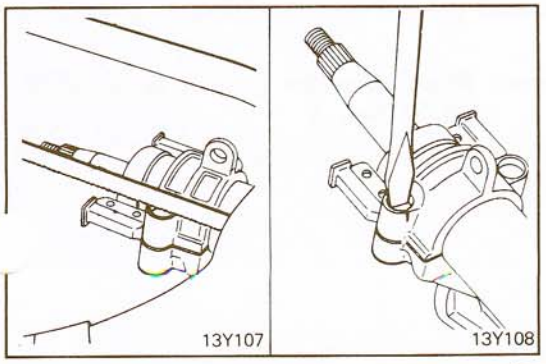

25. REMOVAL OF STEERING LOCK

If it is necessary to remove the steering lock, cut a groove on the head of the special bolt with a metal saw, and remove the steering lock with a screwdriver.

Caution
The steering lock bracket (upper) and bolts should be replaced with new ones without fail when installing the steering lock.

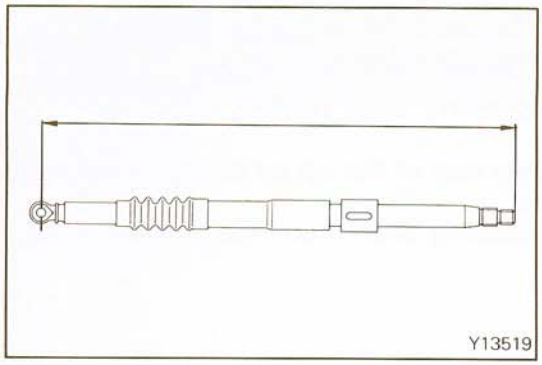
Y13519

INSPECTION

N19GGAG

- Check tilt bracket for cracks and damage.
- Check column bushing for damage.
- Check steering shaft bearing for wear.
- Check steering shaft for damage and deformation.
- Check joint cover for wear.
- Check joint bearing for wear and damage.

Steering shaft length: 727 mm (28.62 in.)

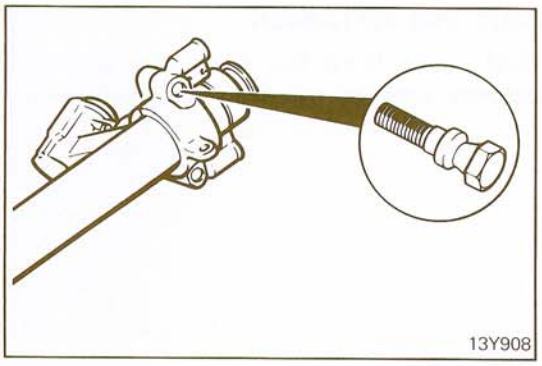
13Y908

SERVICE POINTS OF REASSEMBLY

N19GHAM

25. INSTALLATION OF STEERING LOCK

When the steering lock is to be installed to the column, temporarily install the steering lock in alignment with the column boss, and, after checking that the lock works properly, tighten the special bolts until the heads twist off.

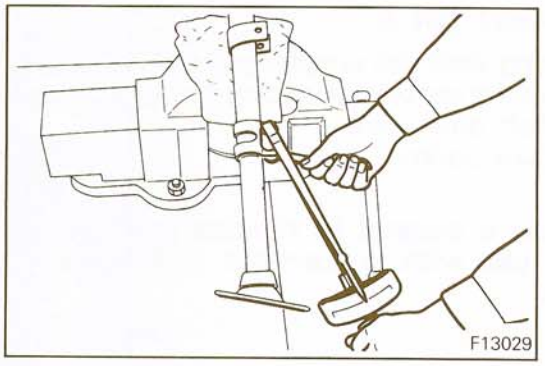
F13029

20. INSTALLATION OF COLUMN TUBE CLAMP

Attach the column bushing to the upper and lower column tubes, and secure the upper tube with the clamp.

NOTE
Install the clamp so that the bolt tightening part of the clamp is at the bottom.

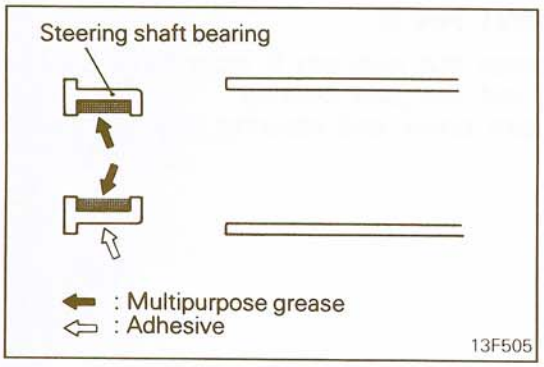

13F505

16. INSTALLATION OF STEERING SHAFT BEARING

(1) Apply the specified grease to the inside of the steering shaft bearing, and then insert the steering shaft into the bearing.

Specified grease: Multipurpose grease SAE J310, NLGI No. 2

(2) Apply specified adhesive to the surface where the steering shaft bearing and the column tube contact.

Specified adhesive: 3M Super Weatherstrip Adhesive 8001 or equivalent

(3) Apply the specified grease to the inside of the upper bearing.

Specified grease: Multipurpose grease SAE J310, NLGI No. 2

(4) Install the steering shaft with the steering shaft bearing in the column tube.

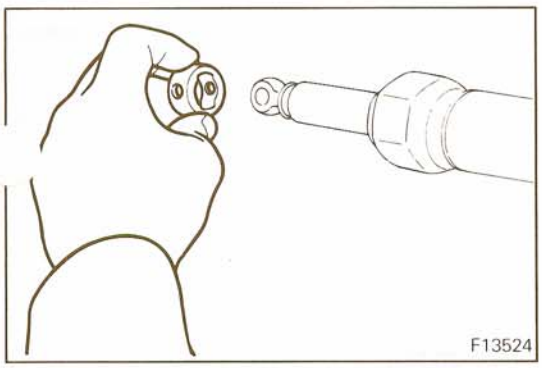

14. INSTALLATION OF JOINT BEARING

(1) Install the joint bearing (with the flanged surface facing upward) on the steering shaft lower end.
(2) Align the joint bearing hole with steering shaft hole.
(3) Apply specified grease to joint pin B and insert in the joint bearing.

Specified grease: Multipurpose grease SAE J310, NLGI No. 2

Caution
Be careful that the pin does not project over the bearing surface.

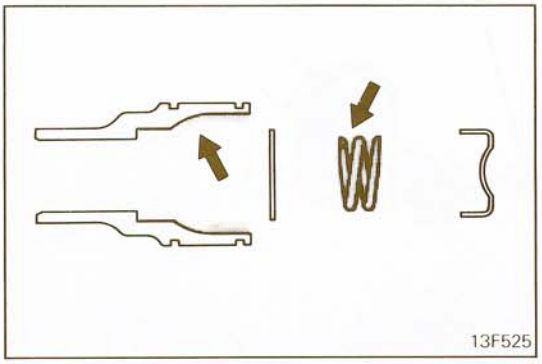

9. INSTALLATION OF JOINT SOCKET

Fill the socket with the specified grease, and then insert the seat, spring and spring seat into it.

Specified grease: Multipurpose grease SAE J310, NLGI No. 2

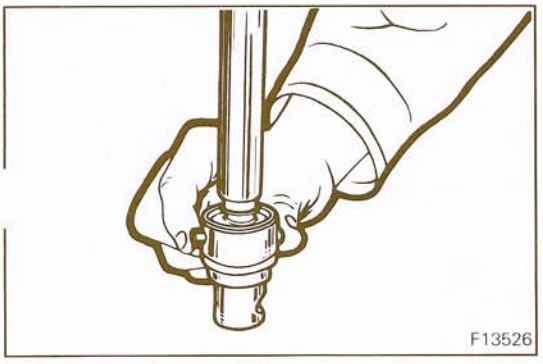

8. INSTALLATION OF JOINT PIN A

(1) Apply specified grease to joint pin A.

Specified grease: Multipurpose grease SAE J310, NLGI No. 2

(2) Insert the steering shaft lower end into the socket, and, while holding the shaft downward, insert joint pin A by hand.

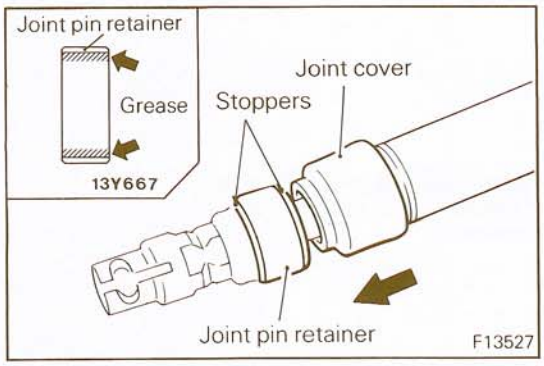

6. INSTALLATION OF JOINT PIN RETAINER

(1) Apply the specified grease to the inside of the joint pin retainer.

Specified grease: Multipurpose grease SAE J310, NLGI No. 2

(2) Attach the joint pin retainer, and secure it with the stoppers.
Cover with the joint cover.

POWER STEERING GEAR BOX

N19NA--

REMOVAL AND INSTALLATION

Pre-removal Operation
- Draining Power Steering Fluid (Refer to P.19-12.)

Post-installation Operation
- Refilling Power Steering Fluid
- Bleeding Gear Box and Pipe Lines (Refer to P.19-12.)

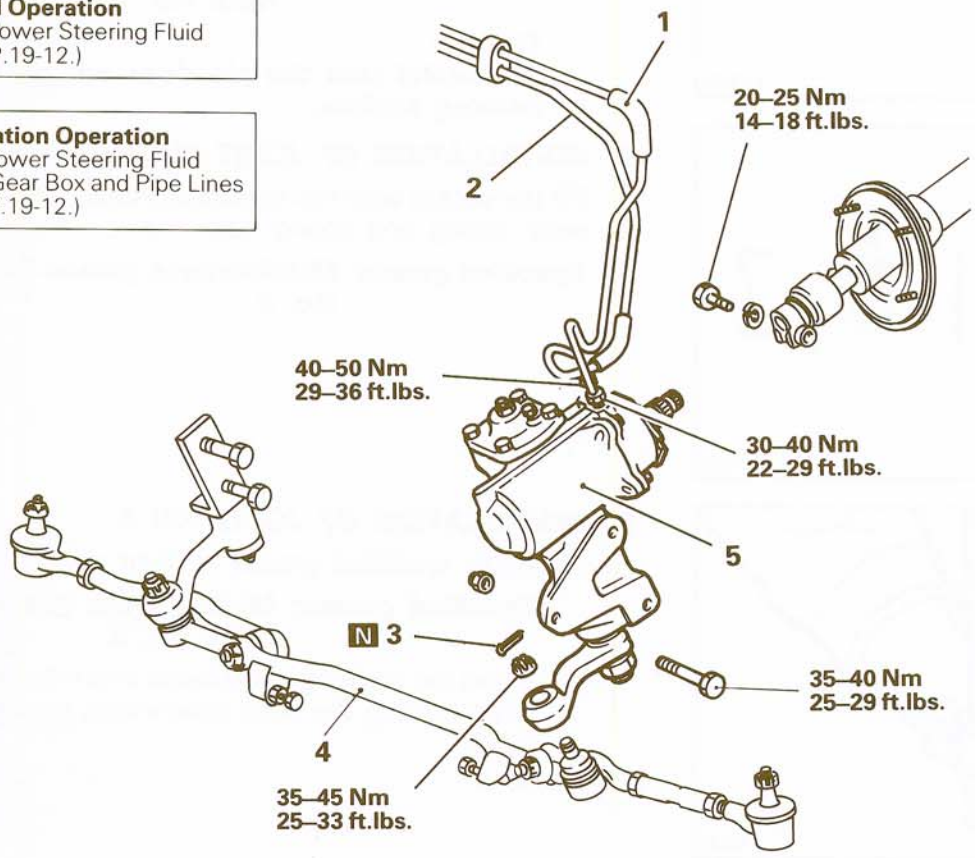

Removal steps

↔ 1. Pressure hose connection
↔ 2. Return hose connection
3. Cotter pin
↔ 4. Relay rod connection
5. Gear box assembly

NOTE
(1) Reverse the removal procedures to reinstall.
(2) ↔: Refer to "Service Points of Removal".
(3) N: Non-reusable parts

13Y979

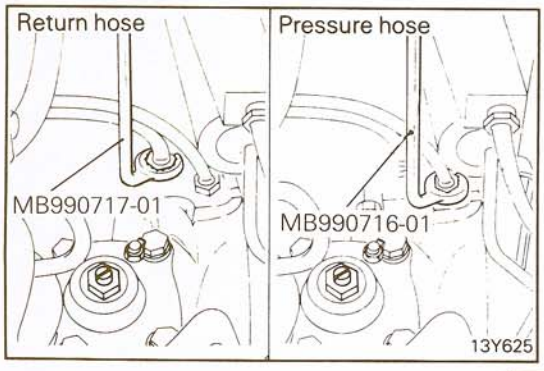

SERVICE POINTS OF REMOVAL

N19NBAE

1. DISCONNECTION OF PRESSURE HOSE / 2. RETURN HOSE

Disconnect the pressure hose and return hose from the gear box by using the special tools.

Caution
Use pieces of cloth to close the end of each hose i order to prevent escape of fluid and entrance of dirt ano other foreign material.

STB Revision

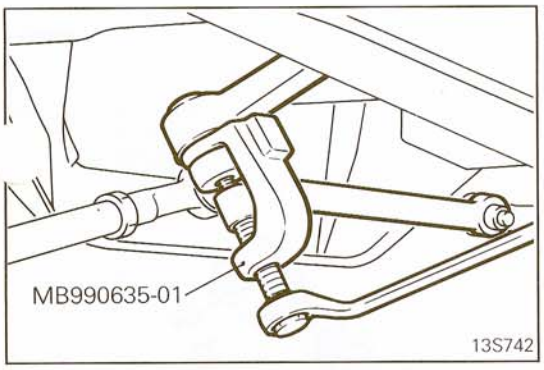

4. DISCONNECTION OF RELAY ROD

Disconnect the pitman arm from the relay rod by using the special tool.

POWER STEERING GEAR BOX

N19NE- -

DISASSEMBLY

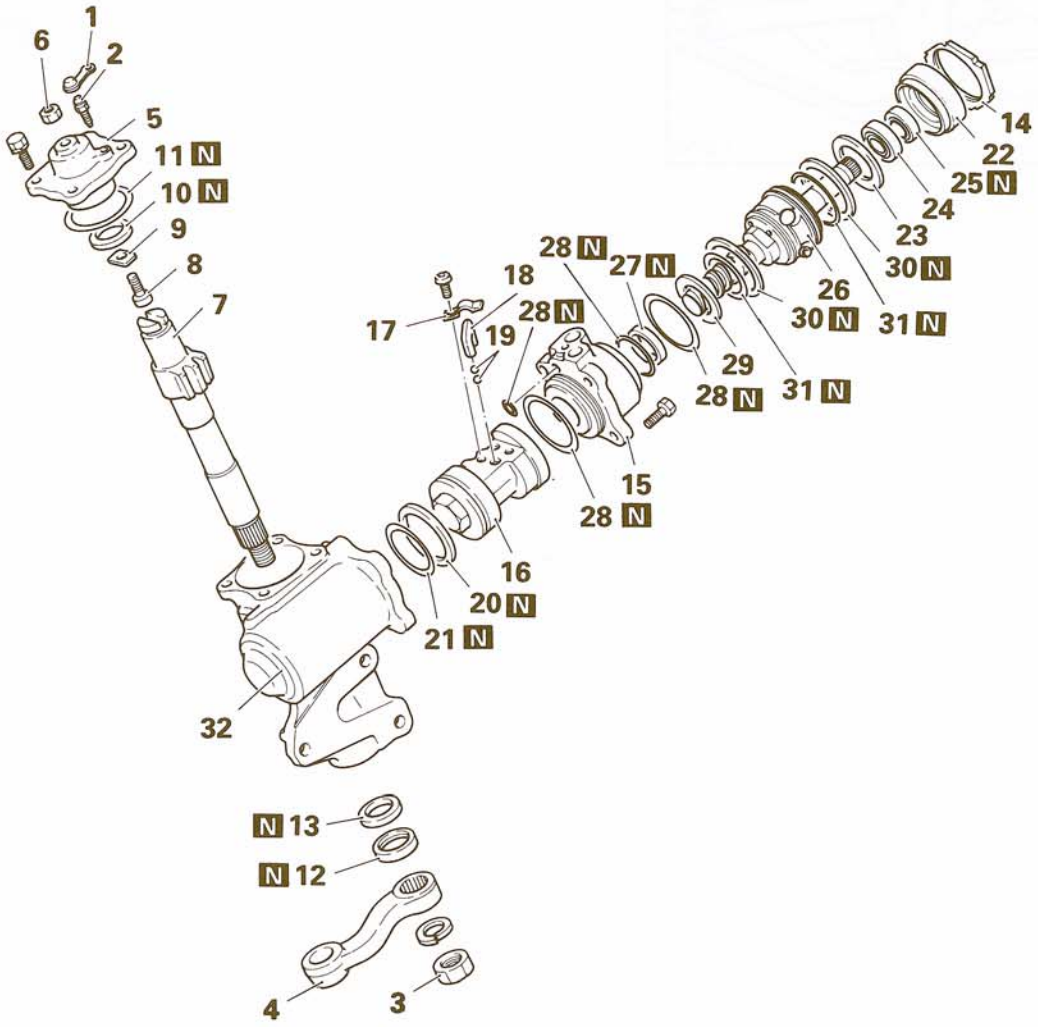

Disassembly steps

1. Breather plug cap
2. Breather plug
3. Jam nut
4. ◆◆ Pitman arm
5. ◆◆ Side cover
6. Lock nut
7. ◆◆ Cross-shaft
8. ◆◆ Adjusting bolt
9. Adjusting plate
10. ◆◆ U-packing (side cover side)
11. O-ring
12. Oil seal
13. U-packing (pitman arm side)
14. ◆◆ Valve housing lock nut
15. ◆◆ Valve housing
16. ◆◆ Rack piston
17. Circulator holder
18. Circulator
19. Balls
20. Seal ring
21. O-ring
22. ◆◆ Top cover
23. Thrust needle bearing
24. ◆◆ Ball bearing
25. ◆◆ Oil seal
26. Mainshaft
27. Seal ring
28. O-ring
29. Thrust needle bearing
30. Seal ring
31. O-ring
32. Gear box housing

NOTE
(1) ◆◆: Refer to "Service Points of Disassembly".
(2) N: Non-reusable parts

13Y980

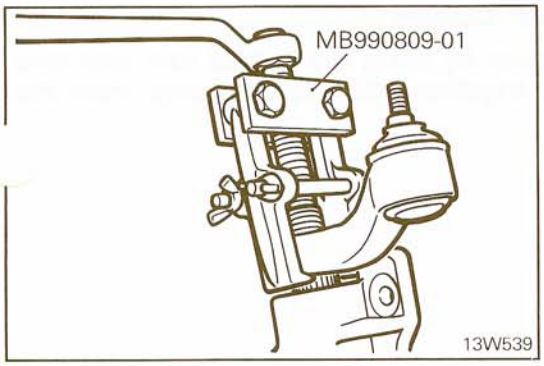

SERVICE POINTS OF DISASSEMBLY N19NFAD

4. REMOVAL OF PITMAN ARM

Remove the pitman arm from the gear box assembly by using the special tool.

5. REMOVAL OF SIDE COVER

Loosen the lock nut of the adjusting bolt and screw in the adjusting bolt so that the side cover may be raised slightly.

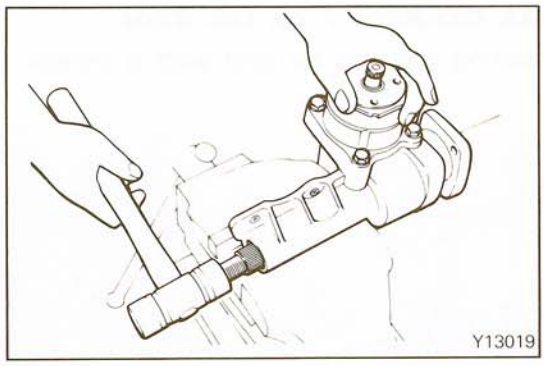

7. REMOVAL OF CROSS-SHAFT

With the mainshaft and cross-shaft placed in the neutral position, tap the bottom of the cross-shaft with a plastic hammer to take out the cross-shaft together with the side cover.

8. REMOVAL OF ADJUSTING BOLT

Remove the side cover by turning the adjusting bolt.

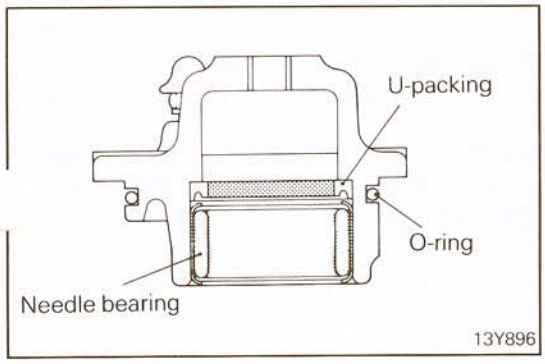

10. REMOVAL OF U-PACKING (SIDE COVER SIDE)

(1) Remove the needle bearing rollers manually from the side cover.
(2) Remove the O-ring and U-packing.

NOTE
Unless there are fluid leaks from the adjusting bolt threads, do not remove the U-packing. If removed, be sure to use new U-packing.

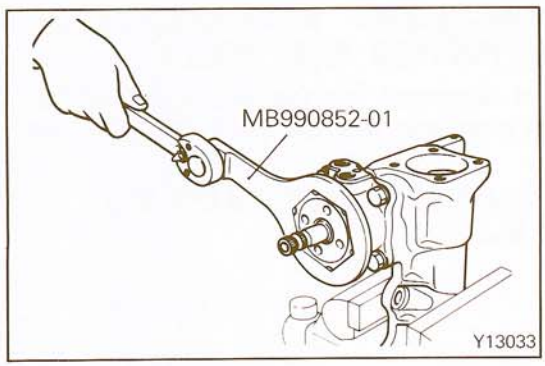

14. REMOVAL OF VALVE HOUSING LOCK NUT

Remove the valve housing lock nut by using the special tool.

15. REMOVAL OF VALVE HOUSING

Remove the valve housing together with the rack piston.

Caution
Use care not to drop the rack piston.

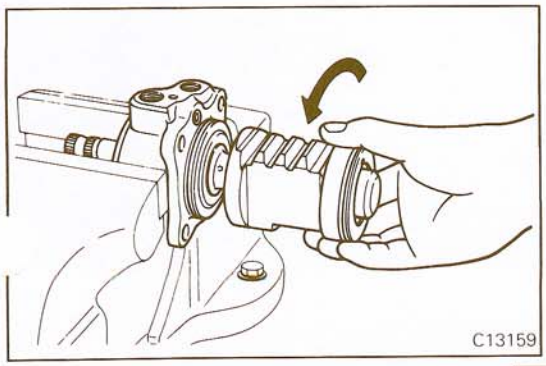

16. REMOVAL OF RACK PISTON

Remove the rack piston from the mainshaft by turning it counterclockwise.

Caution
Be careful not to lose the 26 balls inside the rack piston.

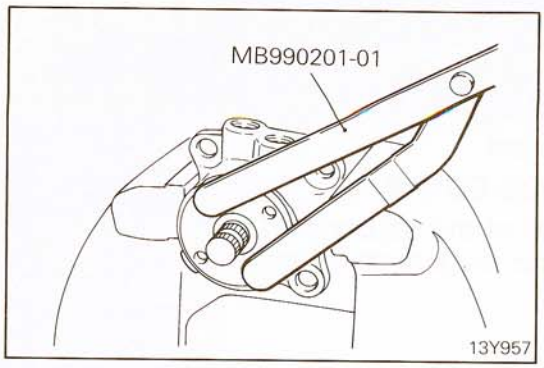

22. REMOVAL OF TOP COVER

Remove the top cover by using the special tool, and take out the mainshaft, together with the top cover, from the valve housing.

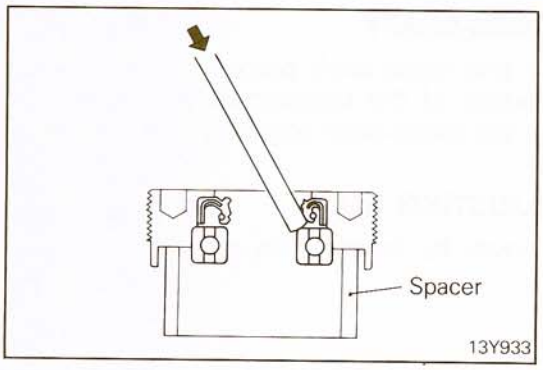

24. REMOVAL OF BALL BEARING / 25. OIL SEAL

Remove the ball bearing and the oil seal with a punch.

INSPECTION

N19NGAB

- Check the mainshaft for wear and damage.
- Check the cross-shaft and rack piston for wear and damage of tooth surface.
- Check the adjusting bolt for uneven wear of contact part.
- Check the dust seal and oil seal for wear and damage
- Check the O-rings for damage.

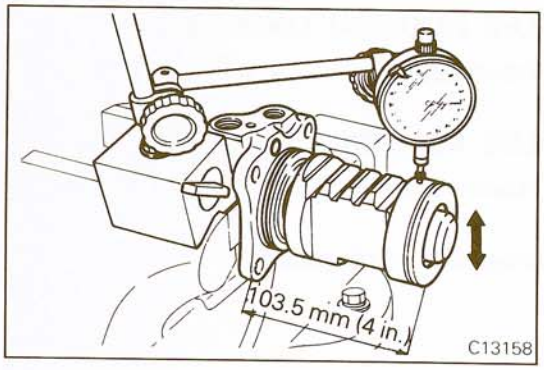

CHECKING OF BACKLASH BETWEEN BALL GROOVE OF RACK PISTON AND BALLS

Before the rack piston is removed, set the rack piston at the illustrated position and measure the backlash using a dial gauge.

Standard value: 0.05 – 0.1 mm (0.002 – 0.004 in.)
Limit: 0.2 mm (0.008 in.)

POWER STEERING GEAR BOX

N19NE--

REASSEMBLY

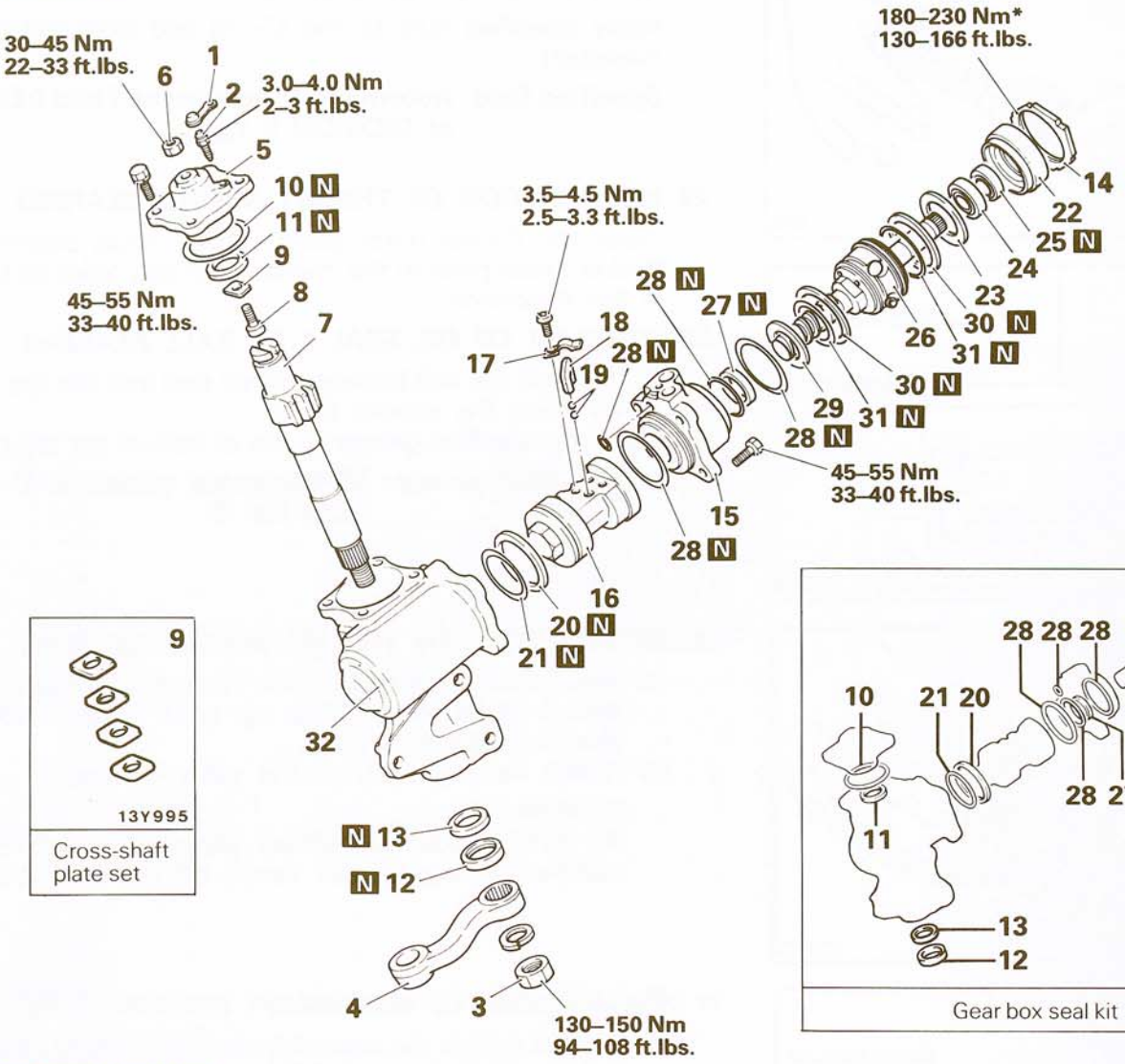

Cross-shaft plate set

Gear box seal kit

Reassembly steps

- 32. Gear box housing
- ◆◆ 31. O-ring
- ◆◆ 30. Seal ring
- ◆◆ 29. Thrust needle bearing
- 28. O-ring
- 27. Seal ring
- 26. Mainshaft
- ◆◆ 25. Oil seal
- ◆◆ 24. Ball bearing
- ◆◆ 23. Thrust needle bearing
- ◆◆ Adjustment of mainshaft starting torque
- 22. Top cover
- 14. Valve housing lock nut
- 21. O-ring
- 20. Seal ring
- ◆◆ 16. Rack piston
- ◆◆ 19. Balls
- 18. Circulator
- 17. Circulator holder
- ◆◆ 13. U-packing (pitman arm)
- ◆◆ 12. Oil seal
- ◆◆ 15. Valve housing
- ◆◆ 11. U-packing (side cover side)
- ◆◆ 10. O-ring
- ◆◆ Adjustment of cross-shaft axial play
- 9. Adjusting plate
- 8. Adjusting bolt
- 7. Cross-shaft
- 6. Lock nut
- ◆◆ 5. Side cover
- ◆◆ Adjustment of mainshaft total starting torque
- ◆◆ 4. Pitman arm
- 3. Jam nut
- 2. Breather plug
- 1. Breather plug cap

NOTE
(1) ◆◆: Refer to "Service Points of Reassembly".
(2) N: Non-reusable parts.
(3) *: If the special tool is used to measure the tightening torque, the measurement is 135 – 175 Nm (98 – 127 ft.lbs.).

13Y980

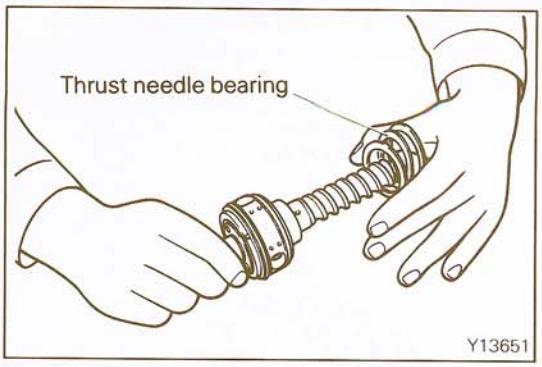

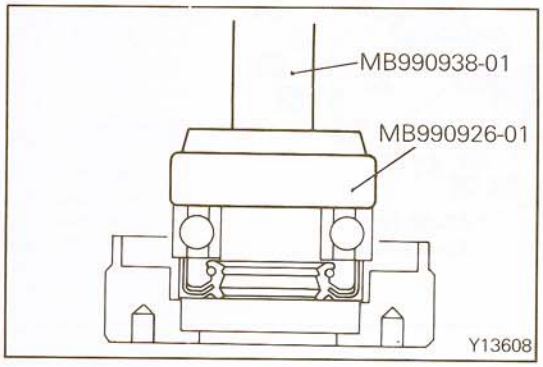

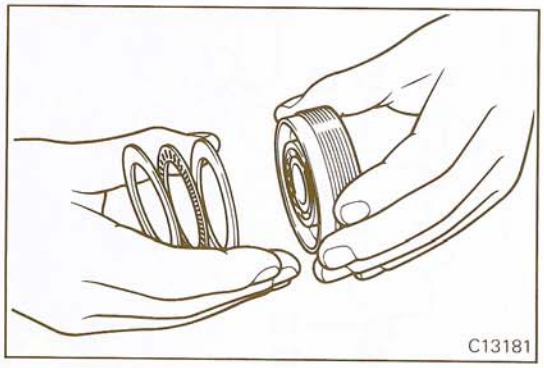

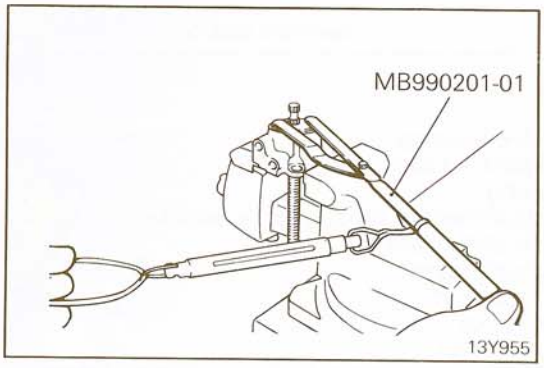

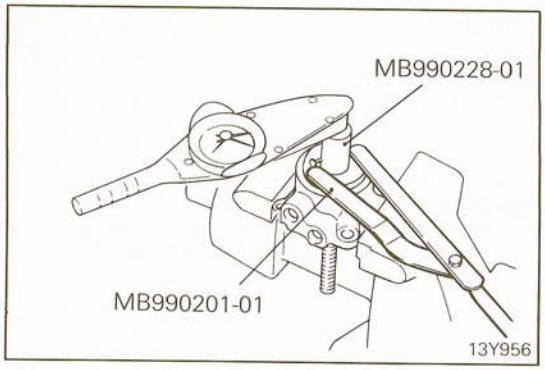

SERVICE POINTS OF REASSEMBLY N19NHAD

31. APPLICATION OF AUTOMATIC TRANSMISSION FLUID TO O-RING / 30. SEAL RING

Apply specified fluid to the O-ring and seal ring of t' mainshaft.

Specified fluid: Automatic Transmission Fluid DEXRON or DEXRON II type

29. INSTALLATION OF THRUST NEEDLE BEARING

Install the thinner thrust plate, thrust needle bearing and thicker thrust plate to the mainshaft in that order as shown in the illustration.

25. PRESS-FIT OF OIL SEAL / 24. BALL BEARING

(1) Press-fit the ball bearing and oil seal into the top cover by using the special tools.
(2) Apply specified grease to the oil seal of the top cover.

Specified grease: Multipurpose grease SAE J310, NLGI No. 2

23. INSTALLATION OF THRUST NEEDLE BEARING

(1) Install the thinner thrust plate, thrust needle bearing and thicker thrust plate to the top cover in that order as shown in the illustration.
(2) Attach the top cover to the valve housing.

Caution
Be careful that the thrust plates and the thrust needle bearing do not come off the top cover.

• ADJUSTMENT OF MAINSHAFT STARTING TORQUE

(1) In order to fit in the assembly parts, use the special tool and a spring balance, and tighten the top cover until the tangent force becomes 62 – 83 N (14 – 19 lbs.). Then return the top cover until the tightening torque is 0 N (0 lbs.).

Caution
After tightening the top cover, rotate the mainshaft to confirm that there is no torque fluctuation or abnormal noise.

(2) Measure the mainshaft starting torque by using the special tools.
(3) Tighten the top cover until the mainshaft starting torque is 20 – 30 Ncm (1.8 – 2.7 in.lbs.) greater than the previously mentioned measurement value.

NOTE
Tighten the top cover gradually while measuring the starting torque.

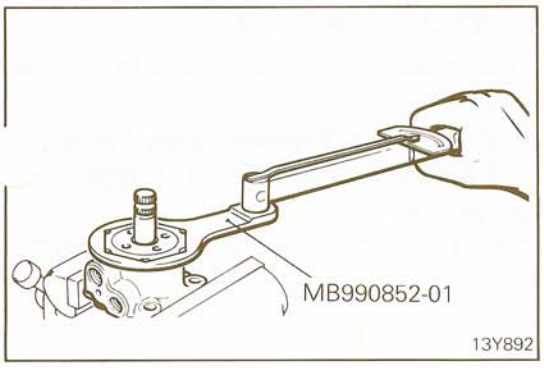

(4) Tighten the valve housing lock nut by using the special tool.

Caution
Be sure that the top cover does not turn together with the lock nut at this time.

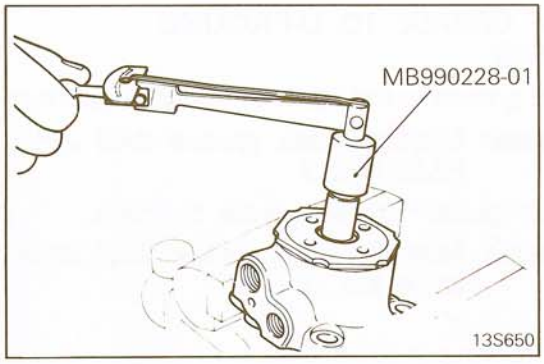

(5) Measure the mainshaft starting torque by using the special tools.

Standard value: 25 – 65 Ncm (2 – 6 in.lbs.)

(6) If the measured mainshaft starting torque does not comply with the standard value, remove the valve housing lock nut and adjust the tightening of the top cover.

16. INSTALLATION OF RACK PISTON

(1) Install the rack piston until it comes in contact with the edge of the mainshaft.
(2) Rotate the mainshaft to align the ball raceway with the ball insertion hole.

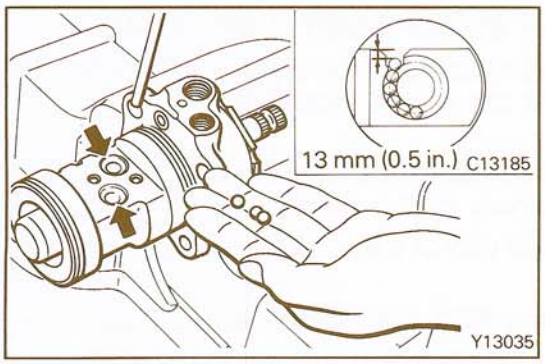

19. INSTALLATION OF BALLS

(1) Insert 19 balls into the ball insertion hole, pushing them gently with a brass bar.

Caution
Do not rotate the rack piston while inserting the balls.

(2) Use slide calipers to measure the distance from the end of each of two holes and the apex of top ball.
(3) If the distance differs from the value shown in the illustration, remove the rack piston and reinsert the 19 balls.
(4) Insert 7 balls into the circulator.

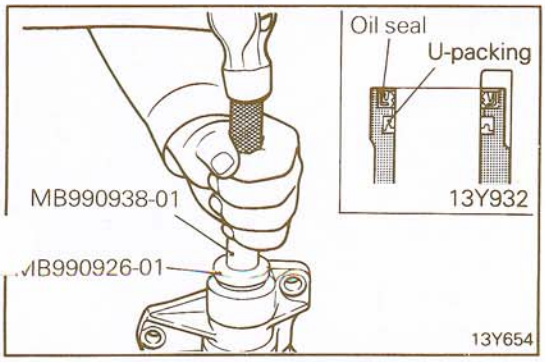

13. INSTALLATION OF U-PACKING (PITMAN ARM) / 12. OIL SEAL

Install the U-packing on the gear box and press-fit the oil seal by using the special tools.

15. INSTALLATION OF VALVE HOUSING

(1) Apply specified automatic transmission fluid to the seal ring of the rack piston.

Specified fluid: Automatic Transmission Fluid DEXRON or DEXRON II type

(2) Install the valve housing.
(3) Rotate the mainshaft until the rack piston moves to the neutral position (center).

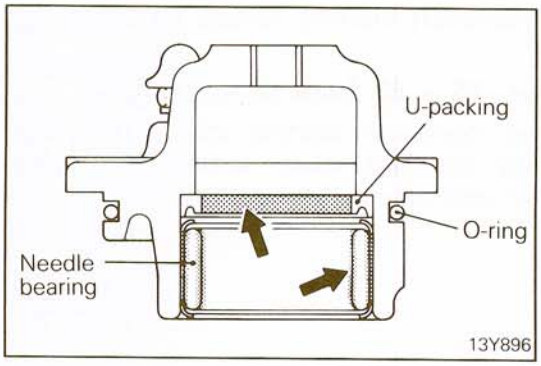

11. APPLICATION OF GREASE TO U-PACKING (SIDE COVER SIDE)

(1) Apply specified grease to the seal surface of U-packing.

Specified grease: Multipurpose grease SAE J310, NLGI No. 2

(2) Apply specified grease to the needle bearings.

Specified grease: Multipurpose grease SAE J310, NLGI No. 2

10. APPLICATION OF AUTOMATIC TRANSMISSION FLUID TO O-RING

Apply specified fluid to the O-ring, and attach it to the side cover.

Specified fluid: Automatic Transmission Fluid DEXRON or DEXRON II type

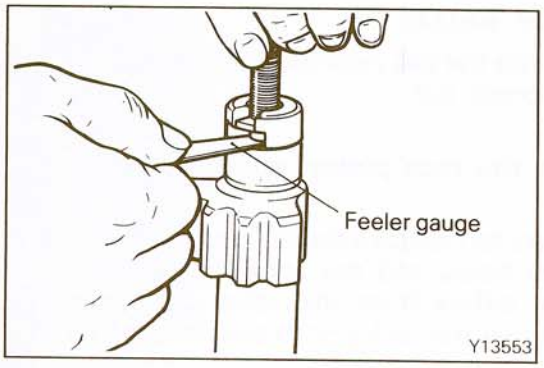

• ADJUSTMENT OF CROSS-SHAFT AXIAL PLAY

(1) Insert the adjusting bolt and the adjusting plate into the T-groove in the top of the cross-shaft.

NOTE
Install the adjusting plate so that the bevelled side faces the contact surface of the cross-shaft.

(2) Measure the axial play of the adjusting bolt with a feeler gauge.

Standard value: 0.05 mm (0.002 in.) or less

(3) If the axial play exceeds the standard value, select a suitable adjusting plate, install it, and then measure the axial play once again.

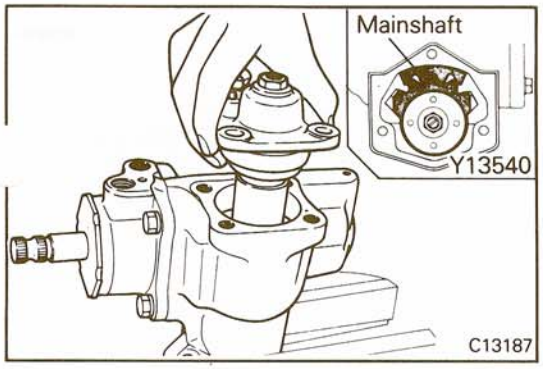

5. INSTALLATION OF SIDE COVER

With the mainshaft in the neutral position, install the side cover assembly (with the cross-shaft) to the gear box.

NOTE
Apply specified automatic transmission fluid to the teeth and shaft areas of the rack piston, and apply specified grease to the oil seal lip.

Specified fluid: Automatic Transmission Fluid DEXRON or DEXRON II type

Specified grease: Multipurpose grease SAE J310, NLGI No. 2

Caution
Do not rotate the side cover during installation.
Take care not to damage the cross-shaft oil seal.

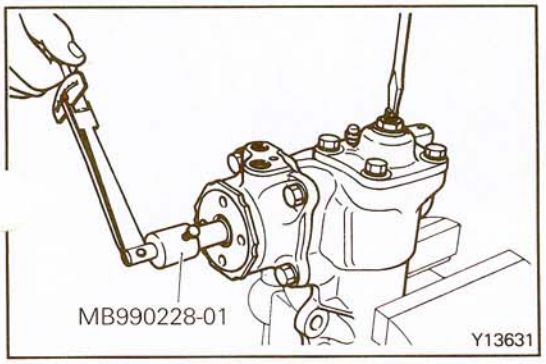

• ADJUSTMENT OF MAINSHAFT TOTAL STARTING TORQUE

(1) While turning the adjusting bolt, measure the mainshaft total starting torque by using the special tools.

Standard value: 50 – 90 Ncm (4 – 8 in.lbs.)

NOTE
Position the mainshaft in the neutral position during measurement.

(2) Tighten the adjusting bolt lock nut.

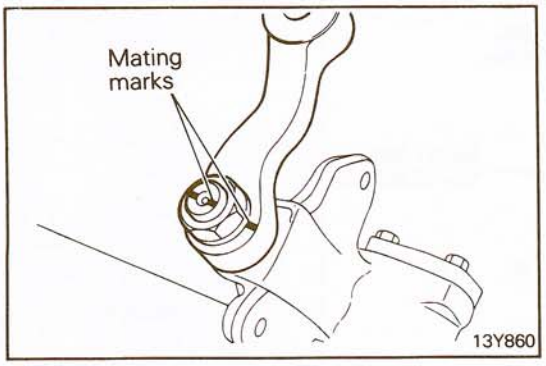

4. INSTALLATION OF PITMAN ARM

Install the pitman arm to the gear box with the mating marks aligned.

OIL PUMP

N19RA- -

REMOVAL AND INSTALLATION

Pre-removal Operation
- Draining Power Steering Fluid (Refer to P.19-12.)

Post-installation Operation
- Refilling Power Steering Fluid
- Bleeding Power Steering Line (Refer to P.19-12.)
- Adjustment of Power Steering Belt Tension (Refer to P.19-12.)

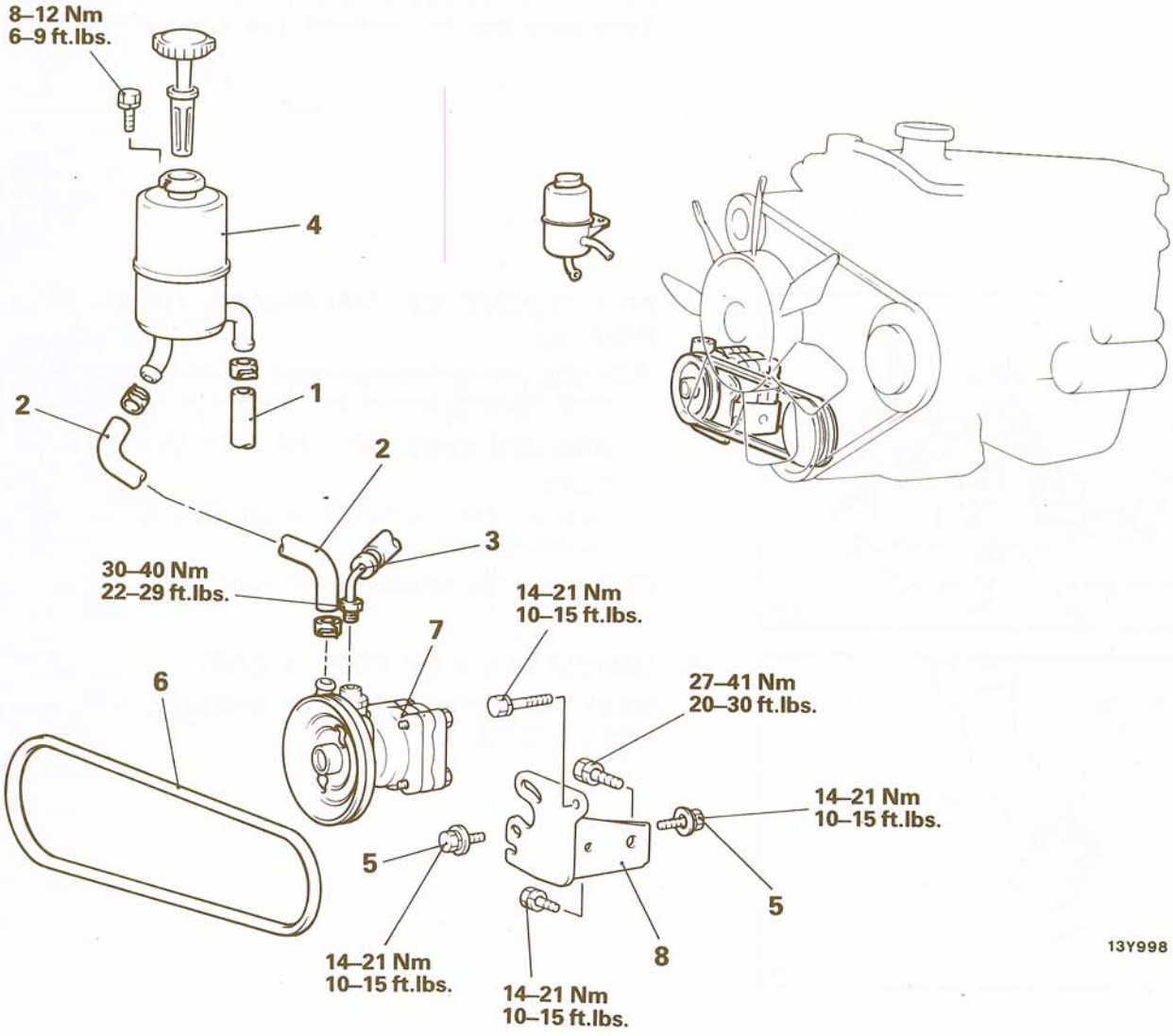

Removal steps

1. Return hose connection
2. Suction hose
3. Pressure hose connection
4. Oil reservoir
5. Bolts
6. V-belt
7. Oil pump
8. Oil pump bracket

NOTE
Reverse the removal procedures to reinstall.

OIL PUMP

N19RE--

DISASSEMBLY AND REASSEMBLY

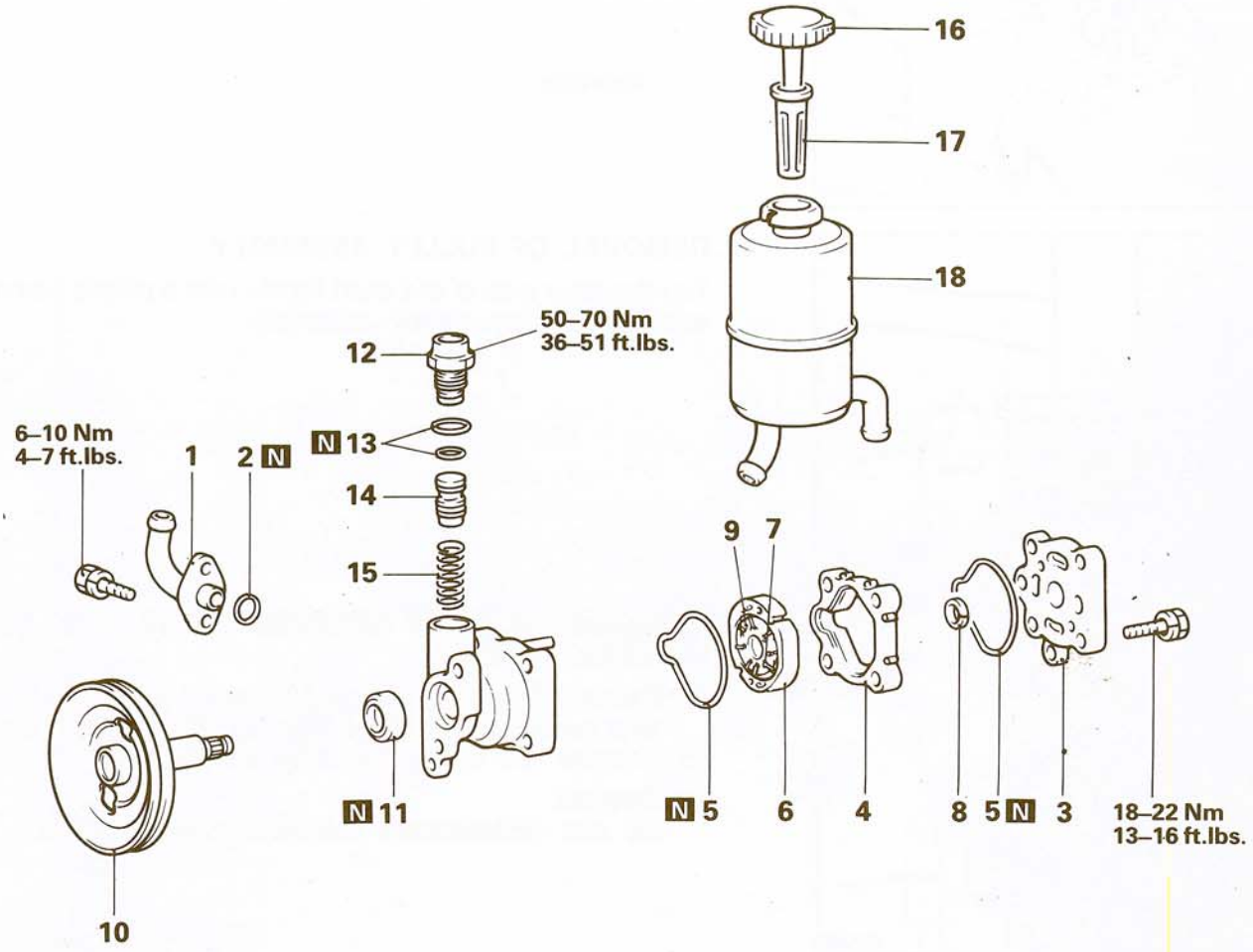

Disassembly steps

1. Suction connector
2. ◆◆ O-ring
3. Oil pump cover
4. Cam case
5. ◆◆ O-rings
6. ◆◆ Cam ring
7. ◆◆ Vanes
8. ◆◆ ◆◆ Snap ring
9. ◆◆ Rotor
10. ◆◆ Pulley assembly
11. ◆◆ Oil seal
12. Connector
13. O-rings
14. ◆◆ Flow control valve
15. ◆◆ Flow control spring
16. Cap
17. Oil filter
18. Oil reservoir

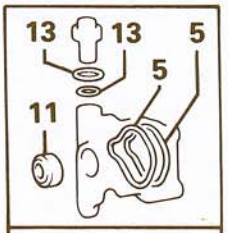

Oil pump seal kit

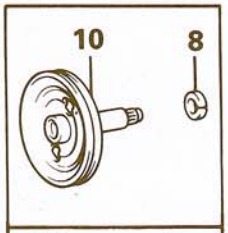

Oil pump pulley and shaft kit

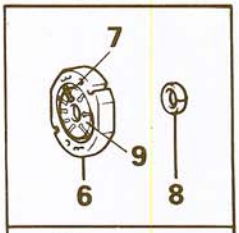

Oil pump cartridge kit

NOTE
(1) Reverse the disassembly procedures to reassemble.
(2) ◆◆: Refer to "Service Points of Disassembly".
(3) ◆◆: Refer to "Service Points of Reassembly".
(4) N: Non-reusable parts.

13Y997

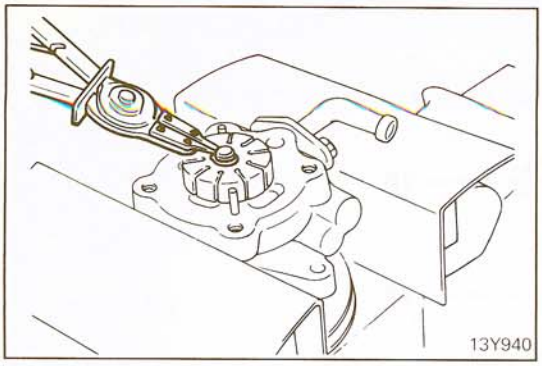

SERVICE POINTS OF DISASSEMBLY N19RFAF

8. REMOVAL OF SNAP RING

Remove the snap ring of the shaft with snap ring pliers, and separate the rotor from the shaft.

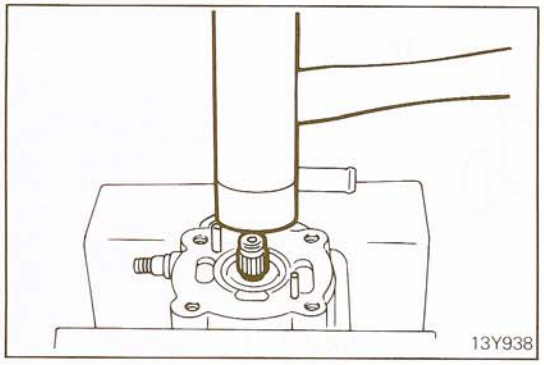

10. REMOVAL OF PULLEY ASSEMBLY

Tap the rotor side of the shaft lightly with a plastic hammer, and take out the pulley assembly.

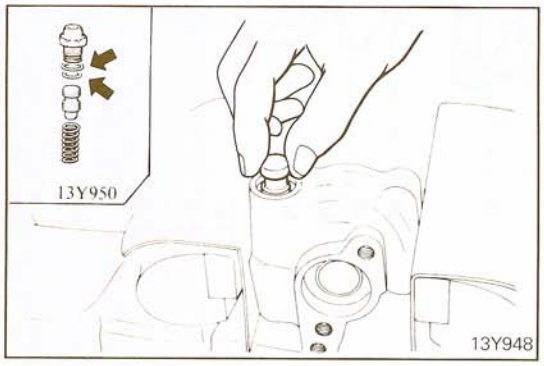

14. REMOVAL OF FLOW CONTROL VALVE / 15. FLOW CONTROL SPRING

(1) Remove the connector from the oil pump body, and take out the flow control valve and flow control spring.
(2) Remove the O-ring from the connector.

Caution
Do not disassemble the flow control valve.

INSPECTION N19RGAE

- Check the flow control valve for clogging.
- Check the shaft for wear and damage.
- Check the V-belt for cracks and wear.
- Check the rotor and vane for "stepped" wear of groove.
- Check the cam ring and vanes for "stepped" wear of contact surface.
- Check the vanes for damage.
- Check the pump body and pump cover with rotor for streak-like abrasion of contact surface.

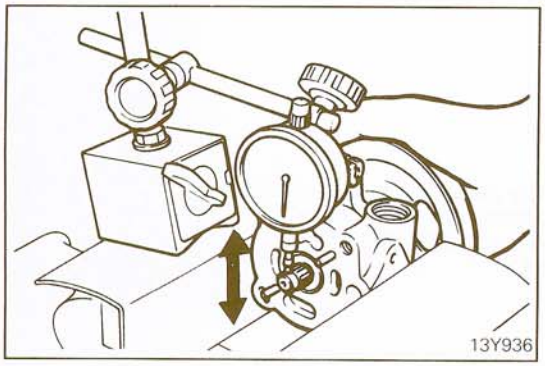

CHECKING OF CLEARANCE BETWEEN SHAFT AND PUMP BODY

Check the clearance between pulley assembly's shaft and the pump body.
(1) Place the dial gauge against the end of the pulley assembly's shaft.
(2) Move the pulley assembly up and down and measure the play.

Limit: 0.2 mm (0.008 in.)

SERVICE POINTS OF REASSEMBLY N19RHAJ

11. INSTALLATION OF OIL SEAL

Drive the oil seal into the pump body with the special tools.

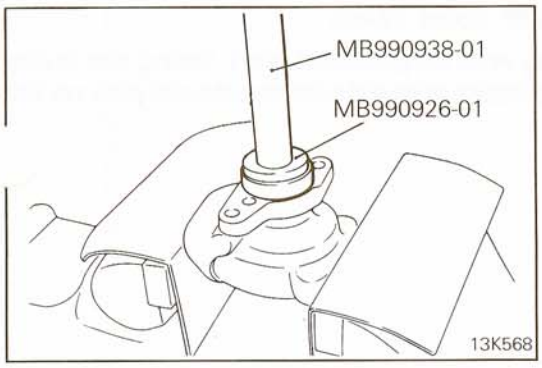

9. INSTALLATION OF ROTOR

(1) Mount the rotor onto the shaft.
(2) When installing the rotor, the countersunk part (shown in the illustration) should face the pump cover side.

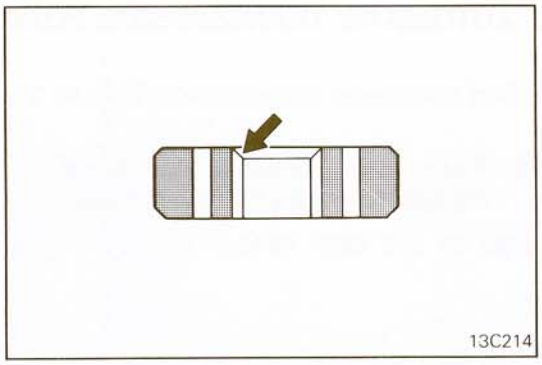

8. INSTALLATION OF SNAP RING

(1) Install the snap ring with the special tool as illustrated.

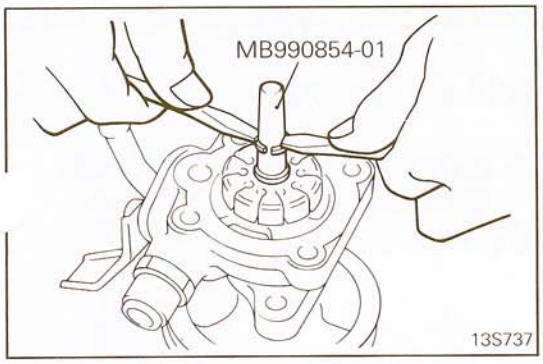

(2) Lift the rotor and check to be sure that the snap ring has entered the countersunk part.

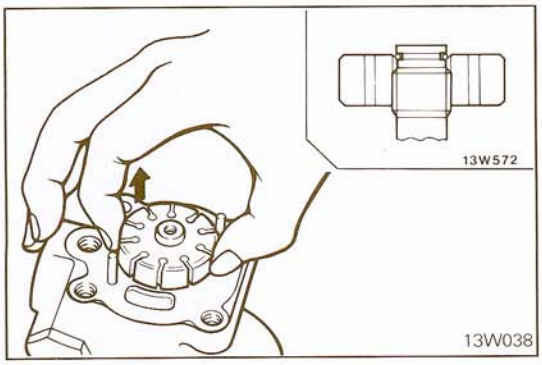

7. INSTALLATION OF VANE

(1) Apply the specified automatic transmission fluid to the vanes.

Specified fluid: Automatic Transmission Fluid DEXRON or DEXRON II type

(2) Install the vanes on the rotor paying close attention to the installation direction.

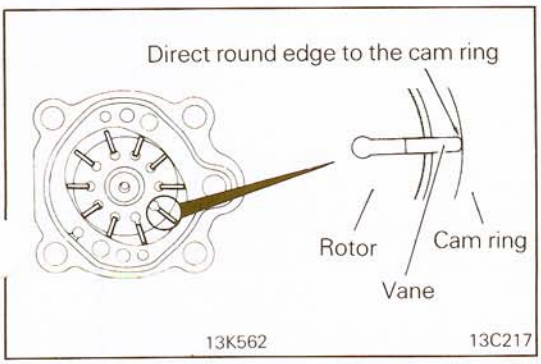

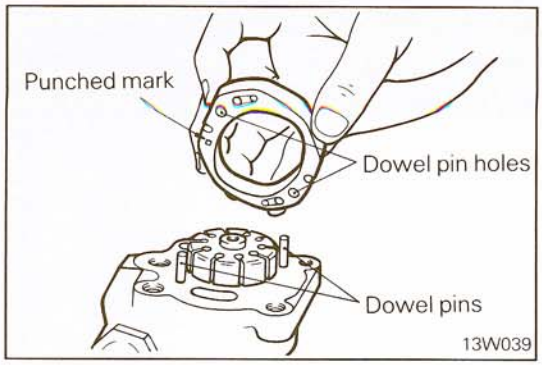

6. INSTALLATION OF CAM RING

Install the cam ring with its punched mark facing the pump body and its dowel holes aligned with the dowel pins on the pump body.

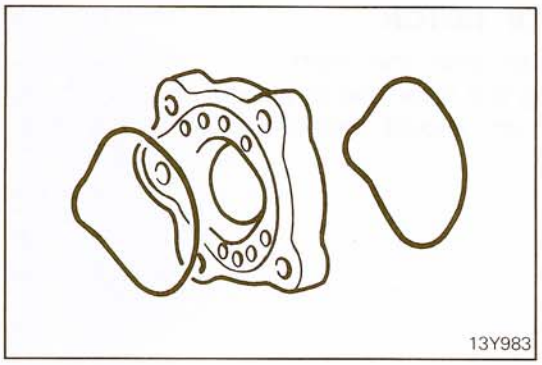

5. APPLICATION OF AUTOMATIC TRANSMISSION FLUID TO O-RINGS

(1) Apply the specified automatic transmission fluid to the O-rings.

Specified fluid: Automatic Transmission Fluid DEXRON or DEXRON II type

(2) Install the O-rings to the cam case.

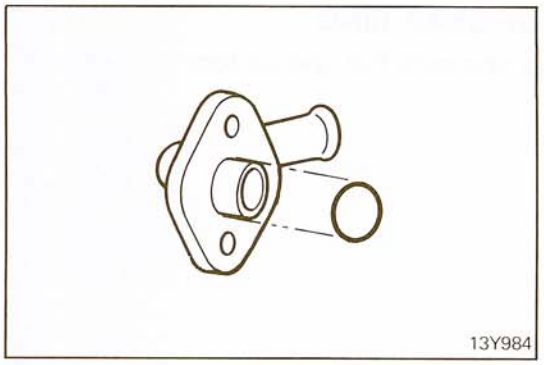

2. APPLICATION OF AUTOMATIC TRANSMISSION FLUID TO O-RING

(1) Apply the specified automatic transmission fluid to the O-ring.

Specified fluid: Automatic Transmission Fluid DEXRON or DEXRON II type

(2) Mount the O-ring onto the suction connector.

STEERING HOSES

N19TA--

REMOVAL AND INSTALLATION

Pre-removal Operation
- Draining Power Steering Fluid (Refer to P.19-12.)

Post-installation Operation
- Refilling Power Steering Fluid
- Bleeding Power Steering Line (Refer to P.19-12.)

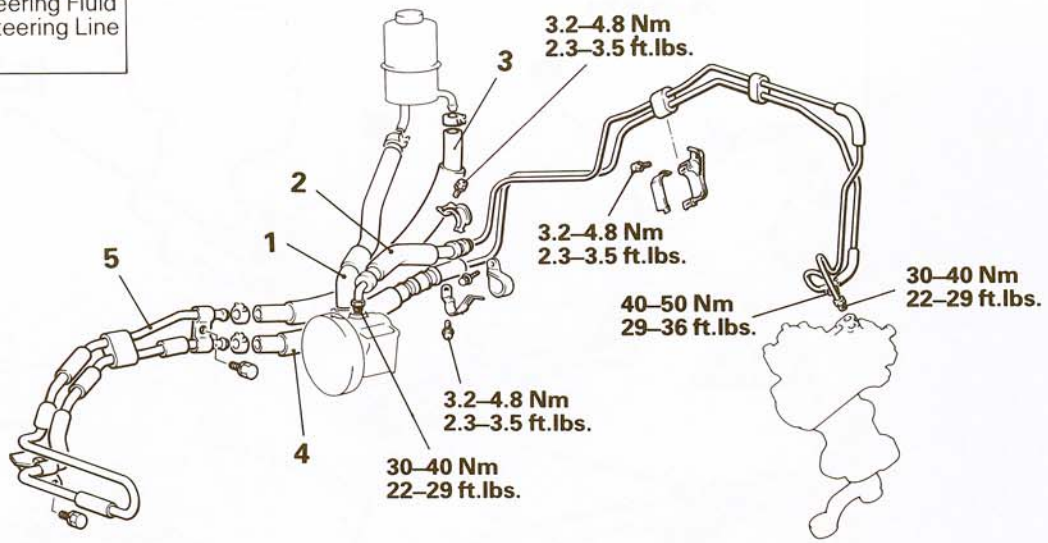

Removal steps

1. Suction hose
2. Pressure hose
3. Return hose
4. Return hose
5. Cooler tube

NOTE
Reverse the removal procedures to reinstall.

13Y963

STEERING LINKAGE

N19VA--

REMOVAL AND INSTALLATION

Post-installation Operation
- Adjustment of Toe-in
  (Refer to GROUP 2 FRONT SUSPENSION – Service Adjustment Procedures.)

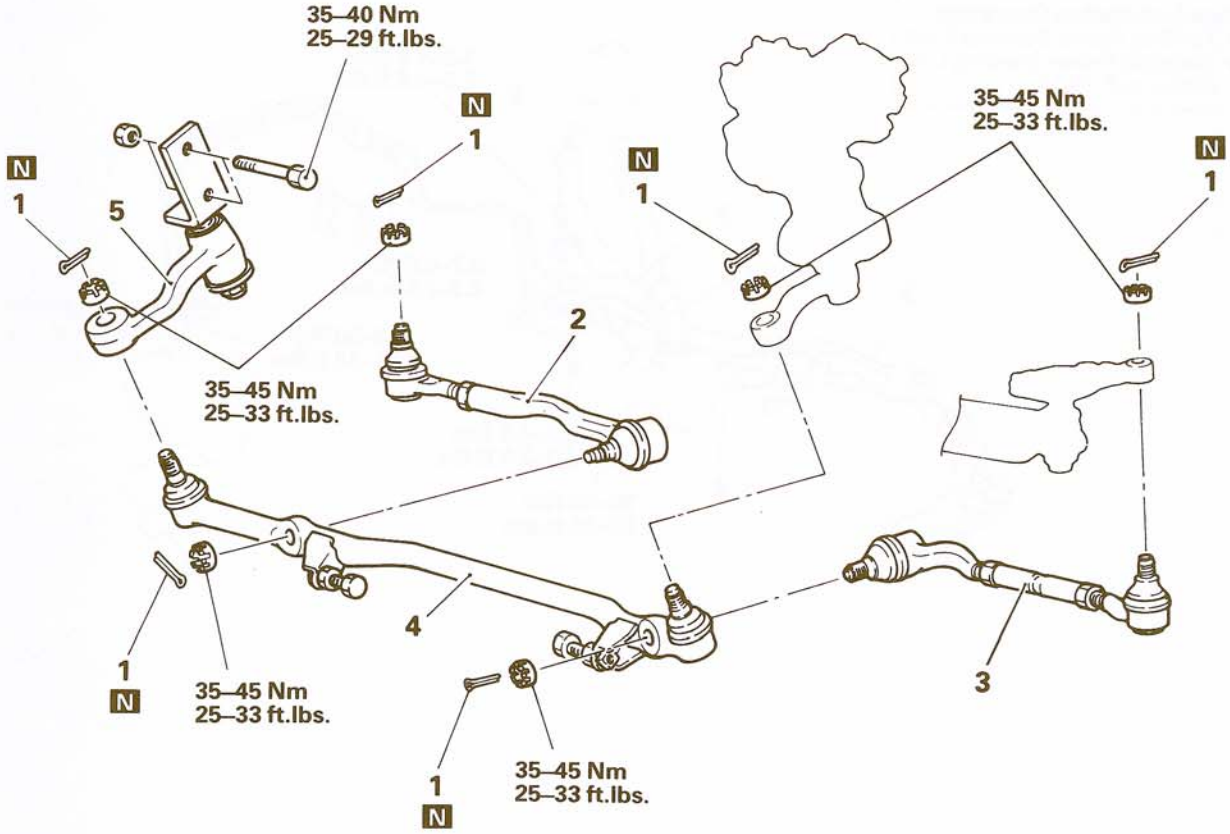

Removal steps

1. Cotter pin
2. ◆◆ Tie rod assembly, right
3. ◆◆ Tie rod assembly, left
4. ◆◆ Relay rod
5. ◆◆ Idler arm assembly

NOTE
(1) Reverse the removal procedures to reinstall.
(2) ◆◆: Refer to "Service Points of Removal".
(3) N: Non-reusable parts

13Y987

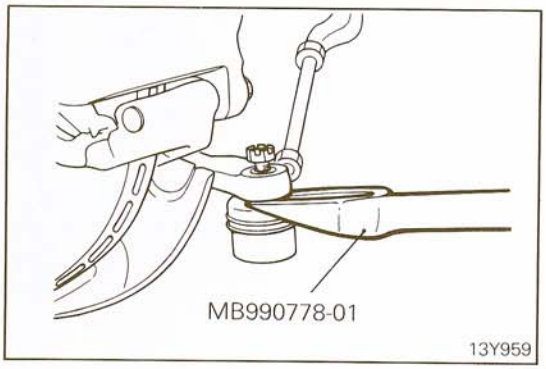

13Y959

SERVICE POINTS OF REMOVAL

N19VBAD

2. DISCONNECTION OF TIE ROD ASSEMBLY, RIGHT / 3. TIE ROD ASSEMBLY, LEFT / 4. RELAY ROD / 5. IDLER ARM ASSEMBLY

Disconnect each linkage by using the special tool.

Caution
Do not remove the ball joint nut but simply loosen

STB Revision

STEERING LINKAGE

N19VG--

DISASSEMBLY AND REASSEMBLY

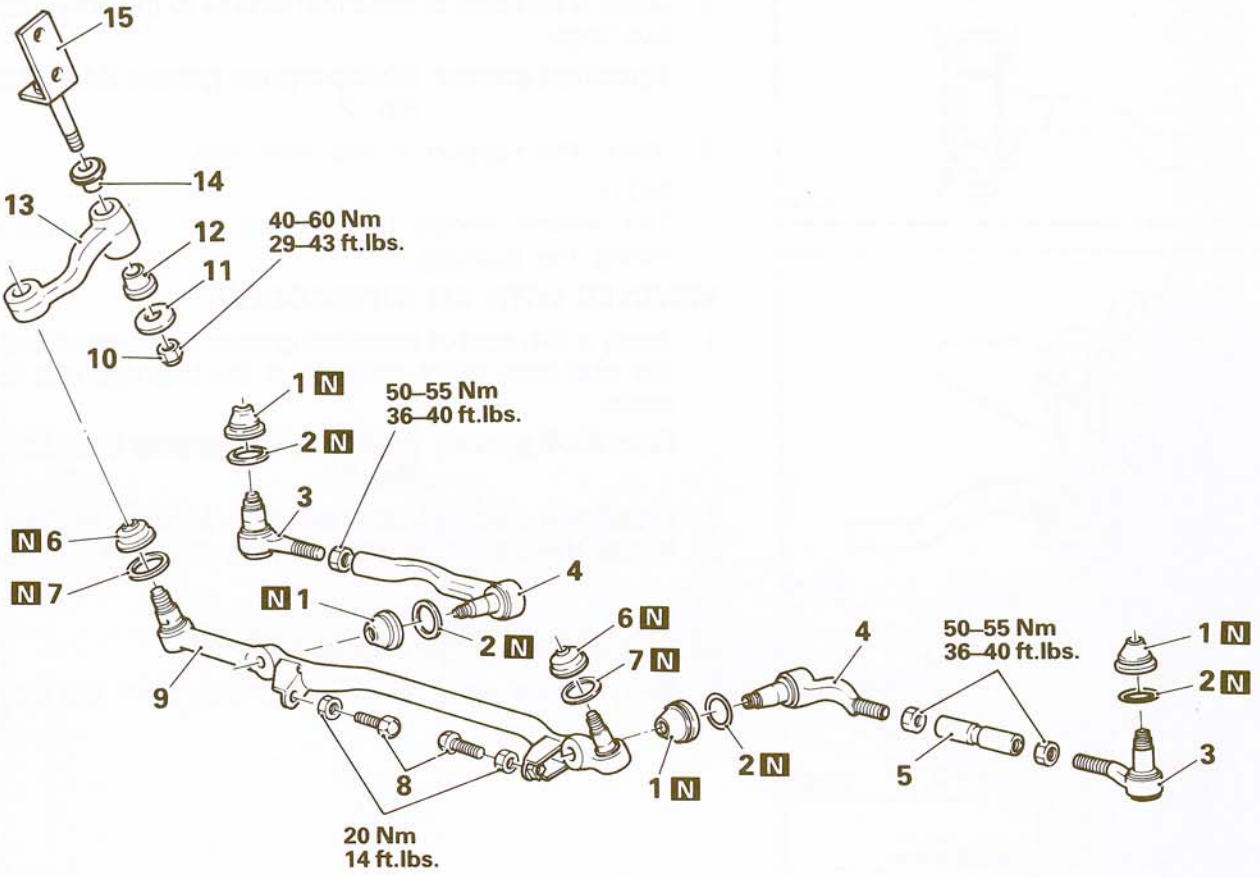

Tie rod assembly disassembly steps

- ◆◆ Measurement of tie rod end ball joint starting torque
1. Dust cover
2. O-ring
- ◆◆ 3. Tie rod outer end
- ◆◆ 4. Tie rod inner end
- ◆◆ 5. Tie rod

Relay rod disassembly steps

6. Dust cover
7. O-ring
8. Stopper bolts
9. Relay rod

Idler arm disassembly steps

- ◆◆ Measurement of idler arm starting torque
10. Idler arm attaching nut
11. Washer
12. Bushing
13. Idler arm
14. Bushing
15. Idler arm support

NOTE
(1) Reverse the disassembly procedures to reassemble.
(2) ◆◆: Refer to "Service Points of Reassembly".
(3) N: Non-reusable parts

13Y989

INSPECTION

N19VHAA

- Check the idler arm support for damage and deformation.
- Check the idler arm for damage and deformation.
- Check the idler arm bushings for wear and cracks.
- Check the dust covers and O-rings for damage and cracks.
- Check the tie rods for damage and deformation.
- Check the relay rod for bends and damage.

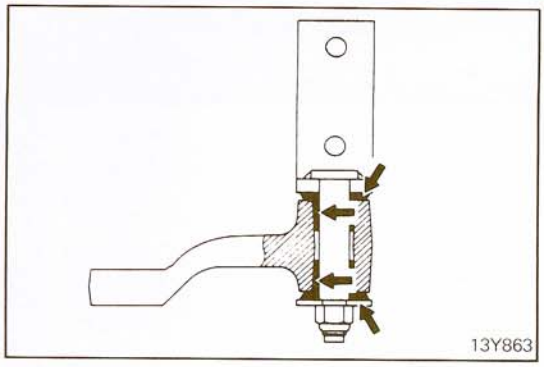

REPLACEMENT OF IDLER ARM BUSHING N19VFAD

VEHICLES WITHOUT AN INTERCOOLER

1. Insert the bushings into the idler arm.
2. Apply a thin coat of specified grease to the arm support a bushings.

   Specified grease: Multipurpose grease SAE J310, NLGI No. 2

3. Insert the support in the idler arm.

   NOTE
   The washer should be installed with its knurled surface facing the bushing.

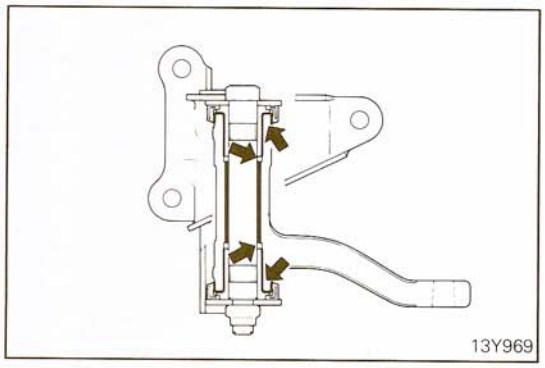

VEHICLES WITH AN INTERCOOLER

1. Apply a thin coat of specified grease to the inner surfaces of the idler arm, outer surfaces of the bearings and lips of oil seals.

   Specified grease: Multipurpose grease SAE J310, NLGI No. 2

2. Install the bearings and oil seals to the idler arm.
3. Install the idler arm assembly to the idler arm support.

REPLACEMENT OF DUST COVER N19VEAD

1. Remove the dust cover and O-ring from the ball joint.

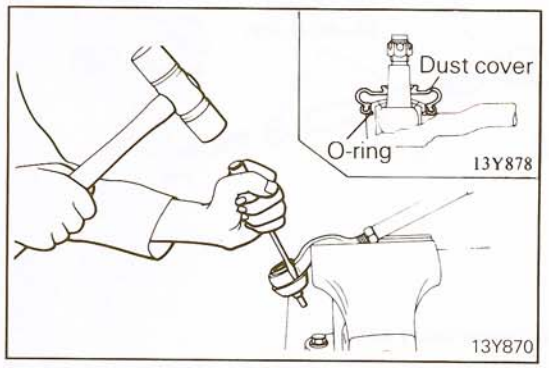

2. When installing the dust cover, fill the cover lip and the interior with the specified grease.

   Specified grease: Multipurpose grease SAE J310, NLGI No. 2

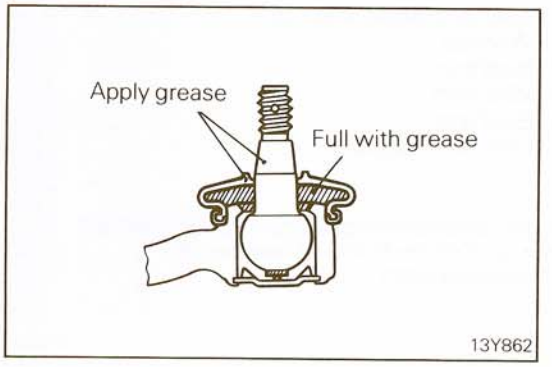

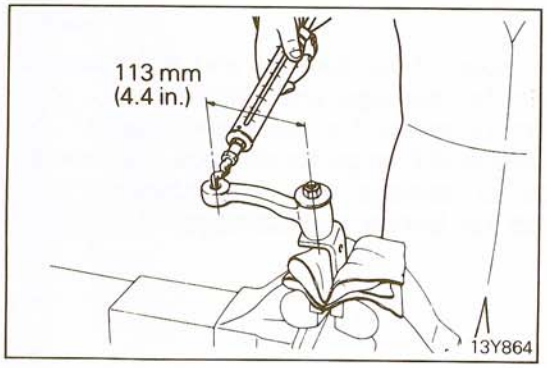

MEASUREMENT OF IDLER ARM STARTING TORQUE

Measure the starting torque of the idler arm with a spring balance.

Standard value: 26 – 78 N (6 – 18 lbs.)

STB Revision

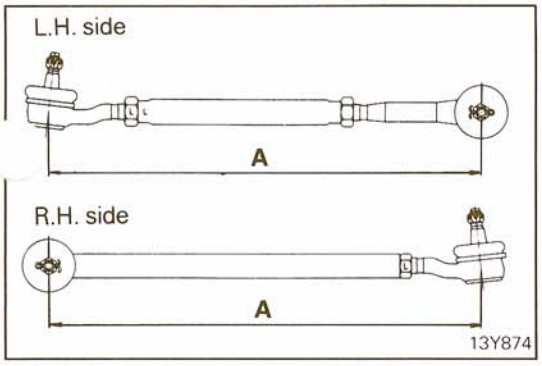

SERVICE POINTS OF REASSEMBLY N19VIAA

5. INSTALLATION OF TIE ROD / 4. TIE ROD INNER END / 3. TIE ROD OUTER END

1. Apply the specified grease to the threaded portion of the tie rod.
2. Temporarily tighten the tie rod so that the distance between the stud bolts of the tie rod is the following dimension.

Tie rod end ball joint center distance A:
Vehicles without an intercooler
338 mm (13.31 in.)
Vehicles with an intercooler
372 mm (14.65 in.)

Caution
Tie rod end tightness, left and right, should be uniform.



- **MEASUREMENT OF TIE ROD END BALL JOINT STARTING TORQUE**

Secure the relay rod and the tie rod in a vice.
Mount the nut to the ball joint, and then measure the ball joint starting torque.

Standard value:
Tie rod and relay rod (for gear box)
50 – 250 Ncm (4 – 22 in.lbs.)
Relay rod (for idler arm)
50 – 150 Ncm (4 – 13 in.lbs.)

TRANSMISSION

MANUAL AND AUTOMATIC

CONTENTS

AUTOMATIC TRANSMISSION **32**
ACCUMULATOR **118**
AUTOMATIC TRANSMISSION ASSEMBLY **82**
BRAKE BAND AND BAND SERVO **116**
CONNECTING DRUM ASSEMBLY **119**
CONTROL VALVE BODY **120**
DIRECT CLUTCH AND HIGH-REVERSE CLUTCH **110**
DRUM SUPPORT **107**
FORWARD CLUTCH **114**
GENERAL INFORMATION **32**
GOVERNOR **117**
LOW-REVERSE BRAKE **115**
OIL PUMP **105**
ON-VEHICLE SERVICE **69**
PLANETARY CARRIER **119**
SERVICE ADJUSTMENT PROCEDURES **67**
- Inspection of Transmission Fluid 67
- Replacement of Speedometer Cable 68
- Replacement of Transmission Fluid 67

SPECIAL TOOLS **51**
SPECIFICATIONS **48**
- General Specifications 48
- Lubricants 50
- Service Specifications 49
- Torque Specifications 49

TRANSMISSION **80**
TRANSMISSION CONTROL **77**
TRANSMISSION OIL COOLER **75**
TROUBLESHOOTING **52**
- Diagnostic Road Test
- Preliminary Checks (Prior to road testing)
- Pressure Testing
- Road Test Symptom Chart
- Stall Test
- Troubleshooting Chart
- Troubleshooting Guide

MANUAL TRANSMISSION **2**
COUNTERSHAFT **29**
EXTENSION HOUSING **27**
EXTENSION HOUSING COVER **31**
GEARSHIFT LEVER ASSEMBLY **9**
GEARSHIFT LEVER ASSEMBLY **30**
GENERAL INFORMATION **2**
MAIN DRIVE GEAR **23**
MAINSHAFT ASSEMBLY **24**
SERVICE ADJUSTMENT PROCEDURES **8**
- Inspection of Transmission Fluid 8
- Replacement of Speedometer Cable 8
- Replacement of Transmission Fluid 8

SPECIAL TOOLS **6**
SPECIFICATIONS **3**
- General Specifications 3
- Lubricants 5
- Sealants and Adhesives 5
- Service Specifications 3
- Torque Specifications 5

SPEEDOMETER SLEEVE ASSEMBLY **28**
TRANSMISSION **10**
TROUBLESHOOTING **7**
- Abnormal Noise and Vibration
- Gear Jump Out
- Oil Leaks
- Shifting Hard or Difficult

GENERAL INFORMATION

N21BAAD

The KM132 5-speed manual transmission has the gear reduction and ratio selection functions combined into one unit and housed in the aluminum diecast housing and case.
The gear train is all constant mesh type both forward and reverse and in order to provide driving performar meeting the engine performance, the gear train has a close gear ratio in the case of engine with intercooler c has a wide gear ratio in the case of engine without an intercooler.

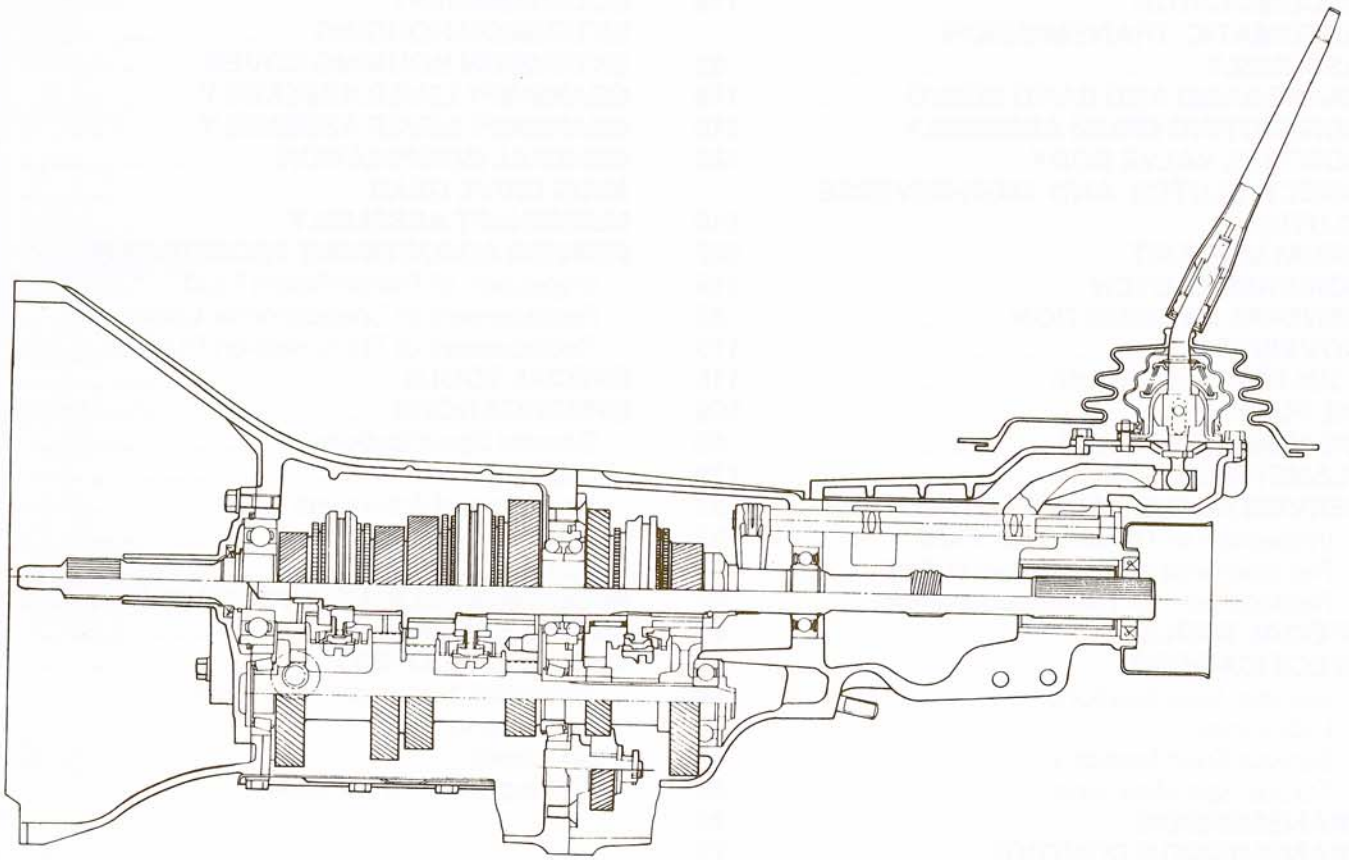

132063

STB Revision

SPECIFICATIONS

N21CA--

GENERAL SPECIFICATIONS

ems		Vehicles without an intercooler	Vehicles with an intercooler
Model		KM132-B	KM132-G
Type		5-speed, Floor-shift	5-speed, Floor-shift
Gear ratio	1st	3.740	3.369
	2nd	2.136	2.035
	3rd	1.360	1.360
	4th	1.000	1.000
	5th	0.856	0.856
	Reverse	3.578	3.578
Speedometer gear ratio (drive/driven)		8/22	8/23

SERVICE SPECIFICATIONS

mm (in.)

Standard value	
Retainer to bearing clearance	0 – 0.1 (0 – 0.004)
Counter gear end play	0 – 0.05 (0 – 0.0020)
Reverse idler gear end play	0.12 – 0.28 (0.005 – 0.011)
Overdrive gear end play	0.04 – 0.20 (0.002 – 0.008)
Resistance spring free length	28 (1.10)
Plunger springs free length	42 (1.65)
Main drive gear end play	0 – 0.06 (0 – 0.002)
3rd-4th synchronizer hub end play	0 – 0.08 (0 – 0.003)

ADJUSTMENT SPACER AND SNAP RING

Snap ring for main drive gear	
Thickness mm (in.) – Ident. color – Parts No.	2.30 (0.091) – White – MD701729
	2.35 (0.093) – None – MD701730
	2.40 (0.094) – Red – MD701731
	2.45 (0.096) – Blue – MD701732
	2.50 (0.098) – Yellow – MD701733
Spacer for main drive gear bearing	
Thickness mm (in.) – Ident. color – Parts No.	0.84 (0.033) – Black – MD701845
	0.93 (0.037) – None – MD701839
	1.02 (0.040) – Red – MD701840
	1.11 (0.044) – White – MD701841
	1.20 (0.047) – Yellow – MD701842
	1.29 (0.051) – Blue – MD701843
	1.38 (0.054) – Green – MD701844
Snap ring for mainshaft front end	
Thickness mm (in.) – Ident. color – Parts No.	2.15 (0.085) – Blue – MD701761
	2.22 (0.087) – None – MD701762
	2.29 (0.090) – Brown – MD701763
	2.36 (0.093) – White – MD701764

STB Revision

Spacer for countershaft taper bearing Thickness mm (in.) – Ident. mark – Parts No.	1.84 (0.0724) – 84 – MD706580 1.87 (0.0736) – 87 – MD706581 1.90 (0.0748) – 90 – MD706582 1.93 (0.0760) – 93 – MD706583 1.96 (0.0772) – 96 – MD706584 1.99 (0.0783) – 99 – MD706585 2.02 (0.0795) – 02 – MD706586 2.05 (0.0807) – 05 – MD706587 2.08 (0.0819) – 08 – MD706588 2.11 (0.0831) – 11 – MD706589 2.14 (0.0843) – 14 – MD706590 2.17 (0.0854) – 17 – MD706591 2.20 (0.0866) – 20 – MD706592 2.23 (0.0878) – 23 – MD706593 2.26 (0.0890) – 26 – MD706594 2.29 (0.0902) – 29 – MD706595 2.32 (0.0913) – 32 – MD706596 2.35 (0.0925) – 35 – MD706597 2.38 (0.0937) – 38 – MD706598 2.41 (0.0949) – 41 – MD706599 2.44 (0.0961) – 44 – MD706600 2.47 (0.0972) – 47 – MD706601 2.50 (0.0984) – 50 – MD706602 2.53 (0.0996) – 53 – MD706603 2.56 (0.1008) – 56 – MD706604 2.59 (0.1020) – 59 – MD706605 2.62 (0.1031) – 62 – MD706606 2.65 (0.1043) – 65 – MD706607 2.68 (0.1055) – 68 – MD706608

TORQUE SPECIFICATIONS

N21CC- -

Items	Nm	ft.lbs.
Propeller shaft flange yoke attaching bolt	50 – 60	36 – 43
Transmission mounting bolt	43 – 55	31 – 40
Starting motor mounting bolt	22 – 32	16 – 23
Engine to transmission	43 – 55	31 – 40
Mainshaft locking nut	250 – 270	181 – 195
Countershaft locking nut	160 – 190	116 – 137
Idler shaft locking nut	20 – 60	14 – 43
Idler shaft set bolt	15 – 22	11 – 16
Drain plug	60	43
Oil filler plug	30 – 35	22 – 25
Back-up light switch	30	22
Under cover	8 – 10	6 – 7
Seal plug (Neutral return plunger plug)	30 – 42	22 – 30
Speedometer sleeve clamp bolt	10 – 13	7.2 – 9.4
Control lever	15 – 22	11 – 16
Rear engine mounting to transmission bolt	20 – 24	14 – 17
Rear engine mounting to body bolt	10	7.2

LUBRICANTS

N21CD- -

Items	Specified lubricant	Quantity
Manual transmission oil lit. (U.S.qts., Imp.qts.)	Hypoid gear oil SAE 80, 75W-85W conforming to API GL-4	2.3 (2.4, 2.0)

SEALANTS AND ADHESIVES

N21CE- -

Items	Specified sealant	Quantity
Threaded portion of extension housing mounting bolt	3M Super Silicone 8662 or equivalent	As required
Extension housing mounting bolts (special bolt)	3M Liquid Gasket 8959 or equivalent	As required

SPECIAL TOOLS

N21DA--

Tool (Number and name)	Use	Tool (Number and name)	Use
MD998245-01 Lock pin installer 		MD998020 Bearing puller 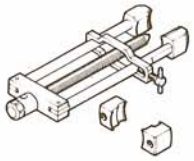	
MD998028 Bearing puller adapter 	Use with MD998020	MD998067-01 Mainshaft bearing installer 	
MD998029-01 Main drive gear bearing installer 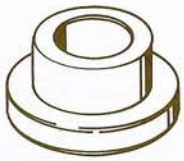		MD998200-01 Front bearing retainer oil seal installer 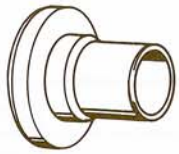	
MD998348-01 Taper bearing puller 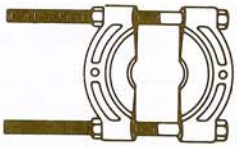		MB990938-01 Handle 	Use with MD998200
MIT4336 Bearing driver handle 	Use with MD998067-01, MD998029-01		

TROUBLESHOOTING

N21EAAC

Symptom	Probable cause	Remedy	Reference page
Abnormal noise and vibration	a. Loose or broken transmission and engine mounts	a. Tighten or replace mounts	21-10
	b. Improper end play of counter gear	b. Correct	21-19
	c. Worn or damaged gear	c. Replace	–
	d. Improper grade of oil	d. Replace to the specified grade of oil	21-8
	e. Low oil level	e. Add oil	21-8
	f. Improper engine idle speed	f. Adjust	0-11
Oil leaks	a. Damaged oil seal or gasket	a. Replace	21-13
Shifting hard or difficult	a. Abnormal contact or worn synchronizer ring and gear corns	a. Replace	21-13
	b. Synchronizer spring weakened	b. Replace synchronizer ring	21-13
	c. Improper grade of oil	c. Replace to the specified grade of oil	21-8
Gear jump out	a. Worn gear shift fork or broken poppet spring	a. Replace	21-13
	b. Excessive synchronizer hub to sleeve spline play	b. Replace	21-13

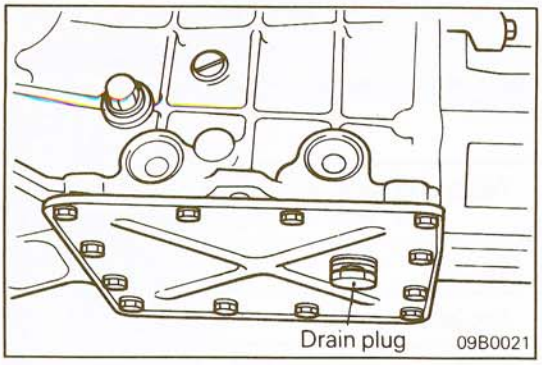

SERVICE ADJUSTMENT PROCEDURES

N21FCAA

REPLACEMENT OF TRANSMISSION FLUID

(1) Position vehicle on a flat level and remove drain plug drain transmission oil.
(2) Replace packing with a new one and tighten the drain plug.

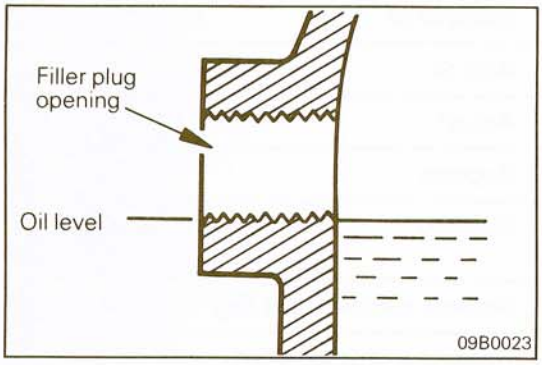

(3) Pour in fresh transmission oil through filler plug hole until it reaches the bottom of filler port.

Specified transmission oil:
Hypoid gear oil SAE 80W or 75W-85W conforming to API GL-4 or higher
Quantity: 2.3 lit. (2.4 U.S.qts., 2.0 Imp.qts.)

INSPECTION OF TRANSMISSION FLUID

N21FBAA

Refer to GROUP 0 LUBRICATION AND MAINTENANCE – Engine Adjustment.

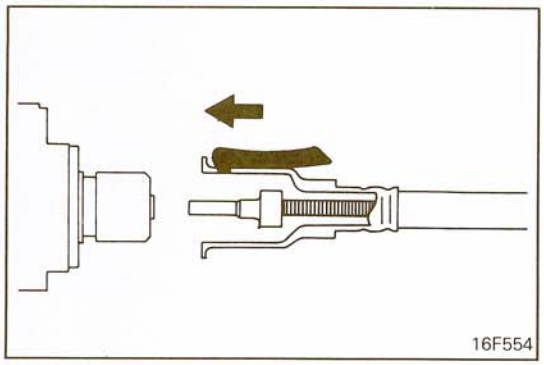

REPLACEMENT OF SPEEDOMETER CABLE

N21FEAA

(1) Replace the cable assembly if there is a malfunction.
(2) When connecting the cable to the meter, insert the cable until its stopper properly fits to the meterside groove.

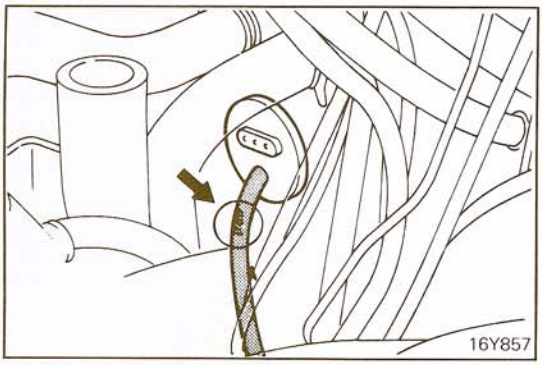

(3) After installing the speedometer, pull the speedometer cable through the grommet in the toeboard until the cable marking is visible from the engine compartment side.

Caution
Poor installation of the cable may cause a fluctuating meter pointer, or noise and a damaged harness inside the instrument panel.

STB Revision

GEARSHIFT LEVER ASSEMBLY

N21GA--

REMOVAL AND INSTALLATION

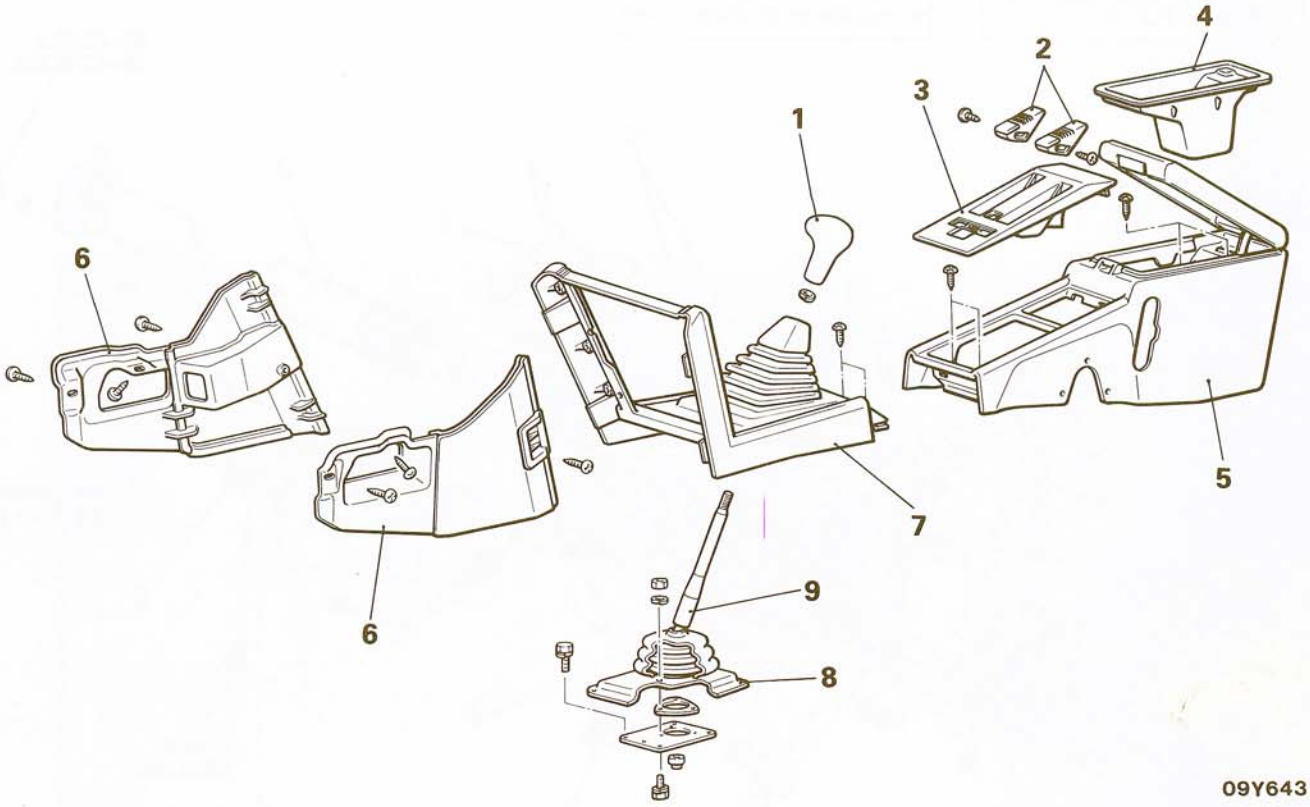

09Y643

Removal steps

1. Gearshift lever knob
2. Spool release lever
3. Cover
4. Inner box
5. Rear console box
6. Side console cover
7. Front console box
8. Dust cover retaining plate

◆◆ 9. Gearshift lever assembly

NOTE
(1) Reverse the removal procedures to reinstall.
(2) ◆◆: Refer to "Service Points of Removal".

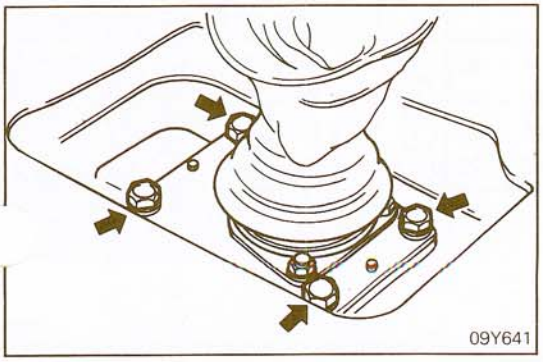

09Y641

SERVICE POINT OF REMOVAL

N21GBAA

9. REMOVAL OF GEARSHIFT LEVER ASSEMBLY

(1) Remove the bolts attaching the control lever cover.
(2) Uncouple stopper plate from extension cover.
(3) Remove the gearshift lever assembly by lifting it up.

NOTE
Keep the gearshift lever in the neutral position.

TRANSMISSION

N21MA--

REMOVAL AND INSTALLATION

Pre-removal Operation
- Removal of Under Cover
- Draining Transmission Oil (Refer to P.21-8.)

Post-installation Operation
- Refilling Transmission Oil (Refer to P.21-8.)
- Installation of Under Cover

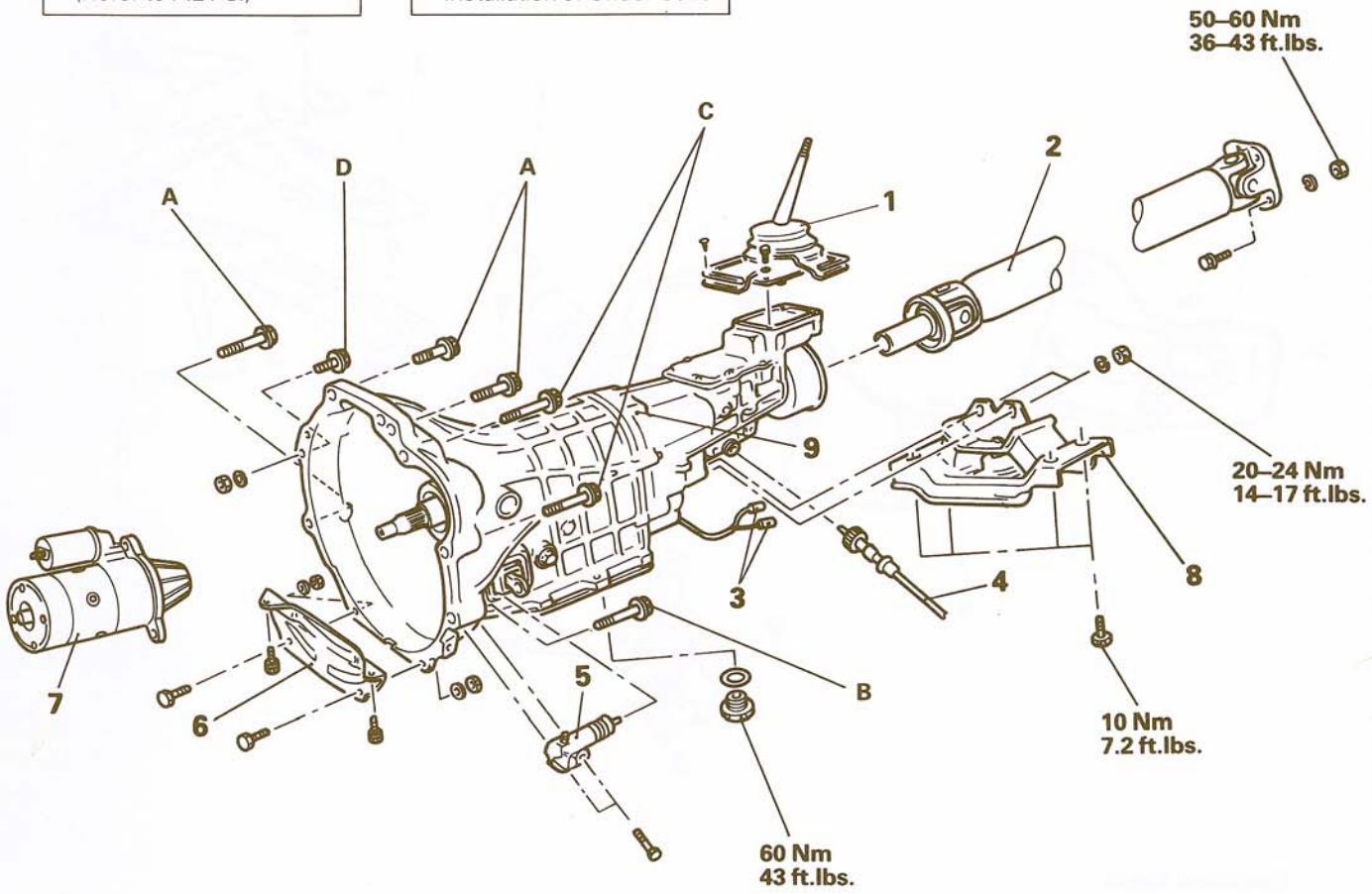

Removal steps

◆◆ 1. Gearshift lever assembly
◆◆ 2. Propeller shaft
◆◆ 3. Back-up lamp harness connector
◆◆ 4. Speedometer cable
◆◆ 5. Clutch release cylinder
◆◆ 6. Bell housing cover
◆◆ 7. Starting motor
8. Rear engine mounting
◆◆ ◆◆ 9. Transmission assembly

NOTE
(1) Reverse the removal procedures to reinstall.
(2) ◆◆: Refer to "Service Points of Removal".
(3) ◆◆: Refer to "Service Points of Installation".

	Nm	ft.lbs.	O.D. x Length mm (in.)	Bolt identification
A	43 – 55	31 – 40	(7) 10 x 40 (1.6)	(7) A x B
B	43 – 55	31 – 40	(7) 10 x 65 (2.6)	
C	22 – 32	16 – 23	(7) 10 x 60 (2.4)	
D	20 – 27	14 – 20	(7) 8 x 55 (2.2)	

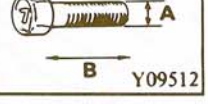

09Y639

STB Revision

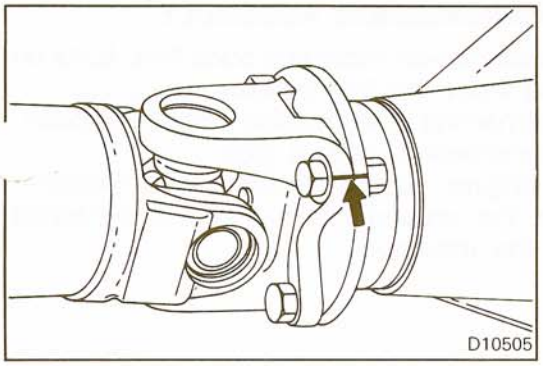
D10505

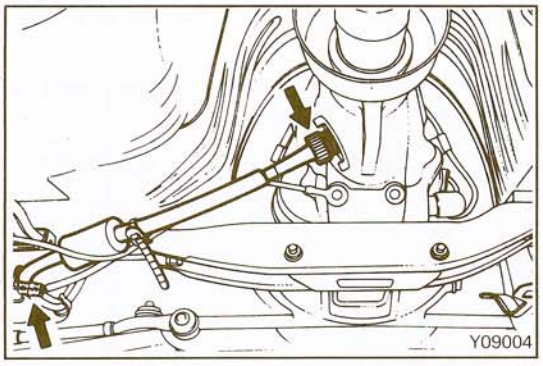
Y09004

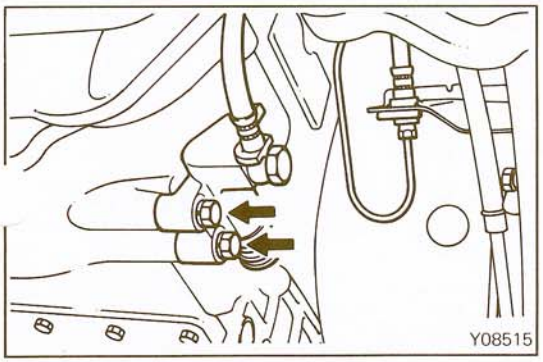
Y08515

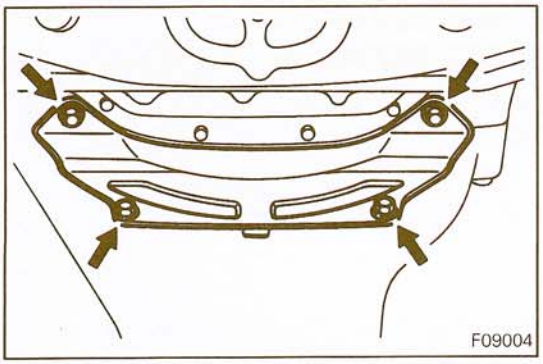
F09004

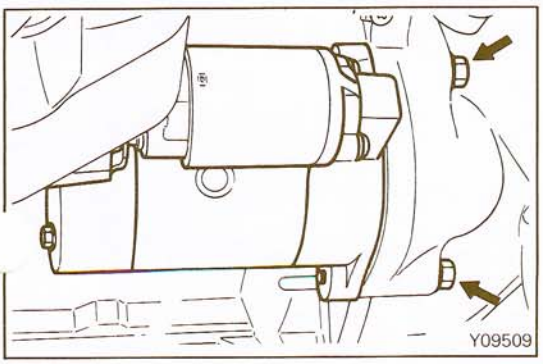
Y09509

SERVICE POINTS OF REMOVAL N21MBAD

1. REMOVAL OF GEARSHIFT LEVER ASSEMBLY

Refer to P.21-9.

2. REMOVAL OF PROPELLER SHAFT

(1) Make the mating marks on the flange yoke and the differential companion flange.
(2) Pull out the propeller shaft from the transmission.

Caution
Use care not to damage the lip of transmission oil seal.
Do not allow foreign matter to enter the transmission.

3. DISCONNECTION OF BACK-UP LAMP HARNESS CONNECTOR / 4. SPEEDOMETER CABLE

Disconnect the speedometer cable and the back-up lamp switch harness.

5. REMOVAL OF CLUTCH RELEASE CYLINDER

Remove the release cylinder attaching bolts and slide the release cylinder sideway.

6. REMOVAL OF BELL HOUSING COVER

Remove the bell housing cover.

7. REMOVAL OF STARTING MOTOR

Remove the starting motor.

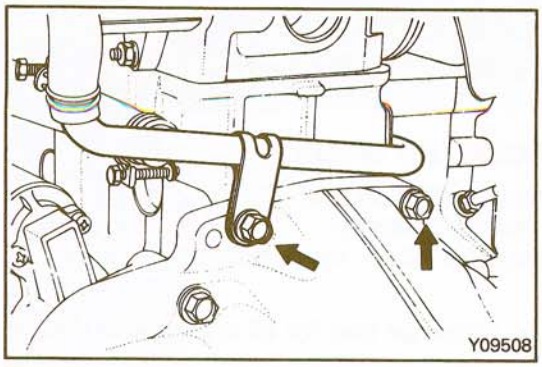

9. REMOVAL OF TRANSMISSION ASSEMBLY

(1) Remove the transmission mounting bolts (two bolts on the upper side) from the bell housing.
(2) Remove the remaining transmission mounting bolts.
(3) Support the transmission with a jack.
(4) Remove the engine support bracket and insulator assembly with the ground cable which is tightened together with the insulator.

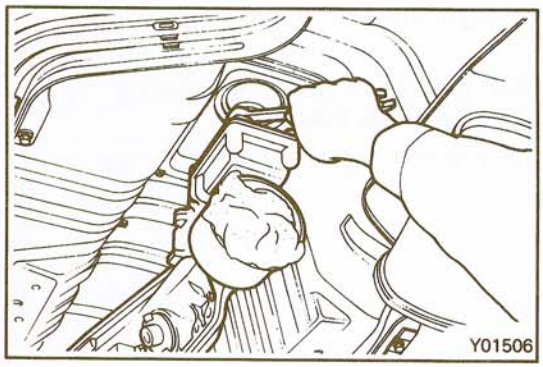

(5) Lower the transmission as shown in the illustration.

NOTE
Place a piece of cloth on the rear of the cylinder head to prevent damage to the toeboard.

Remove the gearshift lever assembly while the lever is in the neutral position.

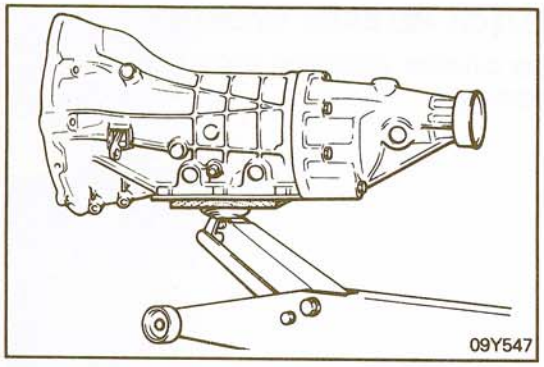

(6) Remove the transmission by pulling it toward the rear of the vehicle.

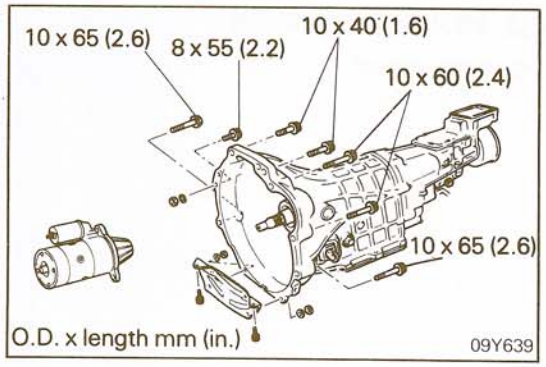

SERVICE POINT OF INSTALLATION N21MDAE

9. INSTALLATION OF TRANSMISSION ASSEMBLY

Note that transmission mounting bolts differ in size from one place to another.

TRANSMISSION

N21ME- -

DISASSEMBLY AND REASSEMBLY

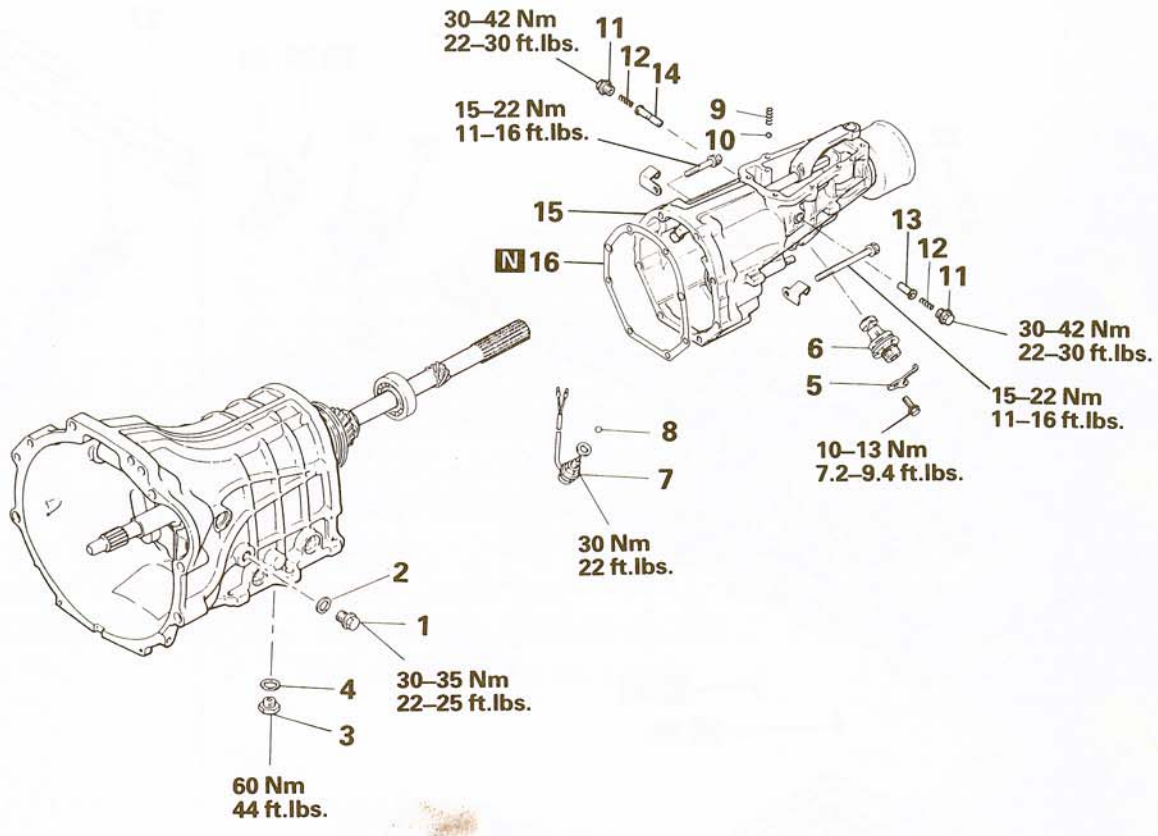

Disassembly steps

1. Oil filler plug
2. Gasket
3. Oil drain plug
4. Gasket
5. Sleeve clamp
- ◆◆ 6. Speedometer assembly
7. Back-up lamp switch
8. Steel ball
- ◆◆ 9. Spring
- ◆◆ 10. Ball
- ◆◆ 11. Plug
- ◆◆ 12. Spring
- ◆◆ 13. Neutral plunger A
- ◆◆ 14. Neutral plunger B
- ◆◆ ◆◆ 15. Extension housing
16. Extension housing gasket

NOTE
(1) Reverse the disassembly procedures to reassemble.
(2) ◆◆: Refer to "Service Points of Disassembly".
(3) ◆◆: Refer to "Service Points of Reassembly".
(4) N: Non-reusable parts

132083

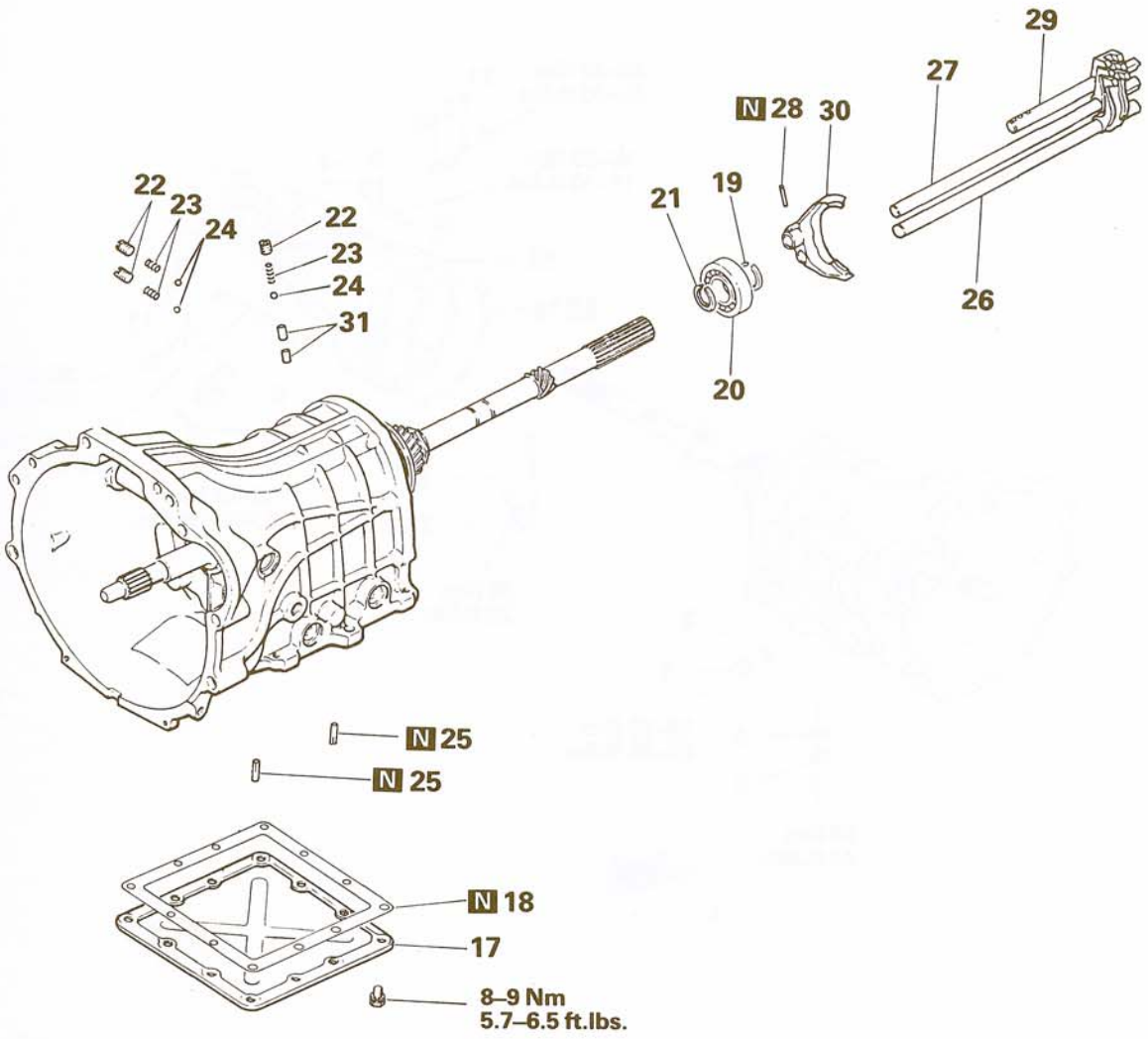

Disassembly steps

17. Under cover
18. Under cover gasket
19. Snap ring
20. Mainshaft rear bearing
21. Snap ring
◆◆ 22. Plug
◆◆ 23. Poppet spring
◆◆ 24. Steel ball
◆◆ ◆◆ 25. Spring pin
26. 1-2 shift rail
27. 3-4 shift rail
◆◆ ◆◆ 28. Spring pin
29. OD-R shift rail
30. OD-R shift fork
31. Interlock plunger

NOTE
(1) Reverse the disassembly procedures to reassemble.
(2) ◆◆: Refer to "Service Points of Disassembly".
(3) ◆◆: Refer to "Service Points of Reassembly".
(4) N: Non-reusable parts

132048

STB Revision

Disassembly steps

- ◆◆ ◆◆ 32. Mainshaft lock nut
- ◆◆ ◆◆ 33. Countershaft lock nut
- ◆◆ 34. Counter rear bearing
- ◆◆ 35. Counter overdrive gear
- 36. Spacer
- 37. Reverse idler gear
- 38. Spacer
- 39. Sleeve
- 40. Steel ball
- 41. Overdrive gear

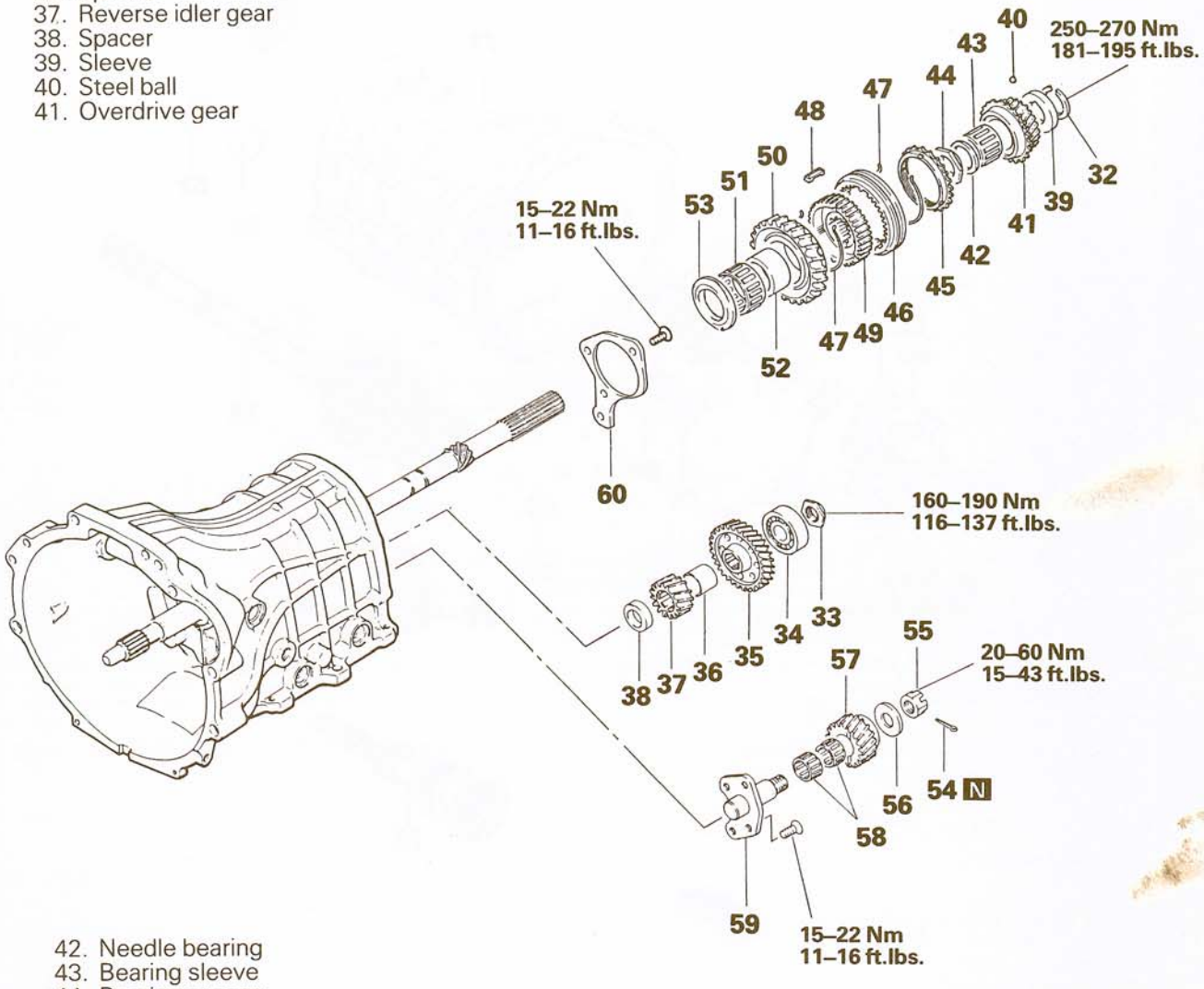

- 42. Needle bearing
- 43. Bearing sleeve
- 44. Bearing spacer
- ◆◆ 45. Synchronizer ring
- ◆◆ 46. OD-R synchronizer sleeve
- ◆◆ 47. Synchronizer spring
- ◆◆ 48. Synchronizer key
- ◆◆ 49. Synchronizer hub
- 50. Reverse gear
- 51. Needle bearing
- 52. Bearing sleeve
- 53. Spacer
- 54. Split pin
- 55. Slotted nut
- 56. Thrust washer
- 57. Reverse idler gear
- 58. Needle bearing
- ◆◆ ◆◆ 59. Reverse idler gear shaft
- 60. Rear bearing retainer

NOTE
(1) Reverse the disassembly procedures to reassemble.
(2) ◆◆: Refer to "Service Points of Disassembly".
(3) ◆◆: Refer to "Service Points of Reassembly".
(4) N: Non-reusable parts

132049

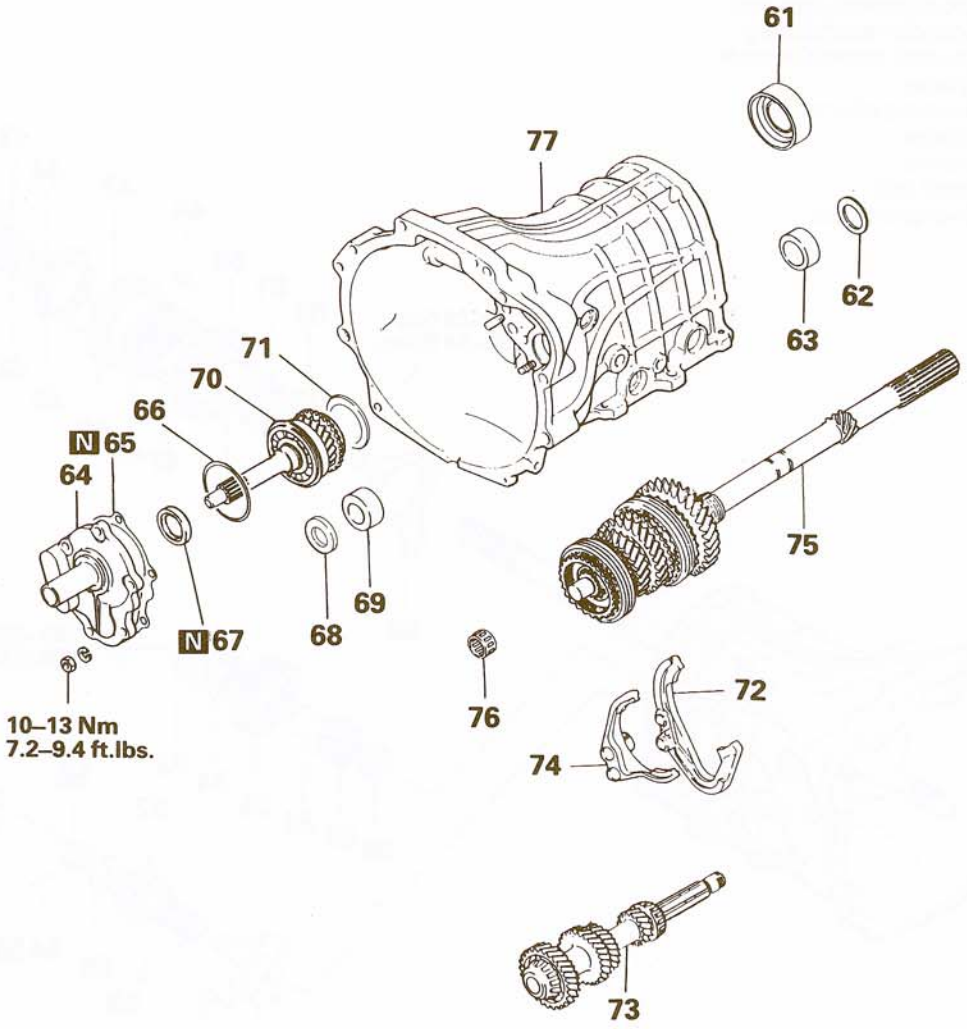

Disassembly steps

- ◆◆ ◆◆ 61. Mainshaft bearing
- ◆◆ 62. Spacer
- 63. Counter center bearing outer race
- ◆◆ 64. Front bearing retainer
- ◆◆ 65. Front bearing retainer gasket
- ◆◆ 66. Spacer
- ◆◆ 67. Oil seal
- 68. Spacer (vehicles with an intercooler)
- 69. Counter front bearing outer race
- ◆◆ ◆◆ 70. Main drive gear assembly
- 71. Spacer (vehicles without an intercooler)
- 72. 1st-2nd shift fork
- 73. Countershaft assembly
- 74. 3rd-4th shift fork
- 75. Mainshaft assembly
- 76. Needle bearing
- 77. Transmission case

NOTE
(1) Reverse the disassembly procedures to reassemble.
(2) ◆◆: Refer to "Service Points of Disassembly".
(3) ◆◆: Refer to "Service Points of Reassembly".
(4) N: Non-reusable parts

132064

SERVICE POINTS OF DISASSEMBLY N21MFBA

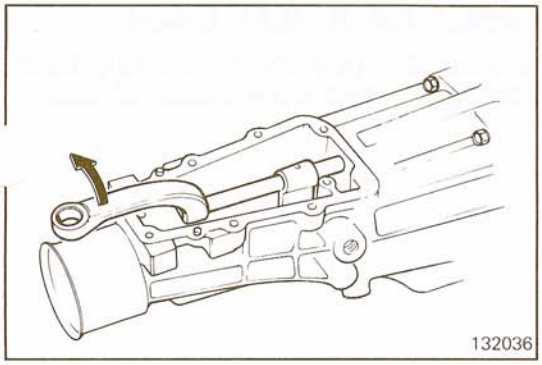

15. REMOVAL OF EXTENSION HOUSING

While pushing the change shifter down to left, remove extension housing by pulling rearward.

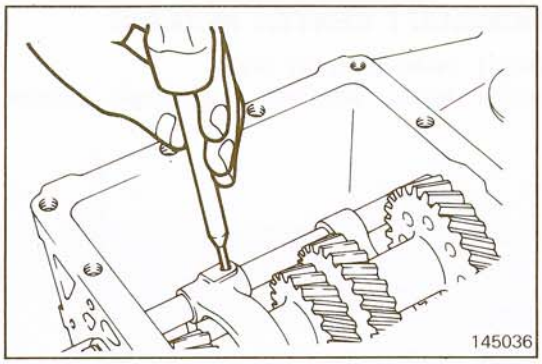

25. 28. REMOVAL OF SPRING PINS

Using a pin punch, drive out the spring pins.

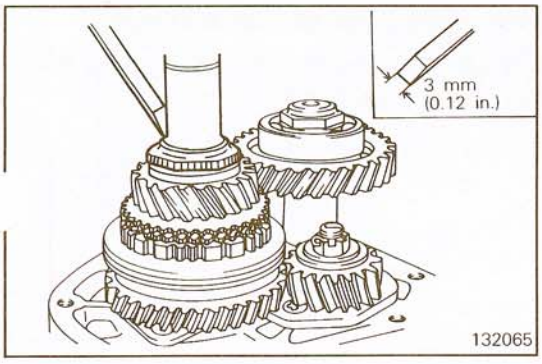

32. REMOVAL OF MAINSHAFT LOCK NUT / 33. COUNTERSHAFT LOCK NUT

(1) Using blunt punch or chisel that has a blade as shown in the illustration, bend back lock tabs of the mainshaft and countershaft lock nuts.
(2) Shift the OD-R synchronizer sleeve in reverse, and then 1st-2nd synchronizer sleeve in 2nd.
(3) Remove the mainshaft lock nut and countershaft lock nut.

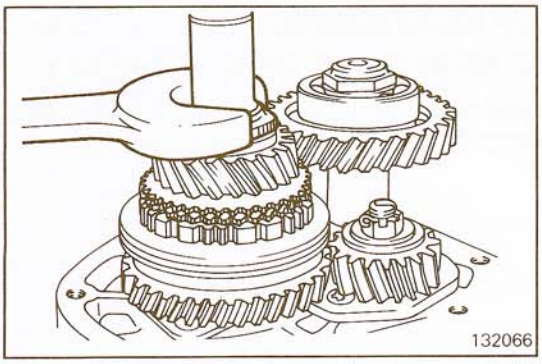

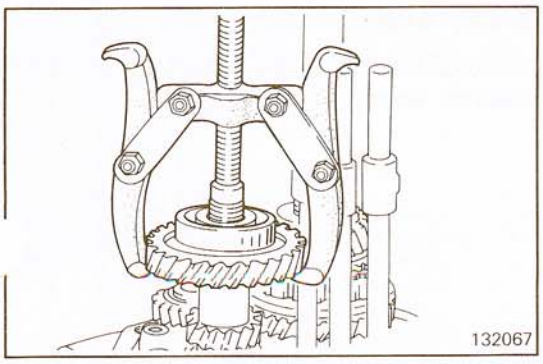

34. REMOVAL OF COUNTER REAR BEARING / 35. COUNTER OVERDRIVE GEAR

Pull off counter overdrive gear and ball bearing by using a suitable puller.

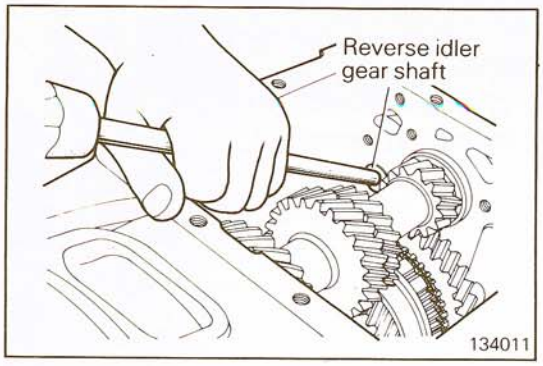

59. REMOVAL OF REVERSE IDLER GEAR SHAFT

(1) Remove four reverse idler gear shaft mounting bolts.
(2) Drive reverse idler gear shaft from inside of case.

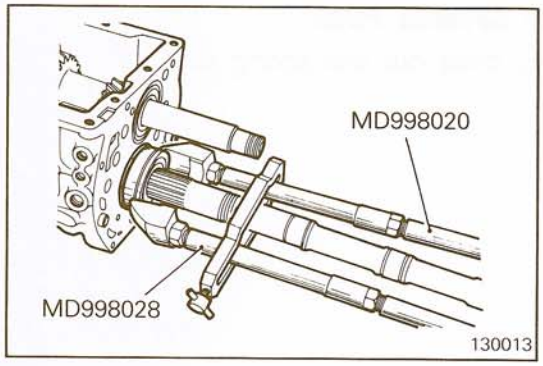

61. REMOVAL OF MAINSHAFT CENTER BEARING

(1) Remove mainshaft bearing snap ring.
(2) Using the special tools, remove mainshaft center bearing.

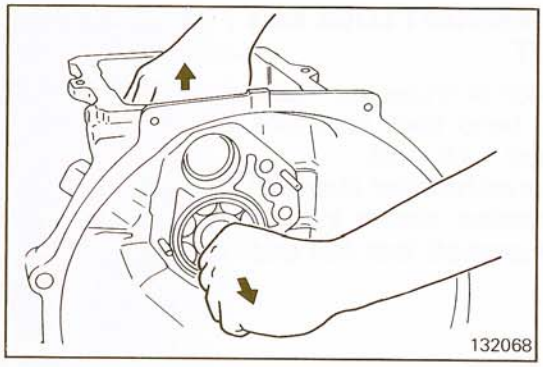

70. REMOVAL OF MAIN DRIVE GEAR ASSEMBLY

Pull the counter gear up in the case and remove the main drive gear with bearing toward front case.

SERVICE POINTS OF REASSEMBLY N21MGBA

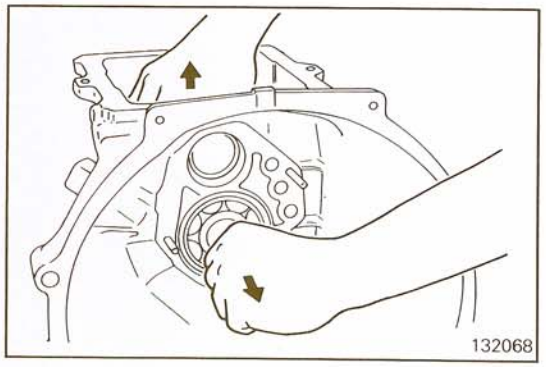

70. INSTALLATION OF MAIN DRIVE GEAR ASSEMBLY

Hold the counter gear upward in the case and install the main drive gear assembly.



67. INSTALLATION OF OIL SEAL

Apply transmission oil to oil seal lip, and install the oil seal to the front bearing retainer using the special tool.

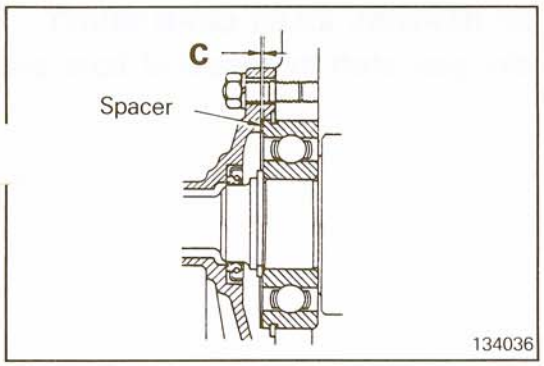

66. INSTALLATION OF SPACER / 65. FRONT BEARING RETAINER GASKET / 64. FRONT BEARING RETAINER

(1) Select spacer to adjust clearance (C) to the standard value before installing the front bearing retainer.

Standard value: 0 – 0.1 mm (0 – 0.004 in.)

(2) Apply sealant on both sides of the front bearing retainer gasket and put it onto the case. Quickly set the selected spacer on it and install the bearing retainer.

Specified sealant: 3M Super Weatherstrip No. 8001 or equivalent

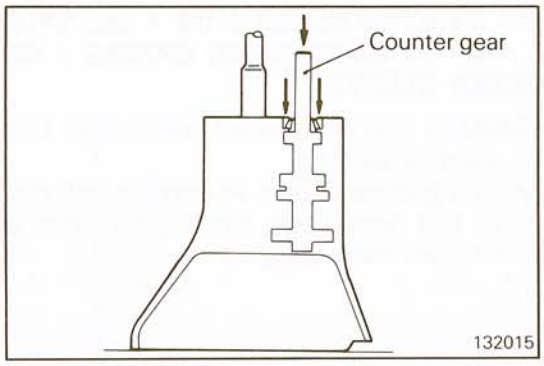

62. INSTALLATION OF SPACER

(1) Hold down counter gear and bearing outer race (in the direction of arrow shown in the illustration).

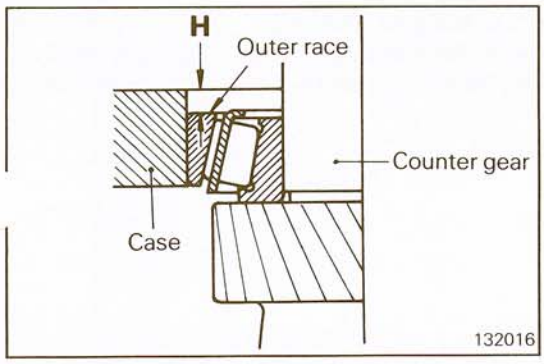

(2) Put a spacer of proper thickness (slightly thinner than dimension "H" shown in the illustration) on outer race.

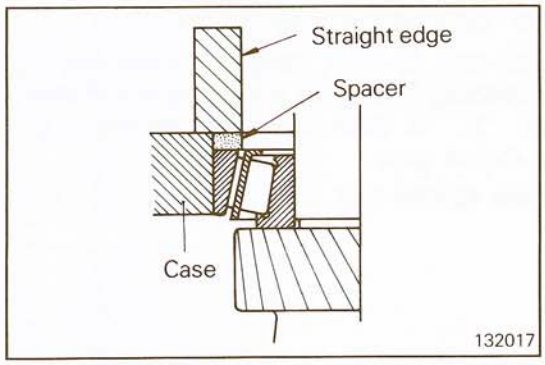

(3) Put straight edge on spacer and try to turn spacer by index finger. If spacer turns lightly, replace it with spacer one rank [0.03 mm (0.0012 in.)] thicker, and similarly turn this spacer. In this manner, choose and install a spacer which makes clearance between straight edge and spacer closest to 0. Make sure that the bearings are NOT preloaded.

Counter gear end play: 0 – 0.05 mm (0 – 0.0020 in.)

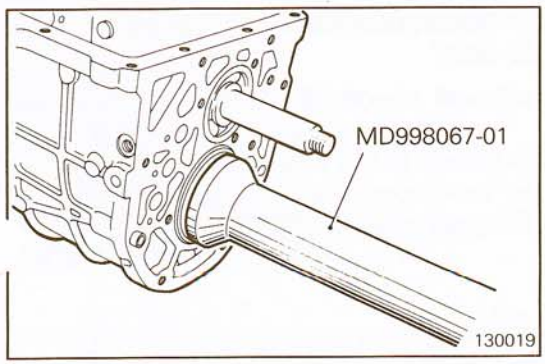

61. INSTALLATION OF MAINSHAFT BEARING

After installing the snap ring into the mainshaft bearing, install mainshaft bearing into the transmission case using the special tool.

STB Revision

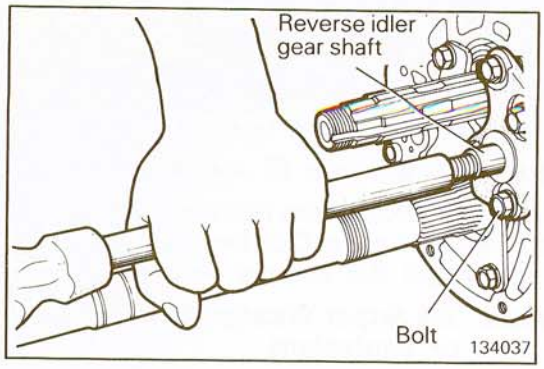

59. INSTALLATION OF REVERSE IDLER GEAR SHAFT

Position reverse idler gear shaft by means of bolts and install in position.

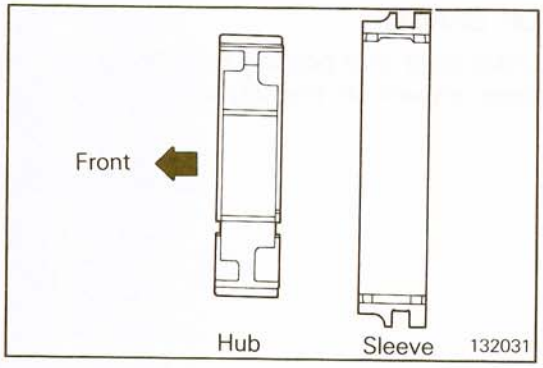

49. INSTALLATION OF SYNCHRONIZER HUB / 48. SYNCHRONIZER KEY / 47. SYNCHRONIZER SPRING / 46. OD-R SYNCHRONIZER SLEEVE

(1) Assemble synchronizer hub and sleeve. Make sure that hub and sleeve slide smoothly.
(2) Insert three keys into groove of hub. Assemble hub and keys as shown in the illustration since they have a definite direction to be assembled.

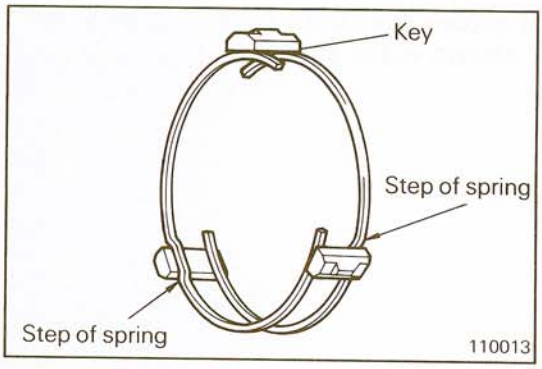

(3) Install two synchronizer springs. When installing springs, make sure that steps of front and rear springs are positioned on synchronizer key, but not on the same key.

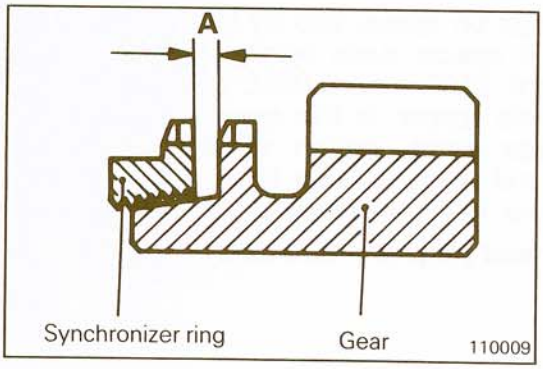

45. INSTALLATION OF SYNCHRONIZER RING

Engage synchronizer ring to O.D. gear as shown in the illustration before installing O.D. gear and ensure that there is certain clearance "A". If dimension "A" exceeds the limit, replace ring and/or gear.

Limit: Min. 0.5 mm (0.020 in.)

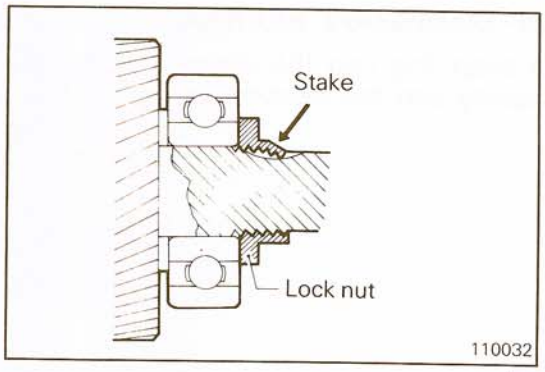

33. INSTALLATION OF COUNTERSHAFT LOCK NUT / 32. MAINSHAFT LOCK NUT

(1) Tighten mainshaft and countershaft lock nut to specified torque.
(2) Stake the area as shown in the illustration without fail to prevent lock nut from loosening.
(3) Ensure that O.D. gear rotates smoothly.

STB Revision

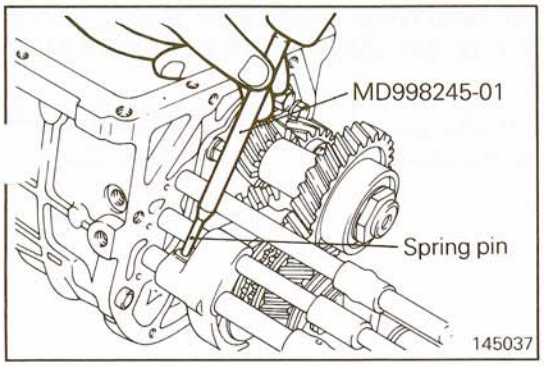

28. 25. INSTALLATION OF SPRING PINS

(1) Using the special tool, Lock Pin Installer, drive in OD-R shift fork spring pin.

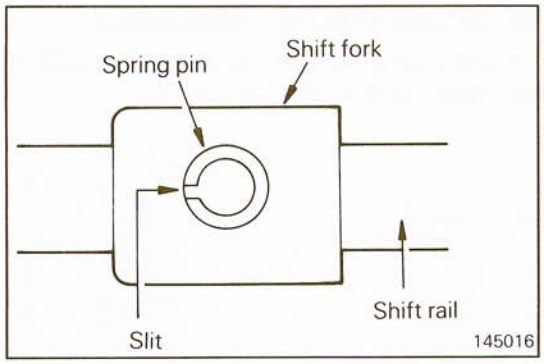

(2) Drive in spring pin so as to place slit in direction of center line of shift rail. Drive in spring pin for 3rd-4th and 1st-2nd shift forks in the same manner.

NOTE
Do not reuse spring pin.

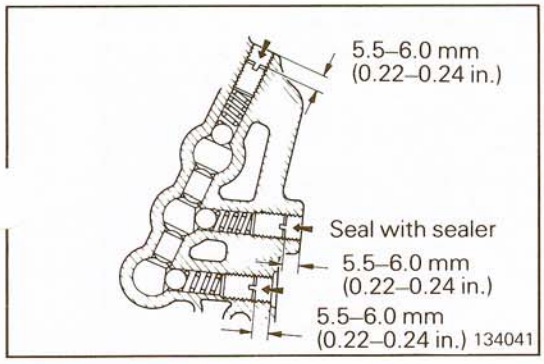

24. INSTALLATION OF STEEL BALL / 23. POPPET SPRING / 22. PLUG

(1) Insert steel ball and poppet spring into each shift rail. Tighten plug to specified position.

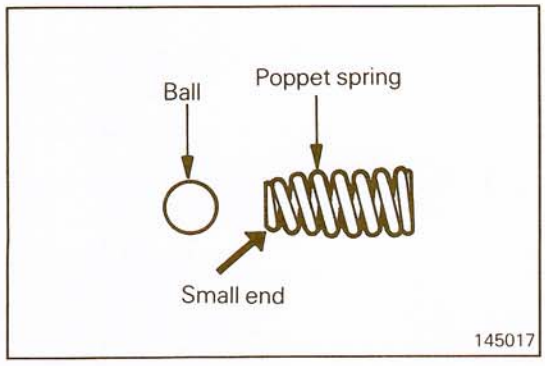

(2) Insert poppet spring with small end on ball side. Three springs are identical to one another.
(3) After installation, seal plug head with sealer.

Specified sealant: 3M Super Silicone 8662 or equivalent

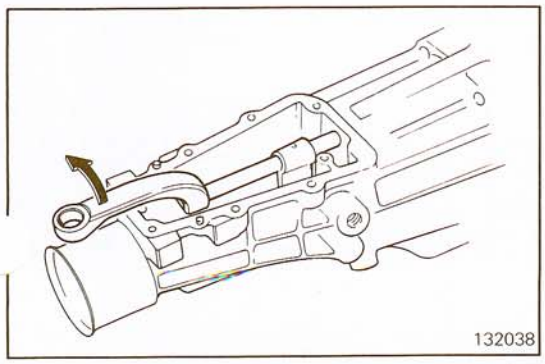

15. INSTALLATION OF EXTENSION HOUSING

When installing the extension housing, put the change shifter down in the arrow direction, and fit control finger in groove provided in selector.

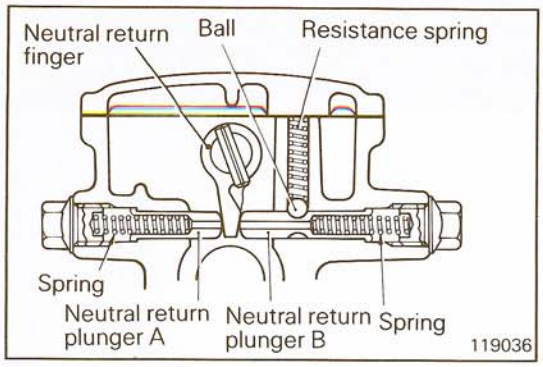

14. INSTALLATION OF NEUTRAL PLUNGER B / 13. NEUTRAL PLUNGER A / 12. SPRING / 11. PLUG / 10. BALL / 9. SPRING

Install neutral return plungers A and B and springs. Then install steel ball and resistance spring, and tighten the s plugs.

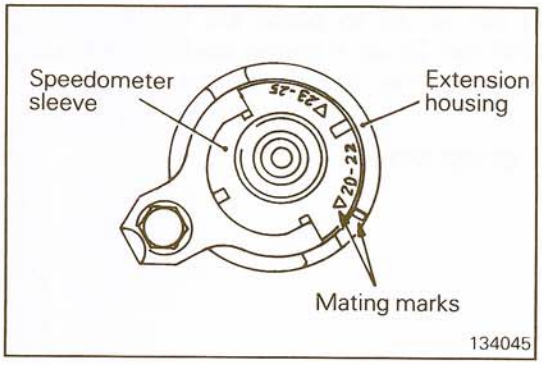

6. INSTALLATION OF SPEEDOMETER ASSEMBLY

Align mating marks according to the number of teeth of speedometer driven gear and install assembly.

MAIN DRIVE GEAR

N21MQAA

DISASSEMBLY AND REASSEMBLY

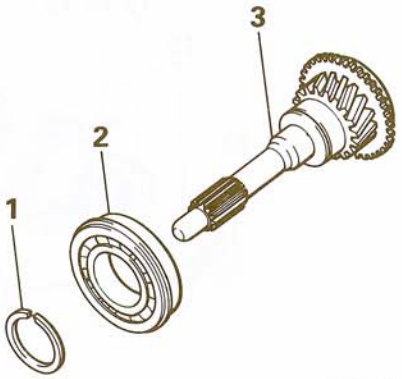

◆◆ 1. Snap ring
◆◆ ◆◆ 2. Bearing
3. Main drive gear

NOTE
(1) Reverse the disassembly procedures to reassemble.
(2) ◆◆: Refer to "Service Points of Disassembly".
(3) ◆◆: Refer to "Service Points of Reassembly".

110038

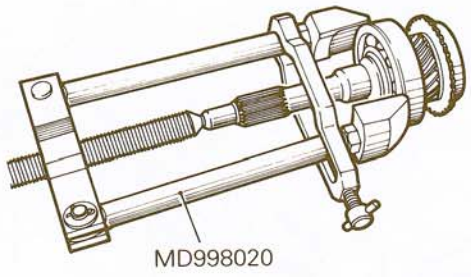

134016

SERVICE POINT OF DISASSEMBLY

2. REMOVAL OF BEARING

(1) Remove main drive gear snap ring and bearing snap ring.
(2) Using the special tool, Bearing Puller, pull ball bearing from main drive gear.

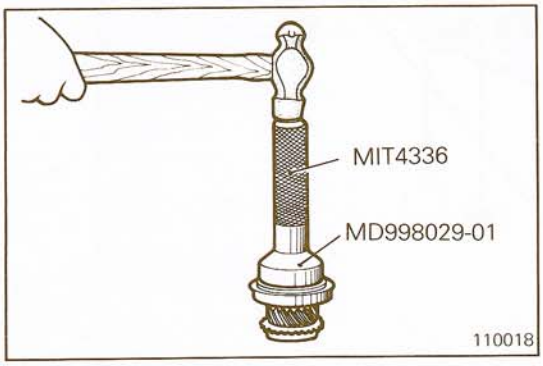

110018

SERVICE POINTS OF REASSEMBLY

2. INSTALLATION OF BEARING

With the special tool, Bearing Installer, applied to main drive gear, press bearing in by means of a hammer or a press.

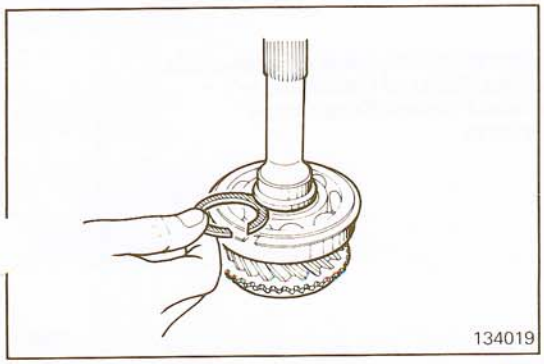

134019

1. INSTALLATION OF SNAP RING

Select and install main drive gear snap ring of such thickness that will minimize clearance between snap ring and bearing. In other words, install the thickest snap ring that can fit in snap ring groove.

STB Revision

MAINSHAFT ASSEMBLY

N21PE--

DISASSEMBLY AND REASSEMBLY

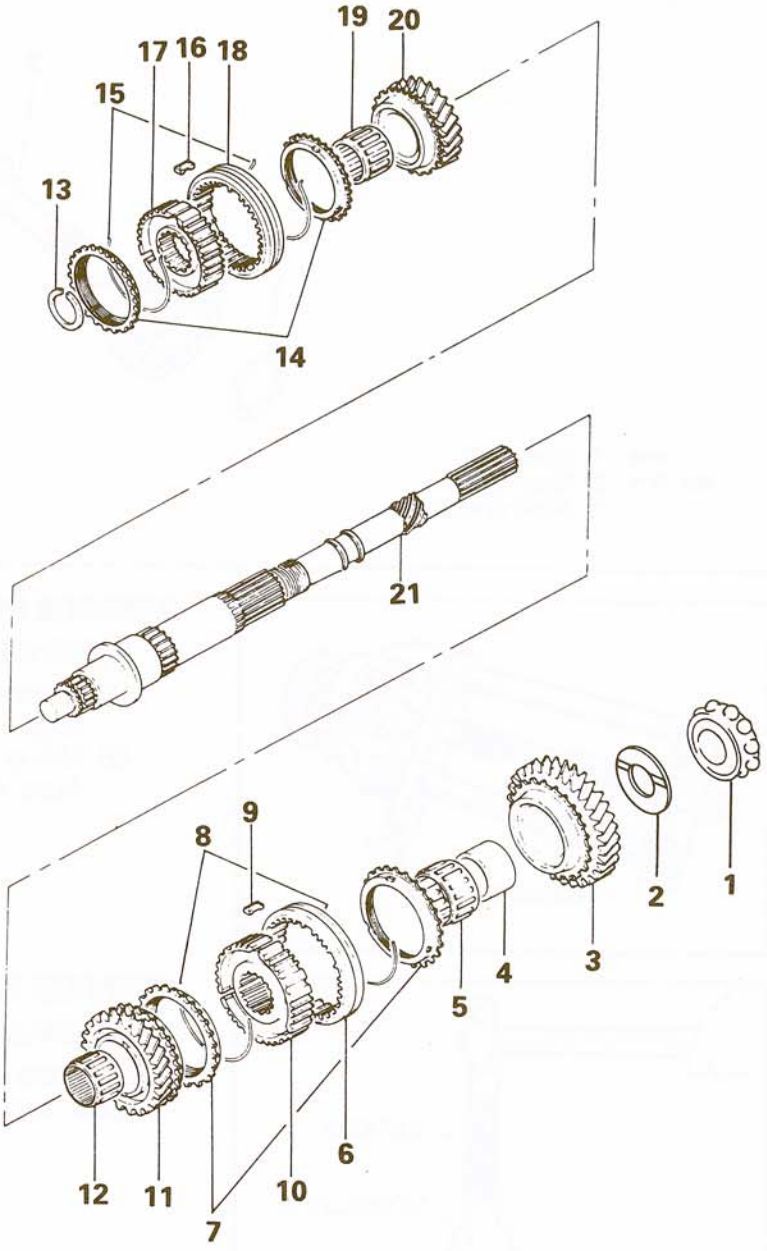

◆◆ 1. Ball bearing inner race
2. Spacer (vehicles without an intercooler)
3. 1st speed gear
4. Bearing sleeve
5. Needle bearing
◆◆ 6. 1st-2nd synchronizer sleeve
7. Synchronizer ring
◆◆ 8. Synchronizer spring
◆◆ 9. Synchronizer key
◆◆ 10. 1st-2nd synchronizer hub
◆◆ 11. 2nd speed gear
12. Needle bearing
13. Snap ring
14. Synchronizer ring
◆◆ 15. Synchronizer spring
◆◆ 16. Synchronizer key
◆◆ 17. 3rd-4th synchronizer hub
◆◆ 18. 3rd-4th synchronizer sleeve
19. Needle bearing
20. 3rd speed gear
21. Mainshaft

NOTE
(1) Reverse the disassembly procedures to reassemble.
(2) ◆◆: Refer to "Service Points of Disassembly".
(3) ◆◆: Refer to "Service Points of Reassembly".
(4) N: Non-reusable parts

132082

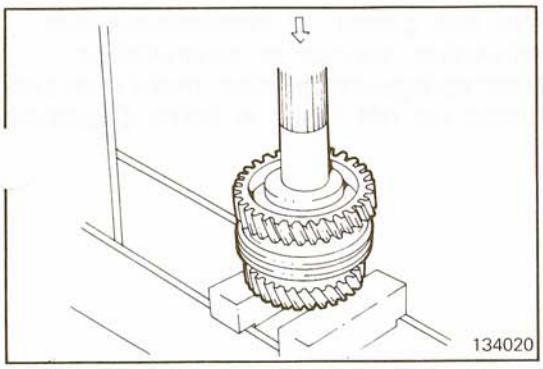

SERVICE POINTS OF DISASSEMBLY N21PFAA

1. REMOVAL OF BALL BEARING INNER RACE / 11. SECOND SPEED GEAR

Holding second speed gear on press base, push rear end of mainshaft to remove bearing inner race (double bearing only), gear bearing sleeve, first speed gear, 1st-2nd speed synchronizer and second speed gear.

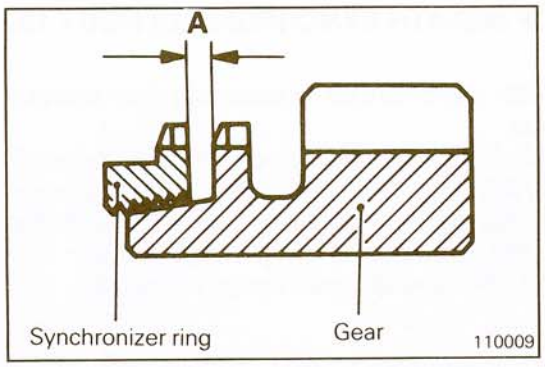

INSPECTION N21PGAA

- Check synchronizer ring for worn and damaged internal threads.
- With synchronizer assembled to cone of each gear, check dimension "A".
  If "A" exceeds the limit, replace synchronizer ring and/or gear.
  Limit: 0.5 mm (0.020 in.)

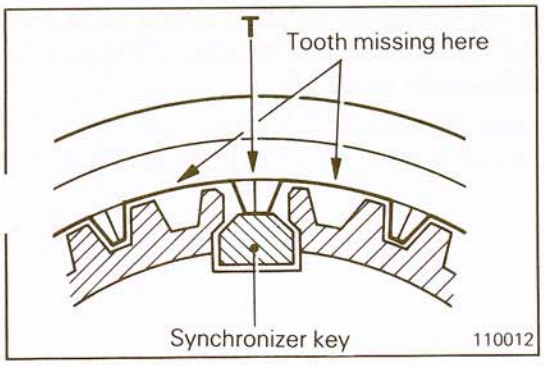

SERVICE POINTS OF REASSEMBLY N21PHAA

18. INSTALLATION OF 3RD-4TH SYNCHRONIZER SLEEVE / 17. 3RD-4TH SYNCHRONIZER HUB / 16. SYNCHRONIZER KEY / 15. SYNCHRONIZER SPRING

(1) Mate synchronizer hub with sleeve using mark made at disassembly. Make sure that hub and sleeve slide smoothly. If they slide unsmoothly, replace hub and sleeve assembly.

(2) 3rd-4th synchronizer sleeve has teeth missing at six portions. Assemble hub to sleeve in such a way that center tooth "T" between two missing teeth will touch synchronizer key.

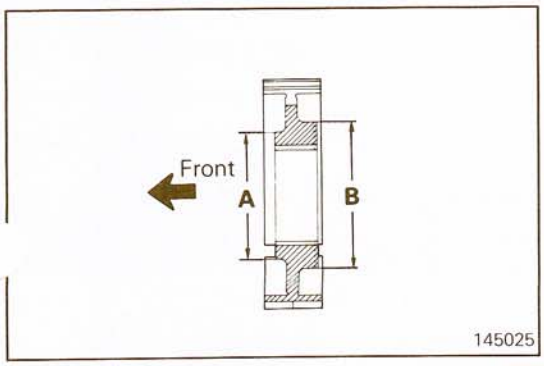

(3) Use care when installing 3rd-4th synchronizer hub since only 3rd-4th synchronizer is directional. Smaller diameter side "A" of center boss is front of 3rd-4th synchronizer hub.

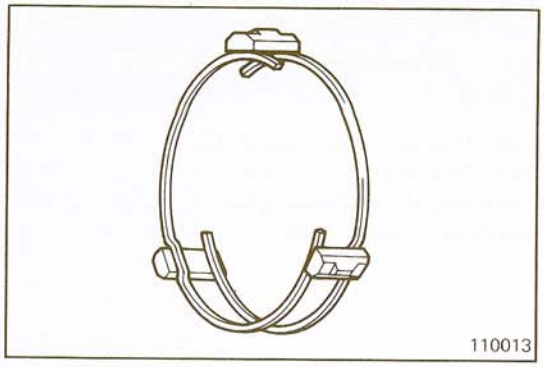
110013

(4) Insert three keys into groove of synchronizer hub.
(5) Install two synchronizer springs to synchronizer.
When synchronizer springs are installed, make sure that front and rear ones are not faced in same direction.

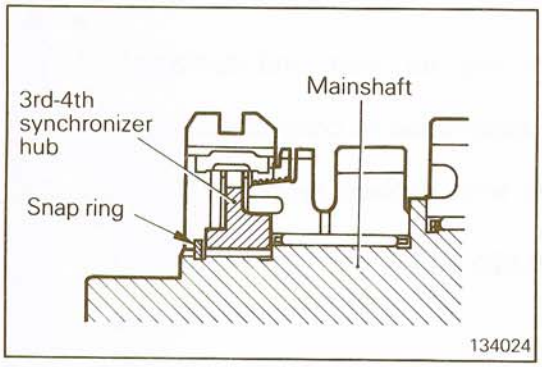

134024

17. INSTALLATION OF 3RD-4TH SYNCHRONIZER HUB / 13. SNAP RING

(1) Assemble 3rd-4th synchronizer positioning hub toward correct direction.
(2) As for mainshaft front end snap ring, select and install one of such thickness that will minimize clearance between snap ring and hub. In other words, install the thickest snap ring that fits in snap ring groove.
(3) Make sure that 3rd speed gear turns smoothly.

10. INSTALLATION OF 1ST-2ND SYNCHRONIZER HUB / 9. SYNCHRONIZER KEY / 8. SYNCHRONIZER SPRING / 6. 1ST-2ND SYNCHRONIZER SLEEVE

Assemble 1st-2nd synchronizer in the same manner as for the 3rd-4th synchronizer described in the preceding step.

EXTENSION HOUSING

N21QE- -

DISASSEMBLY AND REASSEMBLY

1. Lock pin
2. Spring pin
3. Control flange and control shaft
4. Neutral return finger
5. Change shifter
6. Dust seal guard
7. Oil seal
8. Extension housing

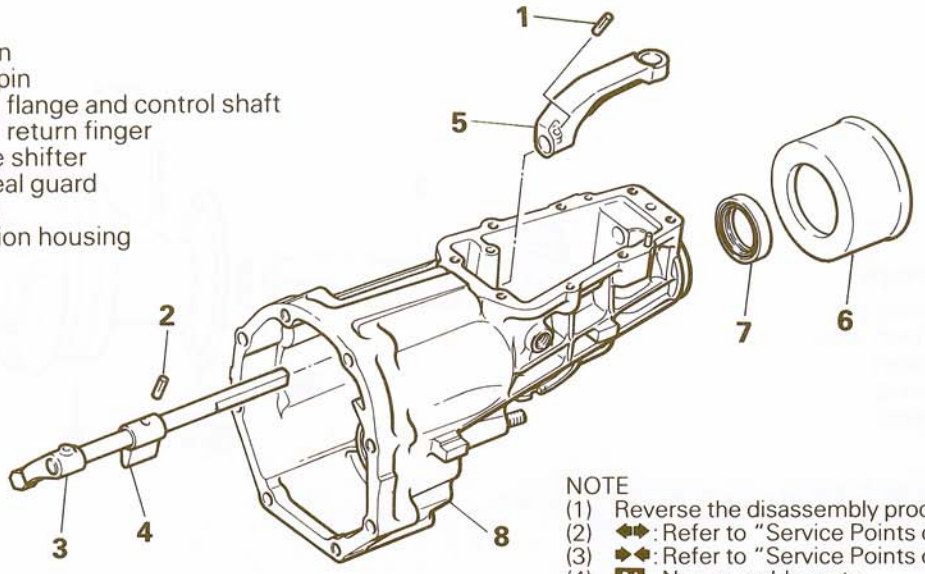

NOTE
(1) Reverse the disassembly procedures to reassemble.
(2) ◆◆: Refer to "Service Points of Disassembly".
(3) ◆◆: Refer to "Service Points of Reassembly".
(4) N: Non-reusable parts

132040

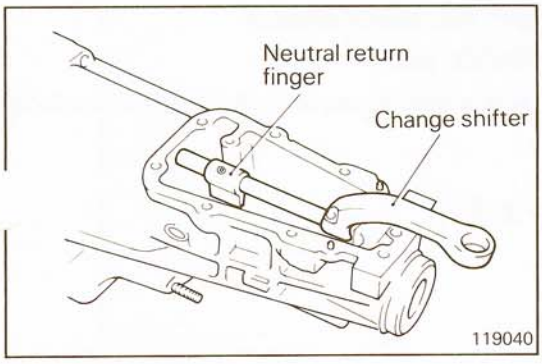

SERVICE POINTS OF DISASSEMBLY

N21QFA- -

1. REMOVAL OF LOCK PIN / 2. SPRING PIN

To remove control shaft from extension housing, remove lock pin from neutral return finger and remove spring pin from change shifter with the special tool, Lock Pin Extractor. Then remove control shaft toward front of housing.

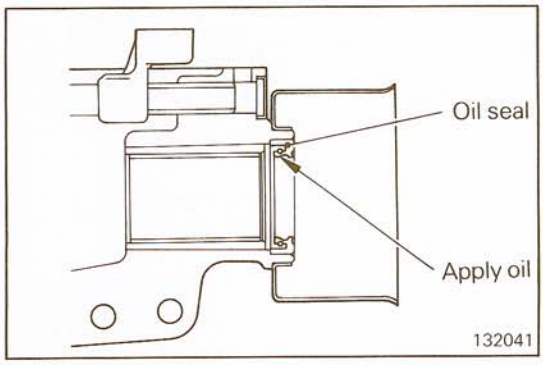

SERVICE POINTS OF REASSEMBLY

N21QHAA

7. INSTALLATION OF OIL SEAL

(1) Apply oil to lip of oil seal.
(2) Install oil seal with lip toward front of housing.

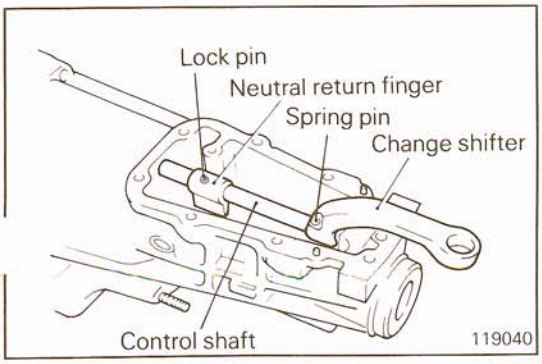

2. INSTALLATION OF SPRING PIN / 1. LOCK PIN

Align pin holes of control shaft, neutral return finger and change shifter and using the special tool, Lock Pin Installer, install lock pin and spring pin.

NOTE
Do not reuse spring pin.

STB Revision

SPEEDOMETER SLEEVE ASSEMBLY

N21RE- -

DISASSEMBLY AND REASSEMBLY

Disassembly steps

◆◆ 1. Spring pin
2. Driven gear
3. Sleeve
4. O-ring
5. O-ring

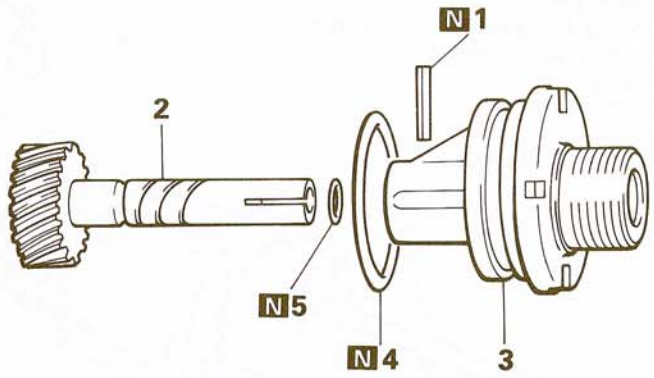

NOTE
(1) Reverse the disassembly procedures to reassemble.
(2) ◆◆: Refer to "Service Points of Reassembly".
(3) N: Non-reusable parts

110008

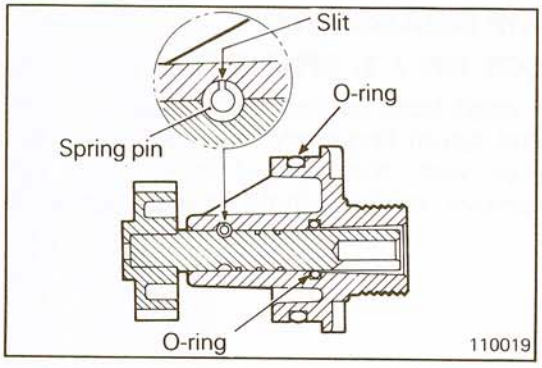

SERVICE POINT OF REASSEMBLY

1. REMOVAL OF SPRING PIN

Drive spring pin in, while making sure that slit does not face gear shaft.

NOTE
Do not reuse spring pin.

COUNTERSHAFT

N21XE- -

DISASSEMBLY AND REASSEMBLY

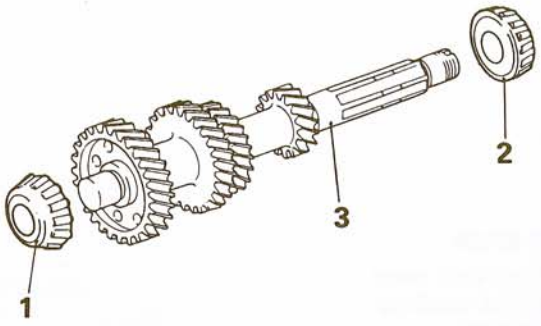

◆◆ ◆◆ 1. Counter front bearing
◆◆ ◆◆ 2. Counter center bearing
3. Countershaft gear

NOTE
(1) Reverse the disassembly procedures to reassemble.
(2) ◆◆: Refer to "Service Points of Disassembly".
(3) ◆◆: Refer to "Service Points of Reassembly".

132069

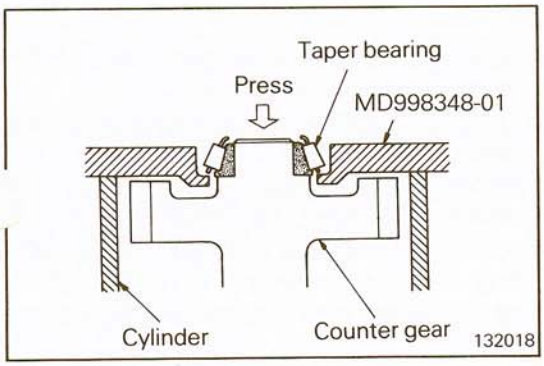

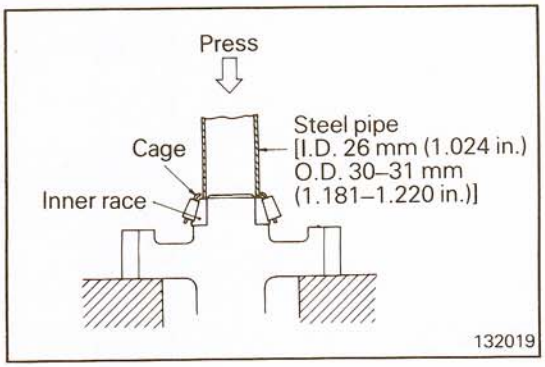

SERVICE POINTS OF DISASSEMBLY

N21XFAA

1. REMOVAL OF COUNTER FRONT BEARING / 2. COUNTER CENTER BEARING

Remove taper roller bearings installed on both ends of countershaft gear using the special tool.

SERVICE POINTS OF REASSEMBLY

N21XHAA

1. INSTALLATION OF COUNTER FRONT BEARING / 2. COUNTER CENTER BEARING

Using a steel pipe with dimensions shown in the illustration, press fit the taper roller bearings.
Be sure to set the pipe in such manner that it will press only the bearing inner race, and not the cage.

GEARSHIFT LEVER ASSEMBLY

N21YE--

DISASSEMBLY AND REASSEMBLY

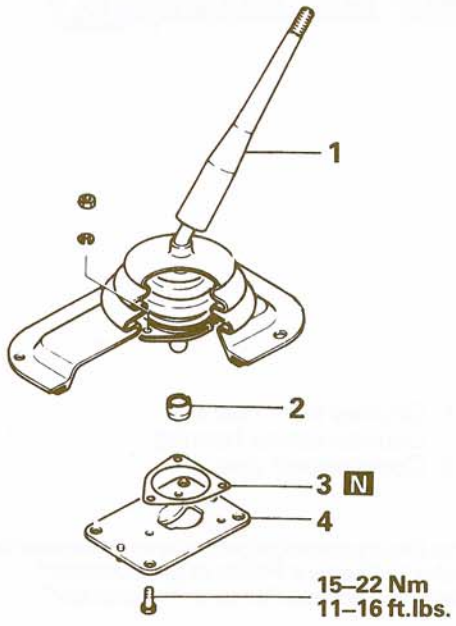

132014

Disassembly steps

1. Gearshift lever
2. Lever bushing
3. Gasket
4. Stopper plate

NOTE
(1) Reverse the disassembly procedures to reassemble.
(2) N: Non-reusable parts

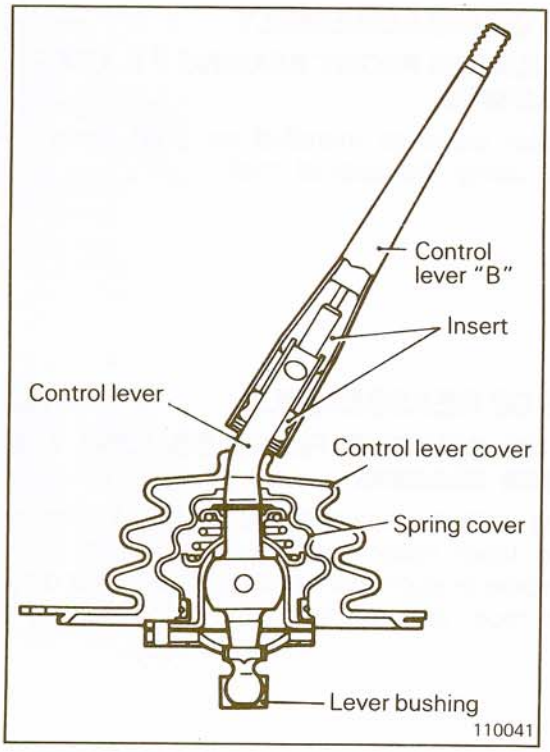

INSPECTION

N21YGAA

- Check for play between control lever and control lever "B". If play is evident, replace lever assembly.
- Push control lever in and check to ensure that it moves smoothly up and down.
- Check cover for damage and replace if necessary. T remove cover, cut away with knife. To install new cove, first apply thin coat of oil to periphery of control lever "B". Then install by sliding it down from top of lever "B".
- Check lever bushing for wear and replace if necessary.

EXTENSION HOUSING COVER

N21ZE- -

DISASSEMBLY AND REASSEMBLY

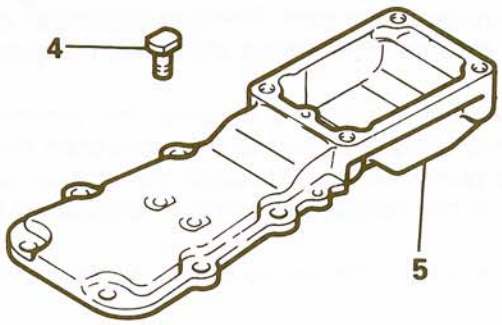

Disassembly steps

1. Nut (2)
2. Spring washer (2)
3. ◆◆ Stopper bracket
4. ◆◆ Special bolt (2)
5. Extension housing cover

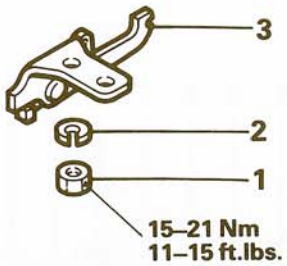

NOTE
(1) Reverse the disassembly procedures to reassemble.
(2) ◆◆: Refer to "Service Points of Reassembly".
(3) N: Non-reusable parts

132013

SERVICE POINTS OF REASSEMBLY

N21ZHAA

4. INSTALLATION OF SPECIAL BOLT

Apply recommended sealant to two special bolts (except threaded portions) and install them to cover. Do not wipe away excess sealant from cover.

Recommended sealant: 3M Liquid Gasket 8959 or equivalent

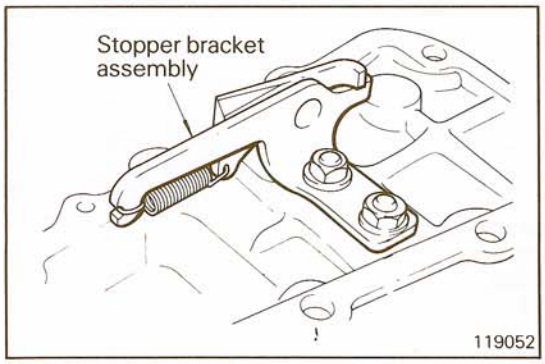

3. INSTALLATION OF STOPPER BRACKET

(1) When installing the stopper bracket, apply recommended sealant to threads of special bolts and torque nuts.

Recommended sealant: 3M Liquid Gasket 8959 or equivalent

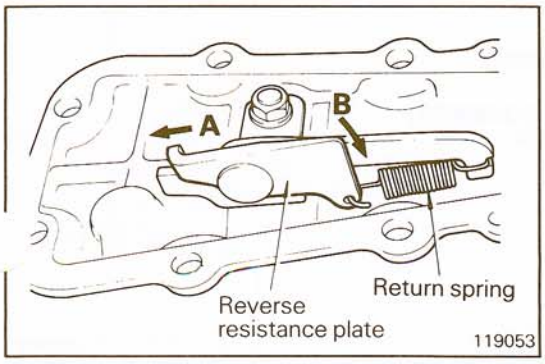

(2) Check to ensure that reverse resistance plate moves smoothly in directions A and B shown in the illustration and is brought back by return spring.

STB Revision

GENERAL INFORMATION

N21BABC

The JM600 transmission is a fully automatic unit consisting primarily of a 3 element hydraulic lock-up torque converter and three planetary gear sets. Three multiple-disc clutches, a multiple-disc brake, two brake bands and a one-way clutch provide the friction elements necessary to obtain the desired function of the thr planetary gear-sets.
A hydraulic control system is used to operate the friction elements and automatic shift controls.
The lock-up torque converter is attached to the crankshaft through a flexible drive plate and serves to directly couple the turbine and pump impeller through the lock-up piston which is controlled by the lock-up control valve. Heat generated in the torque converter is dissipated by circulating the transmission fluid through an oil-to-air type cooler.
The welded construction of the torque converter prohibits disassembly or service unless highly specialized equipment is available.

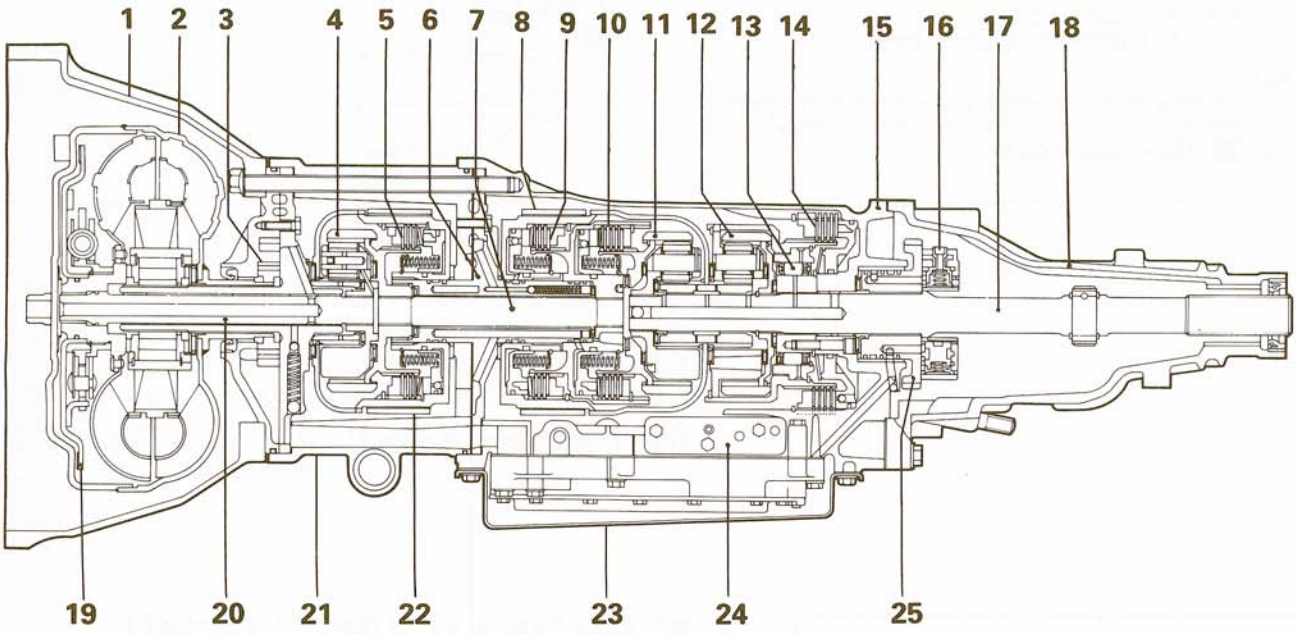

1. Converter housing
2. Torque converter
3. Oil pump
4. O.D. planetary gear
5. Direct clutch
6. Drum support
7. Intermediate shaft
8. Second band brake
9. High-reverse clutch (Front)
10. Forward clutch (Rear)
11. Front planetary gear
12. Rear planetary gear
13. One-way clutch
14. Low-reverse clutch
15. Transmission case
16. Governor valve
17. Output shaft
18. Rear extension
19. Lock-up clutch
20. Input shaft
21. O.D. case
22. O.D. brake band
23. Oil pan
24. Control valve assembly
25. Oil distributor

JAT004

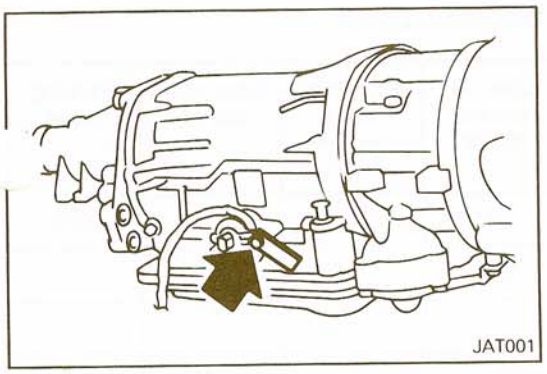
JAT001

IDENTIFICATION NUMBER

STAMPED POSITION

The plate is attached to the right hand side of transmission case.

IDENTIFICATION OF NUMBER ARRANGEMENTS

JAPAN AUTOMATIC TRANSMISSION CO., LTD
MODEL MR600
NO. 3601234

NUMBER DESIGNATION

3 6 0 1 2 3 4

- 4: Last figure denoting the year (A.D.)
- 6: Month of production
  1: Jan., 2: Feb., ...
  X: Oct., Y: Nov., Z: Dec.
- 234: Serial production number for the month

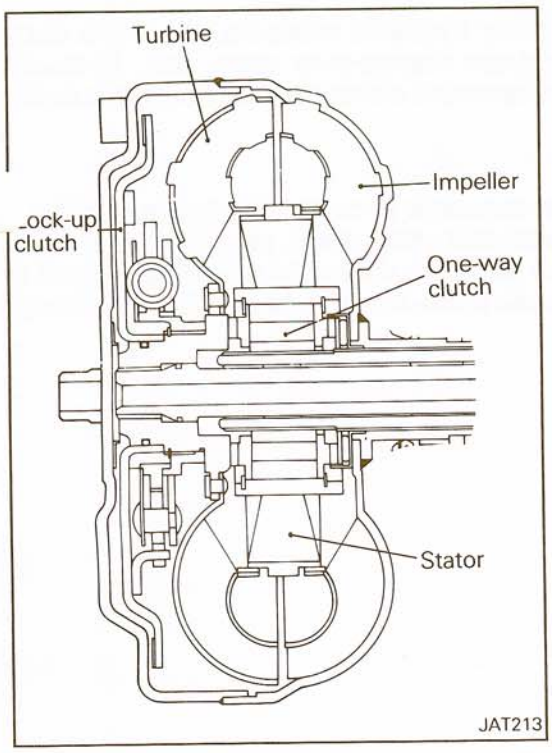

JAT213

TORQUE CONVERTER

The torque converter is with a lock-up clutch, which is designed to operate when specified vehicle speed is exceeded in the "D" range, 4th speed.

AUTOMATIC TRANSMISSION MECHANISM

The transmission mechanism consists of three sets of multiple disc clutches, two sets of band type brakes, one set of one-way clutch and single row type planetary gear and double row type (called Simpson type) planetary gear.

The three sets of clutches are the element to control input to the planetary gears and the three sets of brakes and one-way clutch are the element to fix or prevent rotation of the planetary gears. By these elements, the point at which the input is made and the gears which are to be fixed are controlled, thus giving the gear change ratio meeting the driving conditions.

When and which element operates is shown in the Element in Use at Each Position of Selector Lever.

Element in Use at Each Position of Selector Lever

Selector lever position	Gear	Direct clutch	O.D. band brake	High-reverse clutch	Forward clutch	Low & reverse brake	2nd band brake Apply	One-way clutch	Parking pawl
Park	Neutral	ON				ON			ON
Reverse	Reverse	ON		ON		ON			
Neutral	Neutral	ON							
D	First	ON			ON			ON	
	Second	ON			ON		ON		
	Third	ON		ON	ON				
	Fourth (O.D.)		ON	ON	ON				
2	Second	ON			ON		ON		
L	First	ON			ON	ON		ON	

HYDRAULIC CONTROL SYSTEM

The hydraulic control system consists of an oil pump that generates hydraulic pressure, the valve body assembly incorporating a hydraulic pressure control valve, oil passage change-over valve, etc., hydraulic piston to operate the clutches and brakes, etc. These elements are operated either manually or hydraulically to control the planetary gears.

OIL PUMP

The oil pump generates hydraulic pressure to supply oil to the torque converter or control the hydraulic conti system and to lubricate the planetary gear sets, overrunning clutch and other parts requiring lubrication. The oil pump is an internal/external gear pump of which drive gear is driven by the pump drive hub welded at the center of the torque converter shell, constantly developing hydraulic pressure while the engine is running.

PRESSURE REGULATOR VALVE

The pressure regulator valve automatically regulates the hydraulic pressure supplied to each element to a pressure (line pressure) according to current vehicle speed and engine output (throttle valve opening).

MANUAL VALVE

This valve provides switching of oil ways that is linked to the selector lever. The valve causes either P, R, N, D, 2 or L range to be selected according to the lever operation.

1ST-2ND SHIFT VALVE

This valve automatically switches oil ways between the 1st and 2nd speeds according to the governor pressure and throttle pressure.

2ND-3RD SHIFT VALVE

This valve automatically switches oil ways between the 2nd and 3rd speeds according to the governor pressure and throttle pressure.

PRESSURE MODIFIER VALVE

This valve controls the throttle pressure acting on the pressure regulator valve to reduce line pressure when the vehicle is running at high speed.

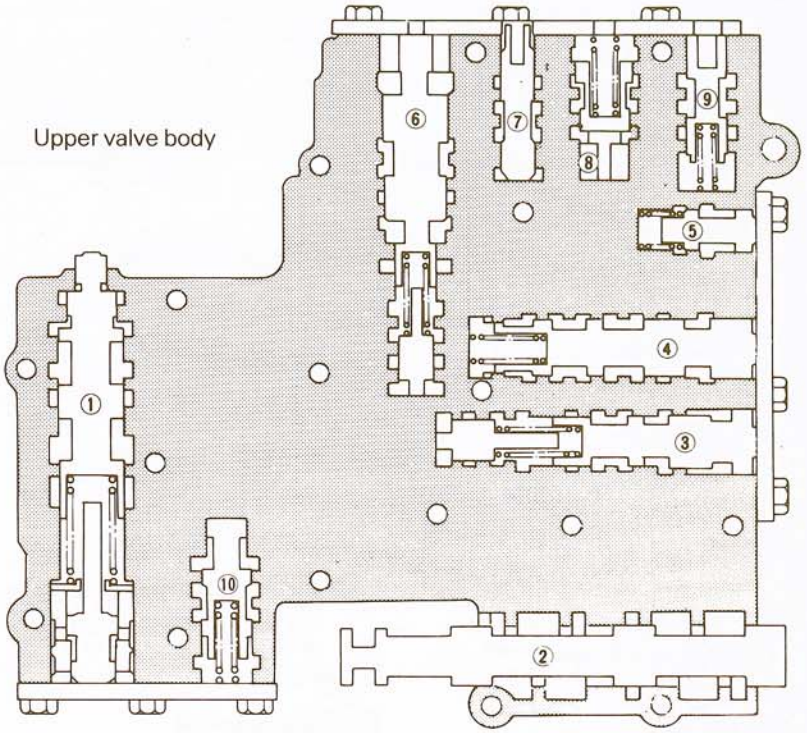

1. Pressure regulating valve
2. Manual valve
3. 2nd-3rd shift valve
4. 1st-2nd shift valve
5. Pressure modifier valve
6. 3rd-4th shift valve
7. Vacuum throttle valve
8. Throttle back-up valve
9. Solenoid downshift valve
10. Second lock valve

JAT005

3RD-4TH SHIFT VALVE

This valve automatically switches oil ways between the 3rd and 4th speeds according to the governor pressure and throttle pressure.

VACUUM THROTTLE VALVE

This valve converts change in the manifold negative pressure (throttle valve opening) into change in hydraulic pressure. As the manifold negative pressure decreases (the throttle opening increases), the valve causes the throttle pressure to increase.

THROTTLE BACK-UP VALVE

This valve backs up the throttle valve in its small opening range to eliminate delay of the engine brake operation that would otherwise be caused when "2" or "L" range is selected.

SOLENOID DOWNSHIFT VALVE

This valve driven by the downshift solenoid supplies line pressure to the 1st-2nd shift valve, 2nd-3rd shift valve and 3rd-4th shift valve.

SECOND LOCK VALVE

This valve helps the shift valve to lock the 2nd speed in "2" range.

3-2 TIMING VALVE

This valve controls release of the release side pressure of the second band servo for smooth kickdown according to the vehicle speed.

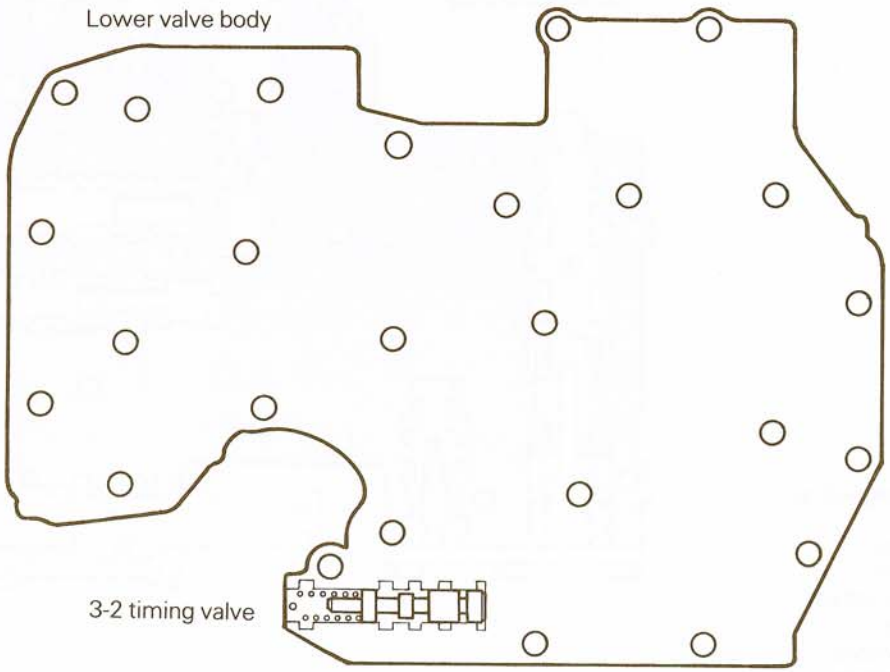

JAT197

O.D. CANCEL VALVE

This valve driven by the line pressure that is controlled by the O.D. cancel solenoid switches oil ways of line pressure that acts on the direct clutch and O.D. band servo.

' OCK-UP CONTROL VALVE

,his valve driven by the governor pressure controls the lock-up clutch operation.

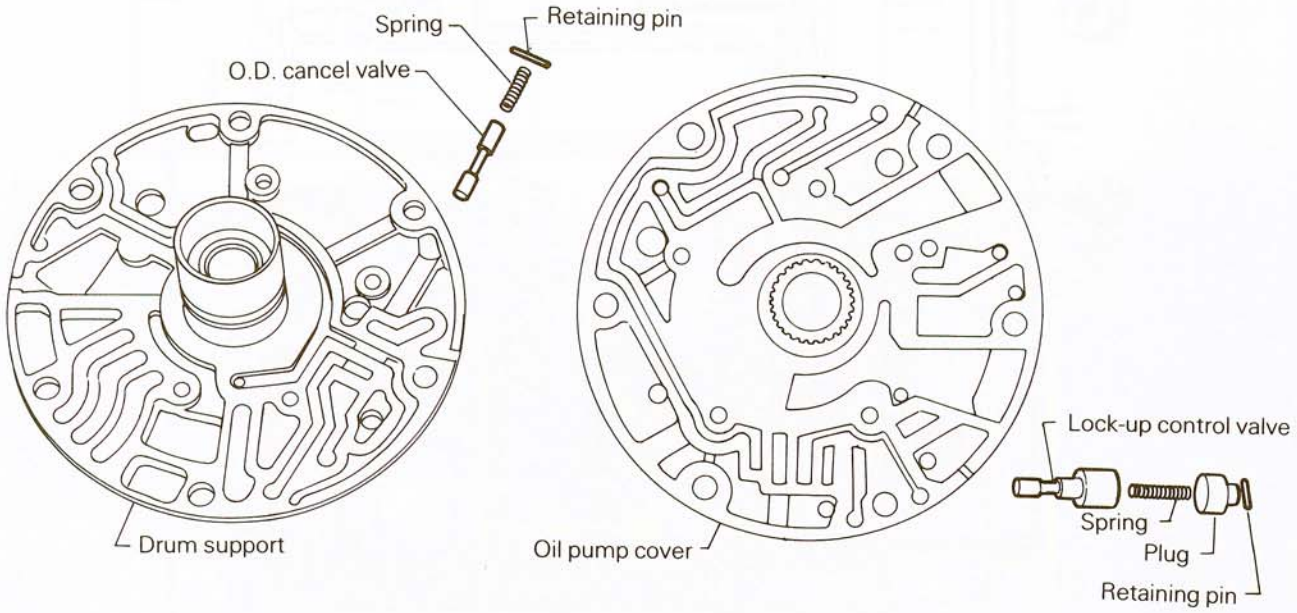

JAT006

HYDRAULIC CONTROL CIRCUIT

"N" (NEUTRAL)

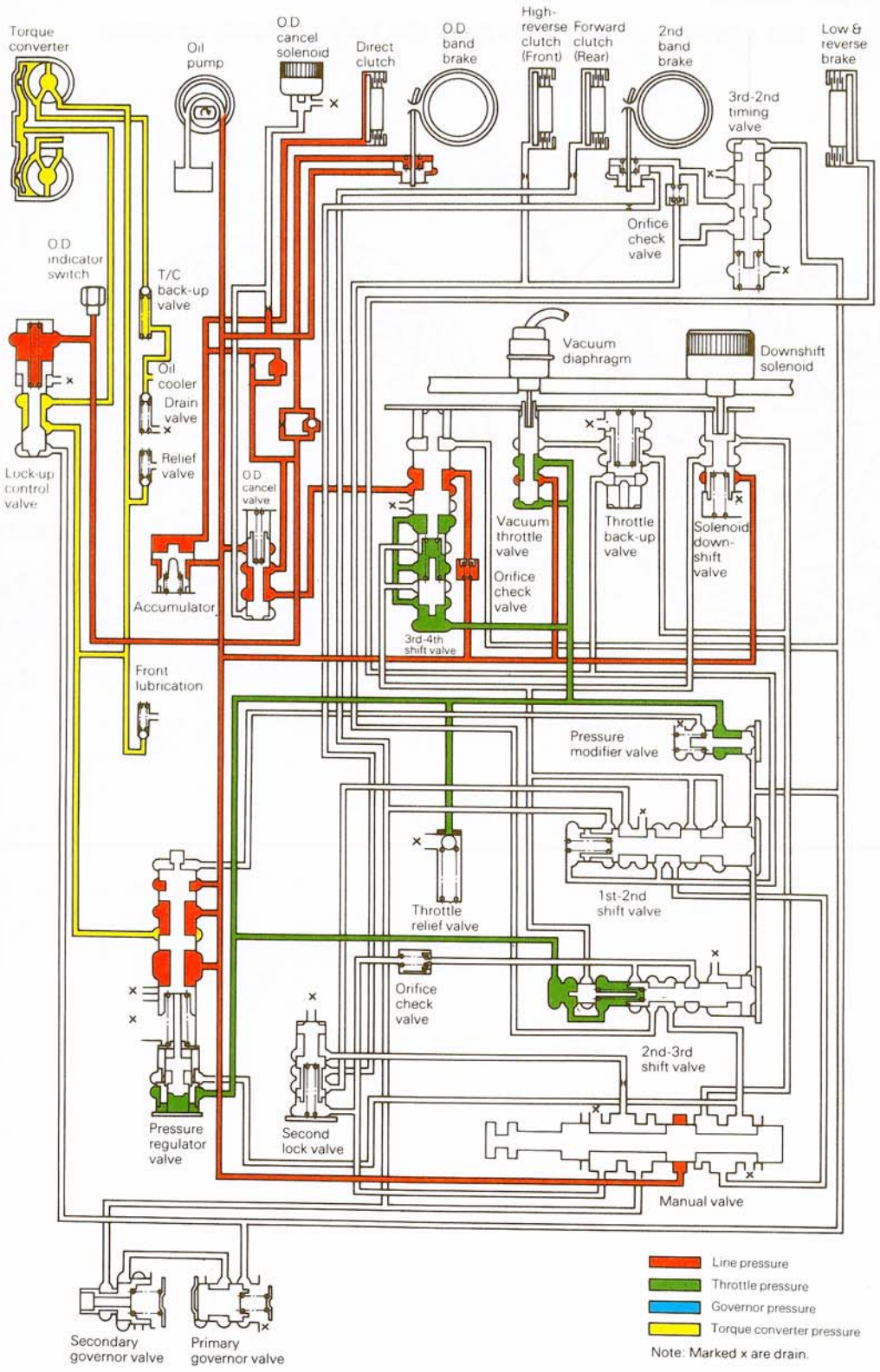

JAT198

STB Revision

"P" (PARKING)

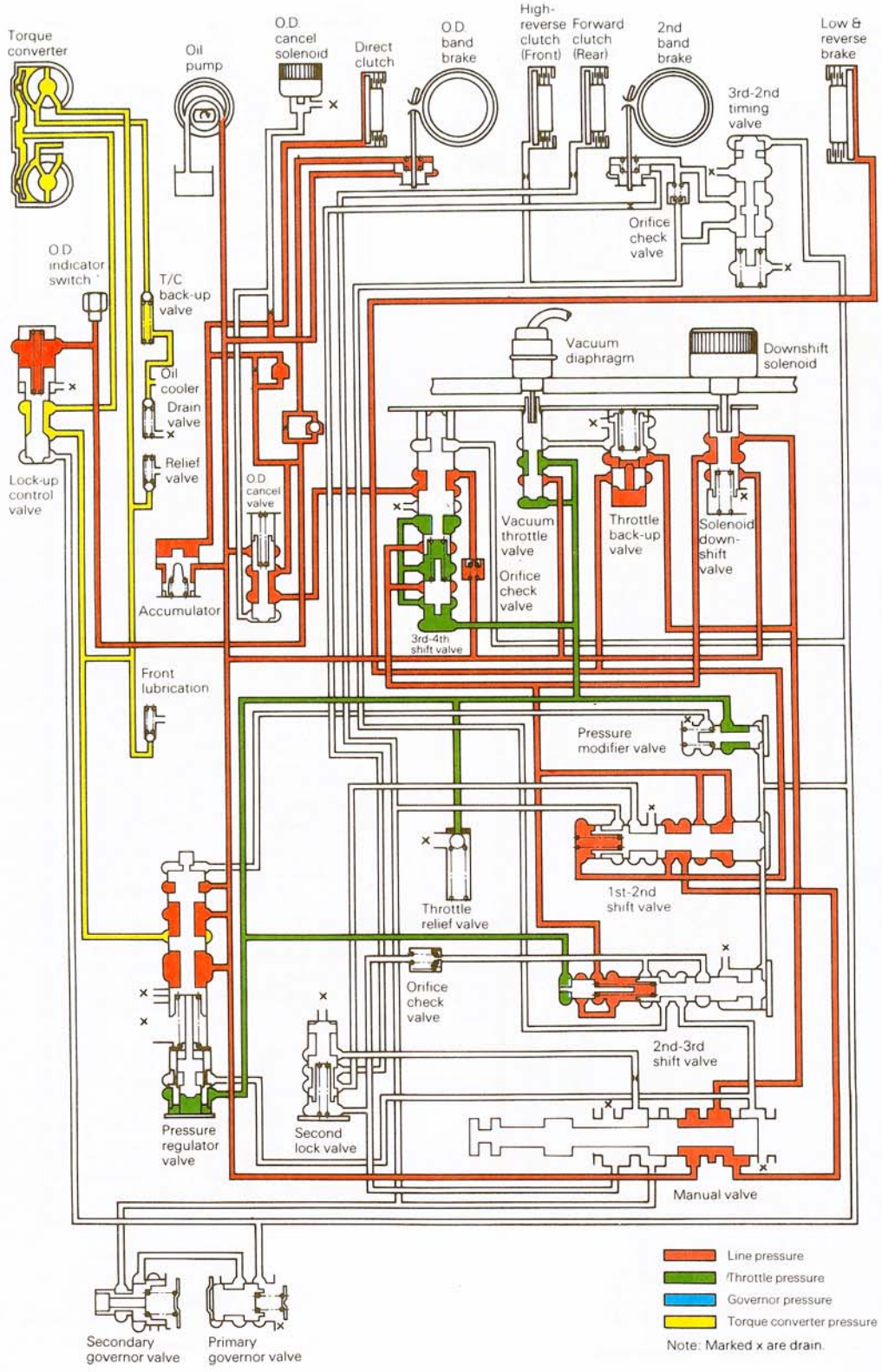

JAT199

"D" (DRIVE) – FIRST

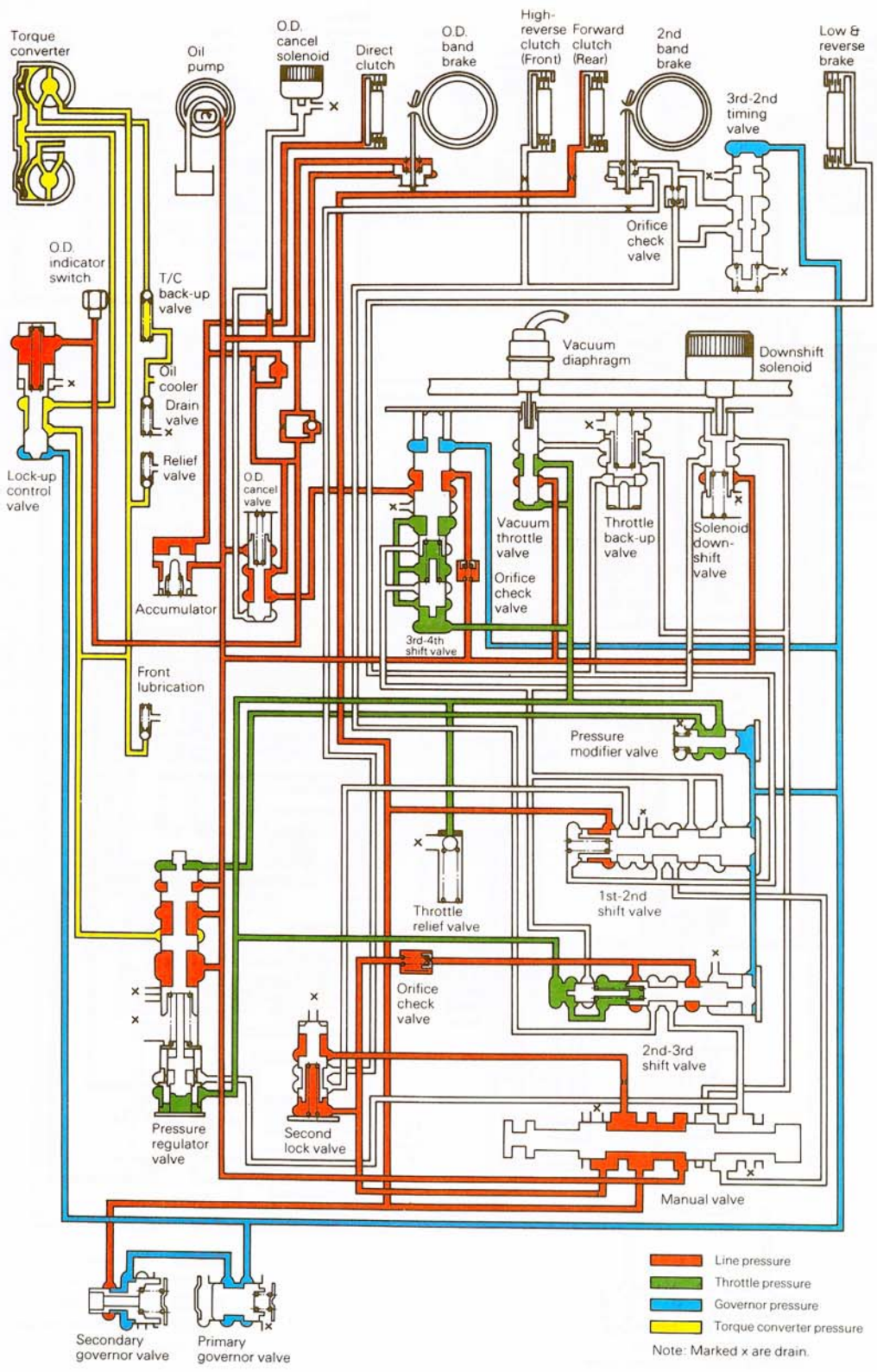

JAT201

"D" (DRIVE) – SECOND

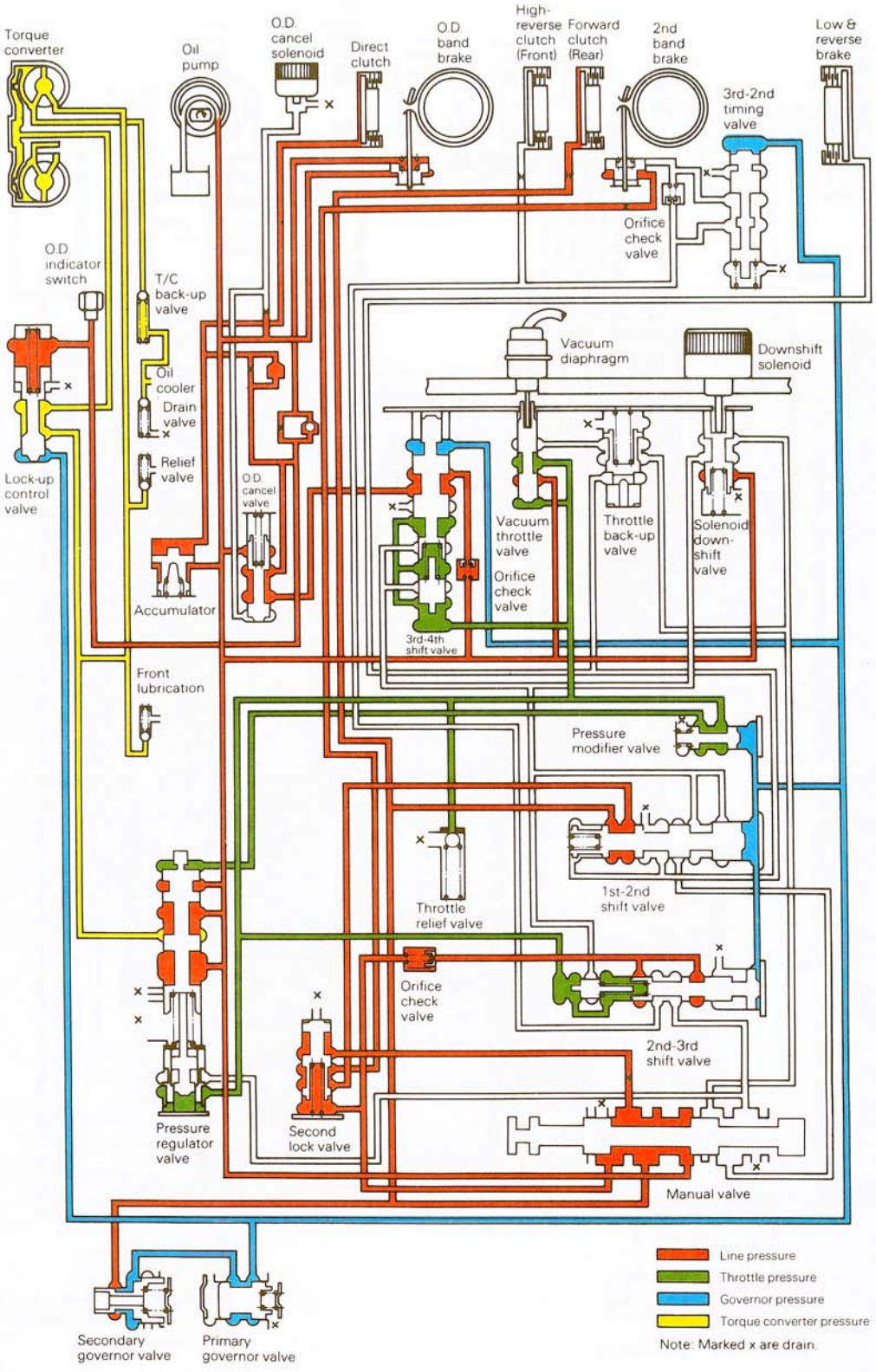

JAT202

"D" (DRIVE) – THIRD, O.D. SOLENOID IN OPERATION

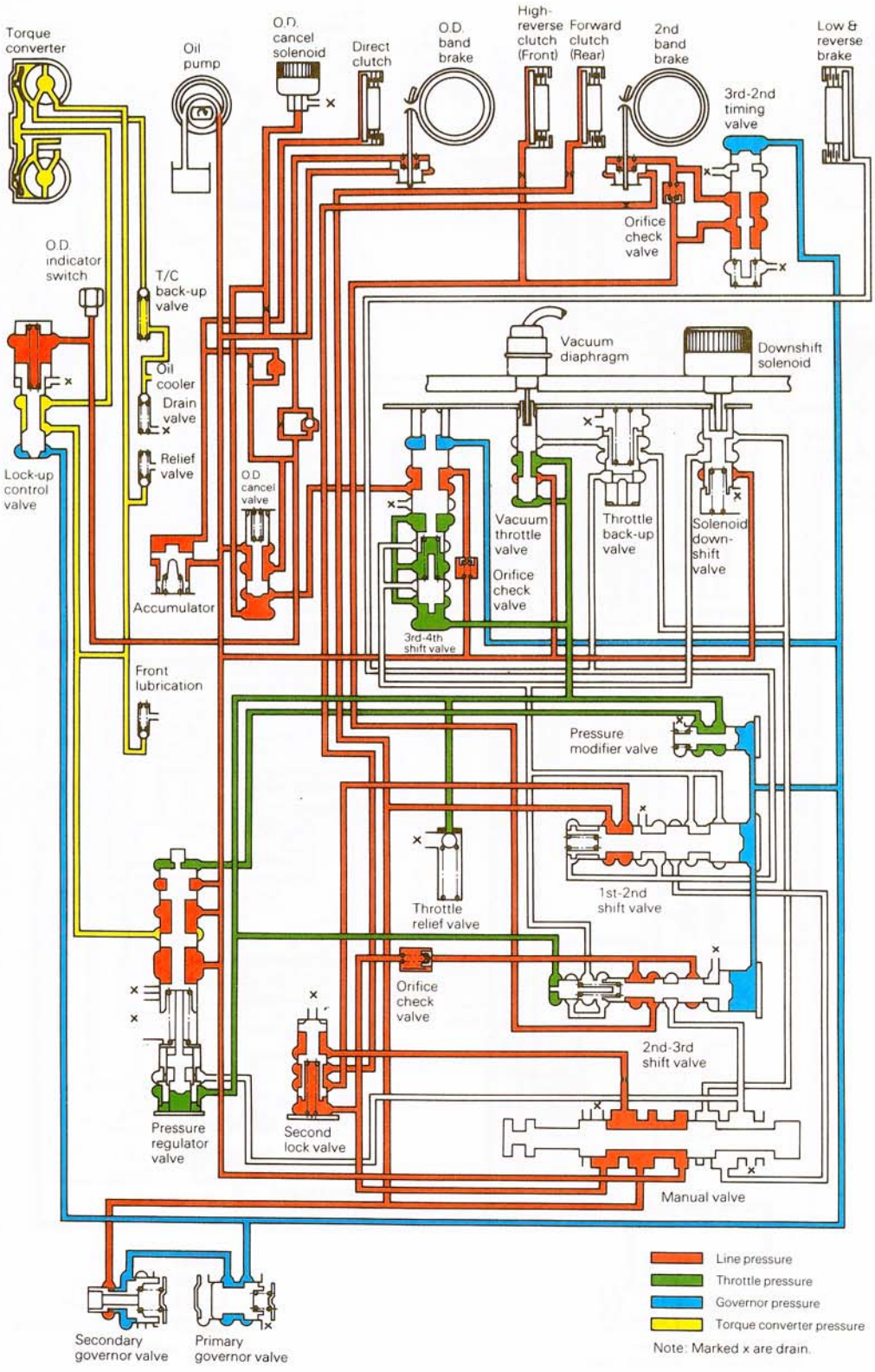

JAT203

STB Revision

"D" (DRIVE) – FOURTH, TORQUE CONVERTER LOCKED UP

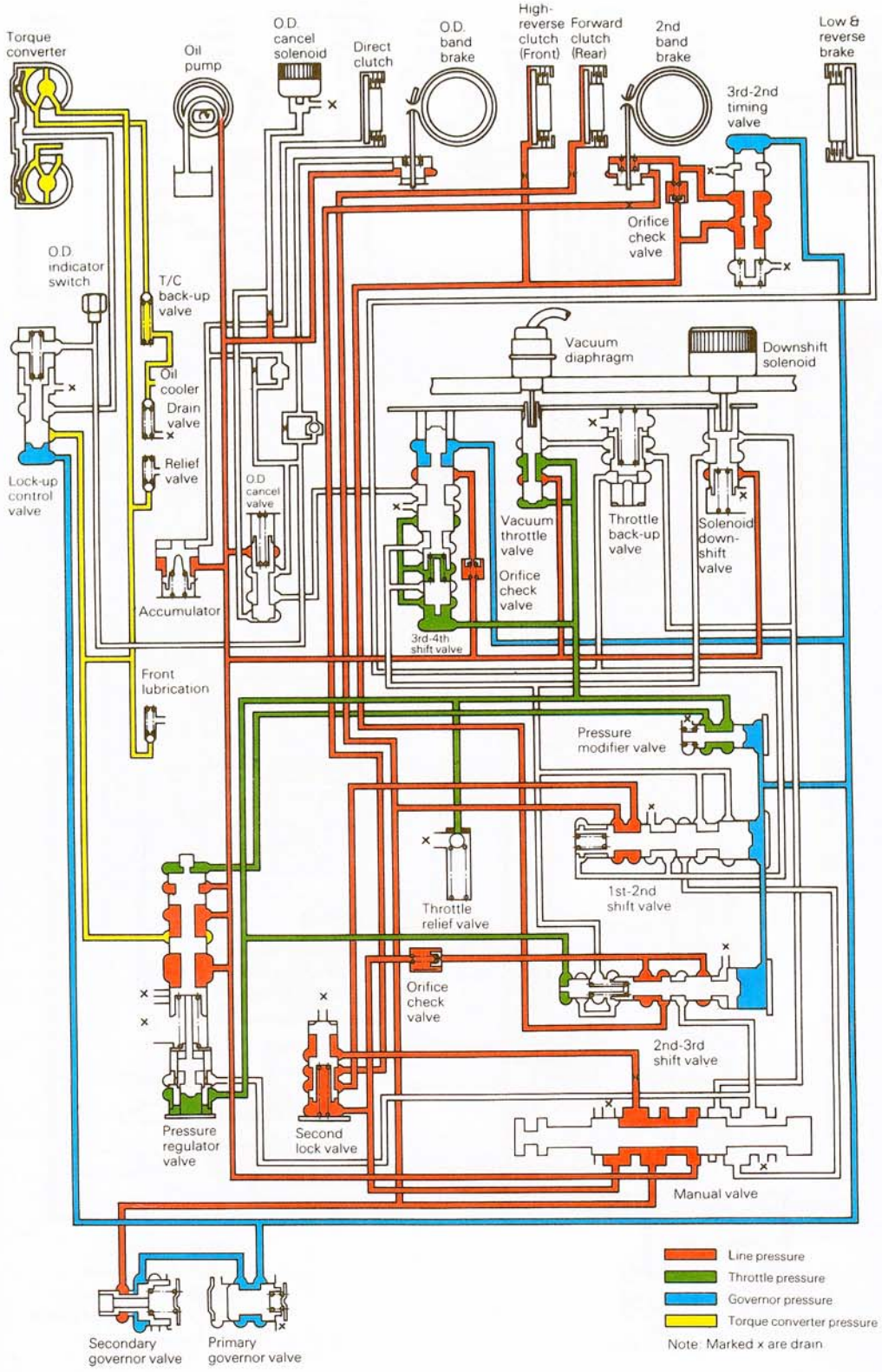

JAT204

"D" (DRIVE) – KICKDOWN

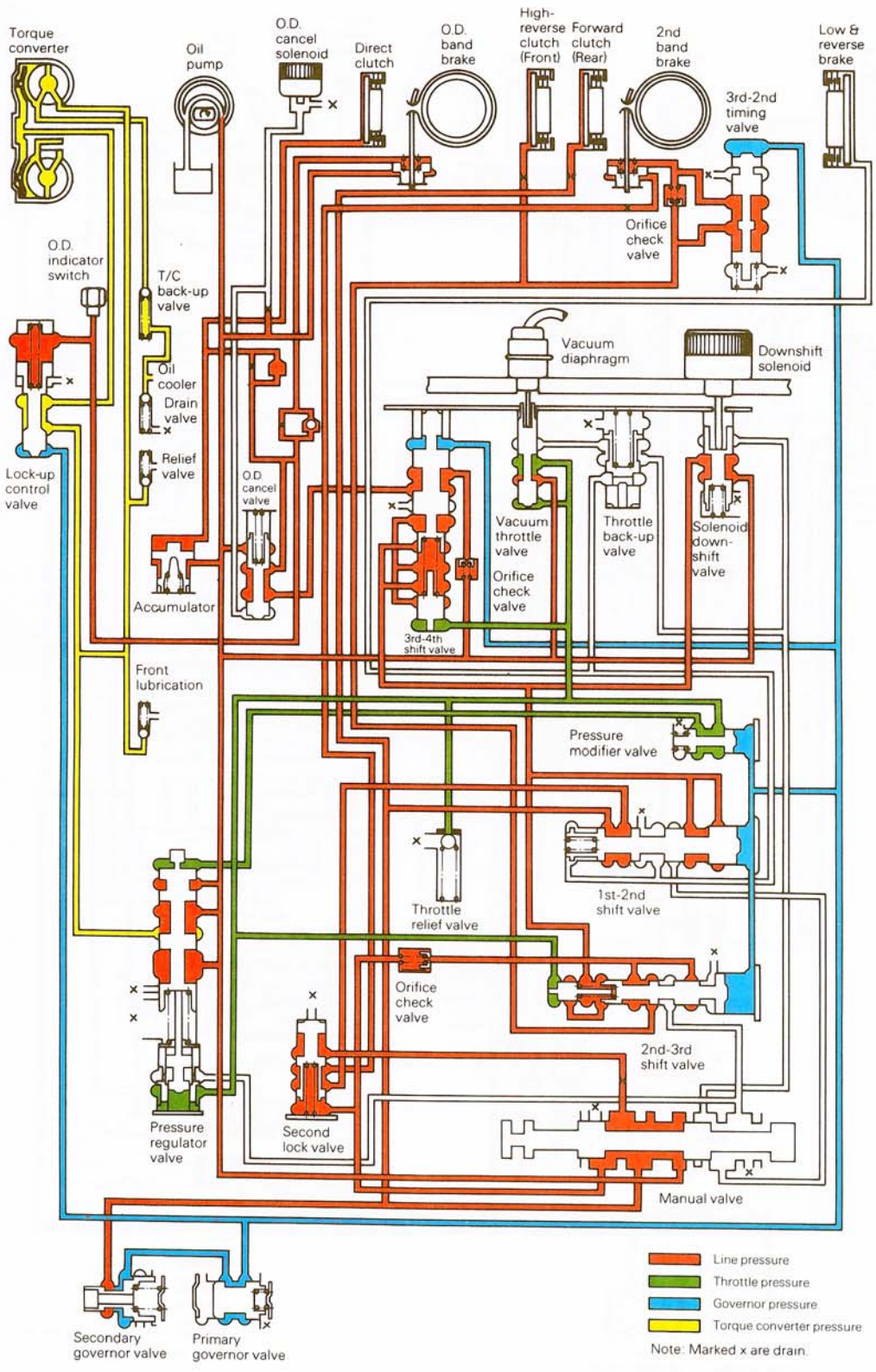

JAT205

STB Revision

"2" (SECOND) – FIRST

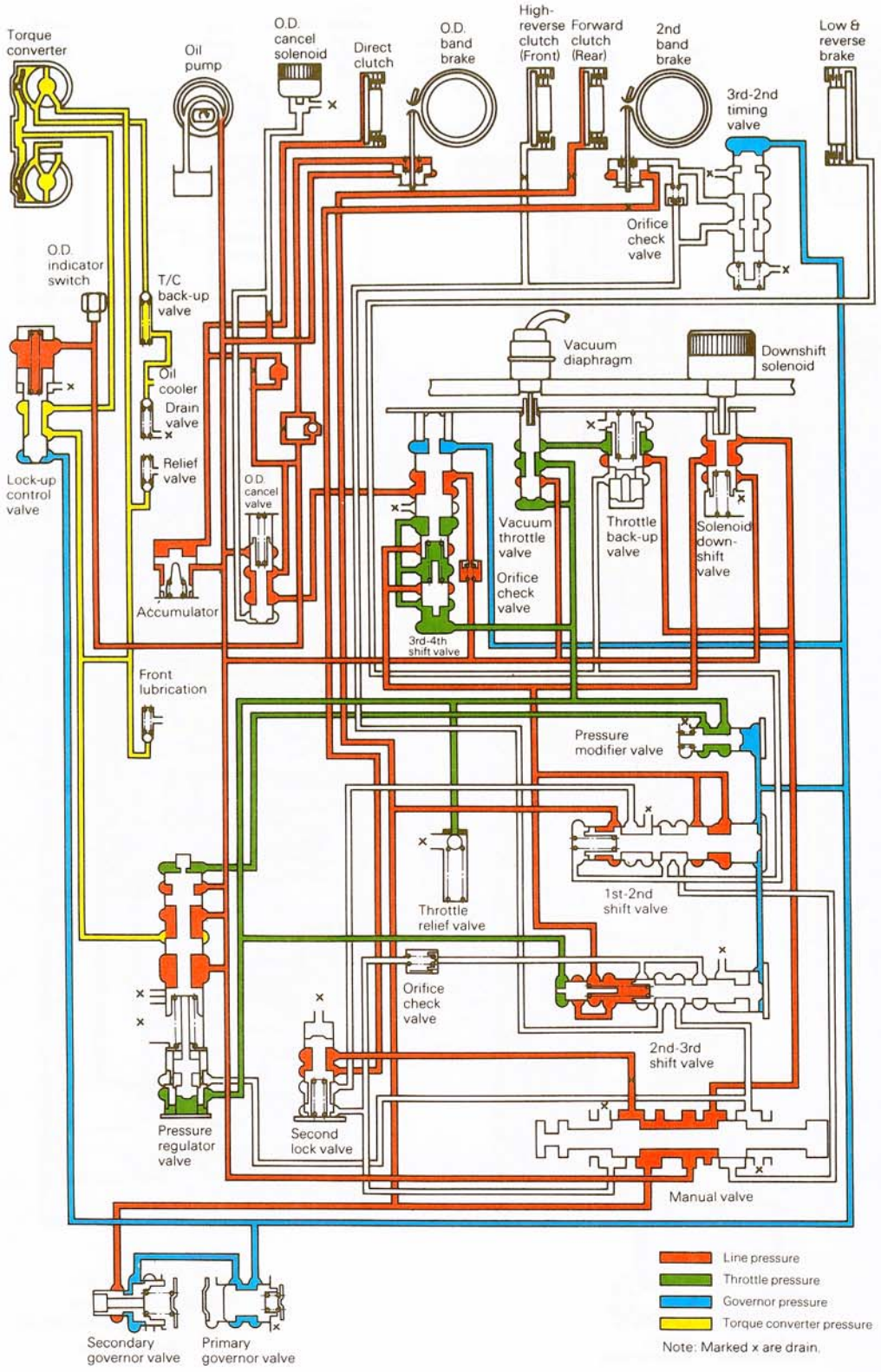

JAT206

"L" (LOCK-UP)

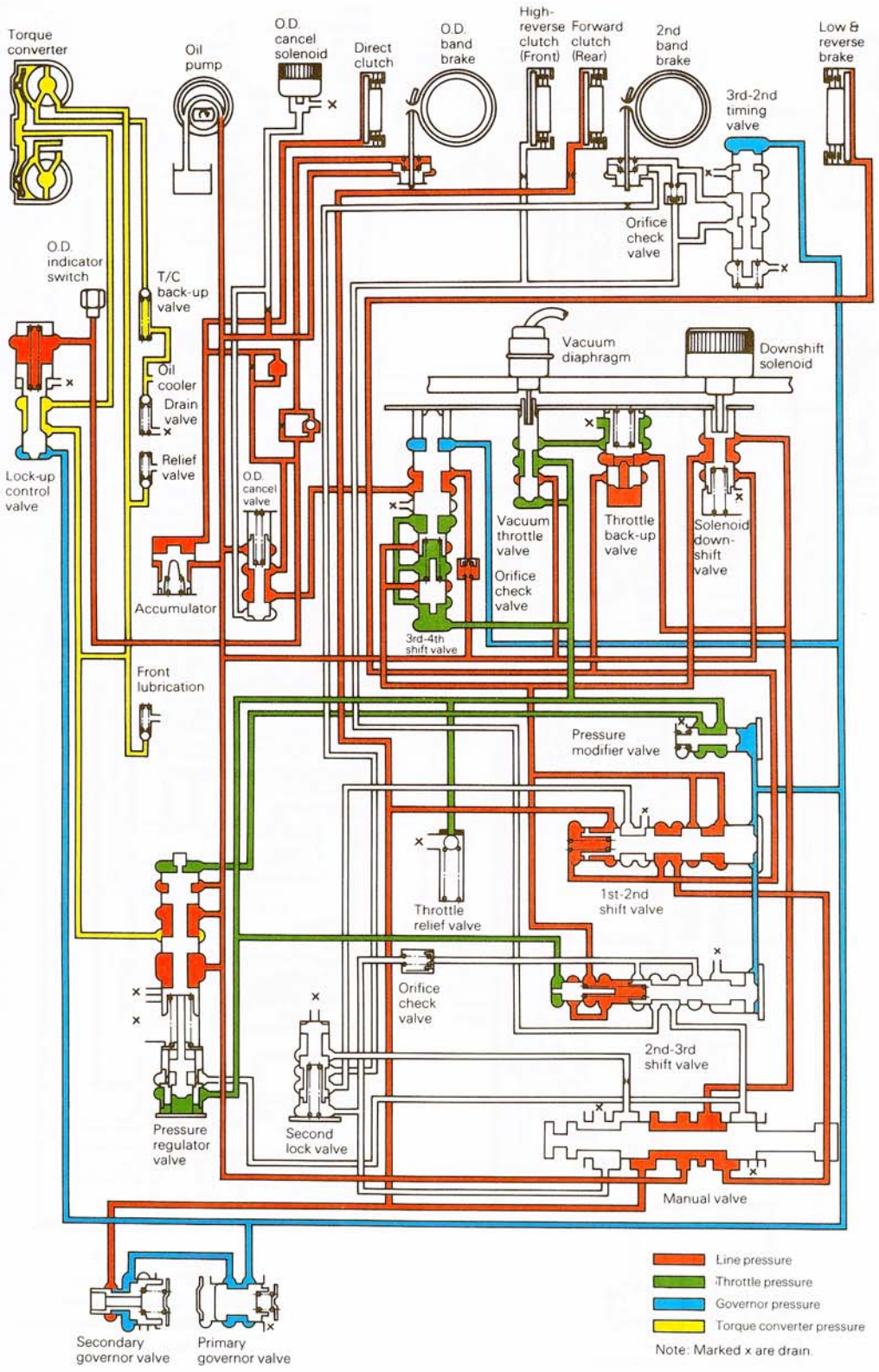

JAT208

STB Revision

"R" (REVERSE)

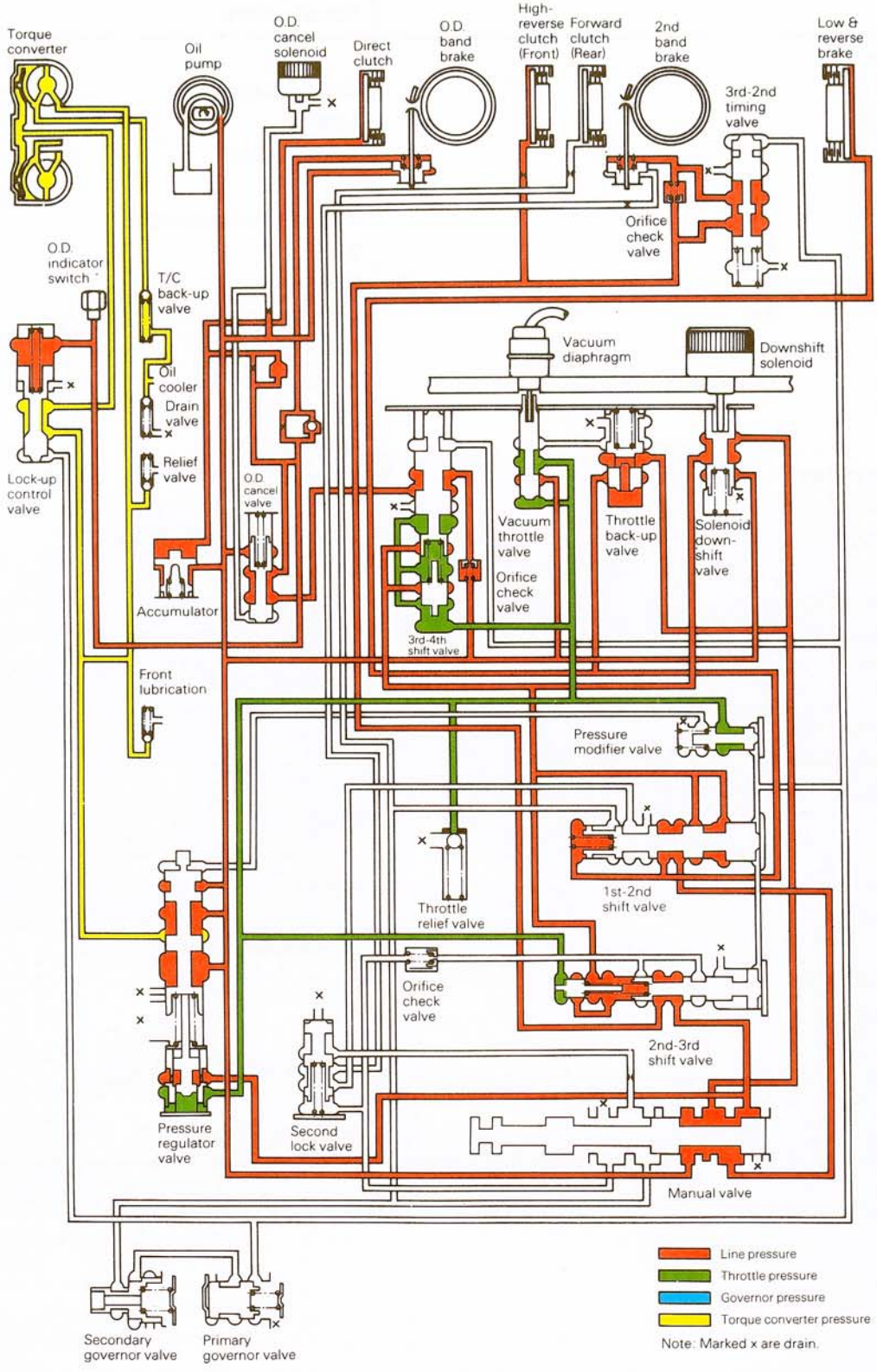

JAT200

SPECIFICATIONS

N21CA- -

GENERAL SPECIFICATIONS

Items		Specifications
Torque converter		
Type		With lock-up clutch
Stall torque ratio		1.84 : 1
Stall speed rpm		2,350 – 2,650
Transmission		
Type		4-speed, Full-automatic
Gear ratio	1st	2.458
	2nd	1.458
	3rd	1.000
	4th	0.686
	Reverse	2.182
Direct clutch		
Type		Multiple-disc
No. of drive plates		2
No. of driven plates		2
High-reverse clutch		
Type		Multiple-disc
No. of drive plates		3
No. of driven plates		5
Forward clutch		
Type		Multiple-disc
No. of drive plates		6
No. of driven plates		6
Overdrive brake		
Type		Band
Second brake		
Type		Band
Low/reverse brake		
Type		Multiple-disc
No. of drive plates		6
No. of driven plates		6
Oil pump		
Type		Internal-external gear type
Driven by		Engine
Oil cooler		Oil-to-water type

SERVICE SPECIFICATIONS

N21CB--

Items	Standard	Limit
Engine idle speed rpm	850 ± 100	–
Stall speed rpm	2,350 – 2,650	–
Direct clutch clearance mm (in.)	1.6 – 1.8 (0.063 – 0.071)	–
High-reverse clutch clearance mm (in.)	1.6 – 2.0 (0.063 – 0.079)	–
Forward clutch clearance mm (in.)	0.8 – 1.6 (0.031 – 0.063)	–
Low-reverse brake clearance mm (in.)	0.80 – 1.25 (0.031 – 0.049)	–
Front end play mm (in.)	0.5 – 0.8 (0.020 – 0.031)	–
Front total end play mm (in.)	0.25 – 0.50 (0.010 – 0.020)	–
O.D. pack end play mm (in.)	0.5 – 0.8 (0.020 – 0.031)	–
O.D. total end play mm (in.)	0.25 – 0.50 (0.010 – 0.020)	–
Clearance between oil pump outer gear and crescent mm (in.)	0.14 – 0.21 (0.0055 – 0.0083)	0.25 (0.0098)
Clearance between oil pump outer gear and housing mm (in.)	0.05 – 0.20 (0.0020 – 0.0079)	0.25 (0.0098)
Oil pump gear end play mm (in.)	0.02 – 0.04 (0.0008 – 0.0016)	0.08 (0.0031)

TORQUE SPECIFICATIONS

N21CC--

Items	Nm	ft.lbs.
Transmission installation		
Drive plate to crankshaft	128 – 138	94 – 100
Drive plate to torque converter	56 – 62	42 – 46
Converter housing to engine	43 – 54	31 – 39
Component part		
Converter housing mounting bolt	44 – 54	33 – 40
Rear extension mounting	20 – 25	14 – 18
Oil pan bolt	6 – 8	4.4 – 5.7
2nd servo piston retainer to transmission case	7 – 9	5 – 6
2nd piston stem (when adjusting band brake)	7 – 10 [Turn back two turns after tightening]	5 – 7 [Turn back two turns after tightening]
2nd piston stem lock nut	15 – 39	11 – 29
One-way clutch inner race tightening bolt	13 – 18	9 – 13
Control valve body mounting bolt	5.4 – 7.4	4.0 – 5.4
Lower valve body to upper valve body	2.5 – 3.4	1.8 – 2.5
O.D. servo cover to retainer	5 – 7	3.6 – 5.1
O.D. servo piston retainer to O.D. case	10 – 15	7 – 11
O.D. stem (when adjusting band brake)	7 – 10	5 – 7
O.D. stem lock nut	15 – 39	11 – 29
Governor tube	15 – 18	11 – 13

Items	Nm	ft.lbs.
Side plate to control valve body	2.5 – 3.4	1.8 – 2.5
Nut for control valve reamer bolt	5 – 7	3.6 – 5.1
Oil strainer to lower valve body	3 – 4	2.2 – 2.9
Governor valve body mounting bolt	5 – 7	3.6 – 5.1
Oil pump housing to oil pump cover	6 – 8	4.3 – 5.8
Cross-shaft to cross-shaft lever	18 – 24	13 – 17
Shaft to detent plate	13	9.4
Inhibitor switch mounting bolt	5 – 7	3.6 – 5.1
Manual shaft lock nut	29 – 39	22 – 29
Oil cooler pipe to transmission case	29 – 49	22 – 36
Test plug (oil pressure inspection hole)	5 – 10	3.6 – 7.2
Support actuator (parking rod inserting position) to rear extension	8 – 11	5.8 – 8.0
Drum support to O.D. case	7 – 9	5.1 – 6.5
Downshift solenoid	5	3.6
Vacuum diaphragm	1.4 – 3.5	1.1 – 2.5
O.D. solenoid	4	2.9
Flange yoke attaching bolt	50 – 60	36 – 43

LUBRICANTS

N21CD- -

Items	Specified lubricant	Quantity
Automatic transmission fluid lit. (U.S.qts., Imp.qts.)	DEXRON II type	7.0 (7.4, 6.2)
Sliding parts of selector lever	Multipurpose grease SAE J310, NLGI No. 2	Small amount

SPECIAL TOOLS

N21DA- -

Tool (Number and name)	Use	Tool (Number and name)	Use
MD998394 Oil pressure gauge adaptor 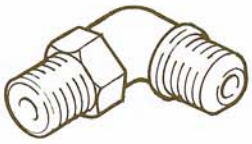	Use with oil pressure gauge	MD998392 Hex-head extension 	Loosening and tightening of one-way clutch inner race bolt
MD998393 Guides 	Assembly of oil pump and O.D. case	MD998391 Clutch spring compressor 	Assembly and disassembly of clutch
MD998330-01 Oil pressure gauge 	Measurement of oil pressure	MD998390 Sliding hammer 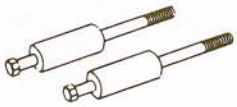	Removal of oil pump

TROUBLESHOOTING

N21EBAD

PRELIMINARY CHECKS (Prior to road testing)

VERIFY CUSTOMER COMPLAINT

The customer should supply as much information as possib. including any unusual characteristics that accompany the complaint.

FLUID LEVEL

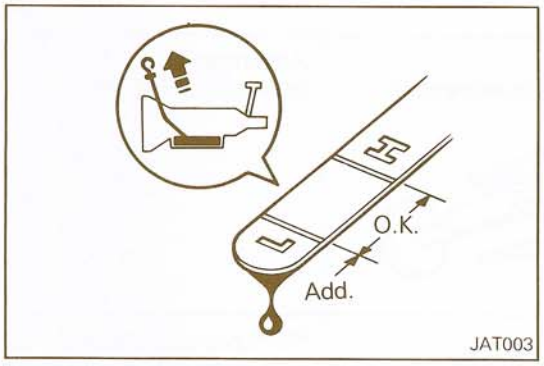

1. Drive the car several miles (kilometers) to bring the transmission up to normal operating temperature [50 to 80°C (122 to 176°F)].
2. Park the car on a level surface.
3. Put wheel chocks in place, apply parking brake securely and leave the engine running.
4. Slowly move the selector lever through the entire shift pattern, and return it to "N" neutral.
5. Remove the dipstick, clean it, and replace it fully in the filler tube.
6. Quickly remove it again and read the level.
   Keep the fluid at the proper level. Overfilling may blow off the fluid during high-speed driving. Underfilling may cause the clutches to slip, and burn.
   the "L" mark on the dipstick indicates the transmission is approximately 0.4 liter (7/8 U.S.pt, 3/4 Imp.pt.) low.
   Add only clean DEXRON II type transmission fluid.

FLUID LEAKAGE

To detect a fluid leak:
1. Raise car.
2. Clean area suspected of leaking.
3. Start engine, apply foot brake, place gear selector in drive, and wait a few minutes.
4. Stop engine.
5. Check for fresh leakage.

If the transmission breather is suspected:
1. Raise car.
2. Clean the area around the breather.
3. Run the car at highway speeds.
4. Check the breather for fresh leakage.

FLUID CONDITION

Transmission fluid color and texture can aid greatly in transmission troubleshooting. When checking fluid level, examine the transmission fluid and note its color, texture, and odor. Some common forms of contamination are listed below:

Dark or Black Fluid:
With a burned odor – Worn friction material.

Milky Pink Fluid: Water contamination
– Road water entering through filler tube or breather.

Varnished Fluid, Light to Dark Brown and Tacky: Oxidation
– Over or underfilling.
– Overheating.

ENGINE IDLE SPEED

Check and adjust idle speed to specifications.

Standard value: 850 ± 100 rpm

ENGINE OIL AND COOLANT LEVELS

Prior to road testing, check engine oil and coolant levels, and fill as necessary.

SHIFT LINKAGE

Start in Park position, depress detent button and slowly move the gear selector through all ranges. The detent "clicks" should correspond with the range indicator.

DIAGNOSTIC ROAD TEST

Prior to road testing, perform the preliminary inspections outlined earlier. If the car is not equipped with a tachometer, install a portable tachometer in the car. And also install a suitable vacuum gauge and pressure gauge. If the customer has a specific complaint, select road conditions similar to those described. (e.g. steep hills, freeways, etc.)
Follow the test sequence as outlined in this section and mark the results on the Symptom Chart on page 21-64. It may be necessary to repeat sections of the test under different throttle conditions (e.g. light, medium or full throttle). After completing the road test, compare the test results to the Troubleshooting Chart on page 21-60.

ROAD TESTING

PARK RANGE

Place the selector lever in "P" range and start the engine. Stop the engine and repeat the procedure in all other ranges and neutral. In park, the car should be locked in position, unable to roll or move. Mark all results on the Symptom Chart.

REVERSE

Manually shift the selector lever from "P" to "R", and note shift quality. Drive the car in reverse long enough to detect slippage or other abnormalities. Note results.

NEUTRAL

Manually shift the selector lever from "P" to "N" and note quality. In neutral, there should be no movement. Note results.



DRIVE RANGE

Manually shift the selector lever to range "D", and note shift quality. Drive the car through all automatic shifts and in all gear ranges. Note shift quality and timing [km/h (MPH)], and check whether torque converter is locked up or not at specif speed. Check for slippage, noise, or other abnormal conditions. If necessary, drive the test sequence under different throttle opening (e.g. light, medium or full throttle).

Check overdrive range for slippage, noise, or other abnormal conditions. Maintain a constant speed of 56 to 64 km/h (35 to 40 MPH) on a level surface and turn the O.D. switch on the console "ON" and "OFF". The transmission should upshift immediately when the switch is turned "ON", and downshift immediately when the switch is turned "OFF".

Because the shock is very low and is not noticeable when the torque converter is locked up, it is difficult to confirm whether the torque converter is locked up or not. So please check the engine rpm with tachometer while the car is driving to confirm it. If the torque converter is locked up the engine rpm is decreased 200 to 400 rpm at the same time.

Lock-up zone: Refer to Shift Schedule on page 21-56.

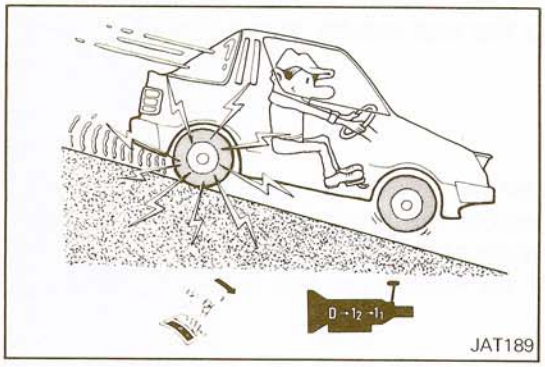

RANGE "2"

Manually shift the selector lever to range "2". Check for slippage, hesitation or abnormal condition. The transmission should remain in 2nd gear regardless of car speed or engine revolutions. Note results.

RANGE "L"

Manually shift the selector lever to range "L". Note shift quality. It should, however, downshift immediately to 2nd gear and downshift again to 1st gear as road speed decreases. Accelerate and decelerate in 1st gear to determine engine revolutions. Note results.

The transmission should not shift into 1st gear from "D" range if the car road speed is above approximately 50 km/h (30 MPH).

Record line pressure at each range and at each throttle vacuum in accordance with the pressure testing described below.

CAR SPEED AND LINE PRESSURE WHEN SHIFTING GEARS

VAC kPa (mmHg, in.Hg)	Gearshift	Car speed km/h (MPH)	Output shaft speed rpm
-46.7 (+350, +13.8)	$D_1 \rightarrow D_2$	59 – 68 (37 – 42)	1,800 – 2,100
	$D_2 \rightarrow D_3$	101 – 111 (63 – 69)	3,100 – 3,400
	$D_3 \rightarrow D_4$	–	–
	$D_4 \rightarrow D_3$	–	–
	$D_3 \rightarrow D_2$	83 – 93 (52 – 58)	2,550 – 2,850
	$D_2 \rightarrow D_1$	44 – 54 (27 – 34)	1,350 – 1,650
0 (0, 0)	$D_1 \rightarrow D_2$	23 – 33 (14 – 21)	700 – 1,000
	$D_2 \rightarrow D_3$	67 – 80 (42 – 50)	2,050 – 2,450
	$D_3 \rightarrow D_4$	98 – 114 (61 – 71)	3,020 – 3,520
	$D_4 \rightarrow D_3$	54 – 71 (34 – 44)	1,670 – 2,170
	$D_3 \rightarrow D_2$	34 – 50 (21 – 31)	1,050 – 1,550
	$D_2 \rightarrow D_1$	11 – 20 (7 – 12)	350 – 600
–26.7 (–200, –7.9)	$D_1 \rightarrow D_2$	16 – 26 (10 – 16)	500 – 800
	$D_2 \rightarrow D_3$	20 – 33 (12 – 21)	600 – 1,000
	$D_3 \rightarrow D_4$	41 – 57 (25 – 35)	1,260 – 1,760
	$D_4 \rightarrow D_3$	18 – 34 (11 – 21)	560 – 1,060
	$D_3 \rightarrow D_2$ or $D_3 \rightarrow D_1$	11 – 28 (7 – 17)	350 – 850
	$D_2 \rightarrow D_1$	11 – 20 (7 – 12)	350 – 600
+46.7 (+350, +13.8)	$1_2 \rightarrow 1_1$	44 – 54 (27 – 34)	1,350 – 1,650
–60 (–450, –17.8)	$1_2 \rightarrow 1_1$	42 – 52 (26 – 32)	1,300 – 1,600

SHIFT SCHEDULE

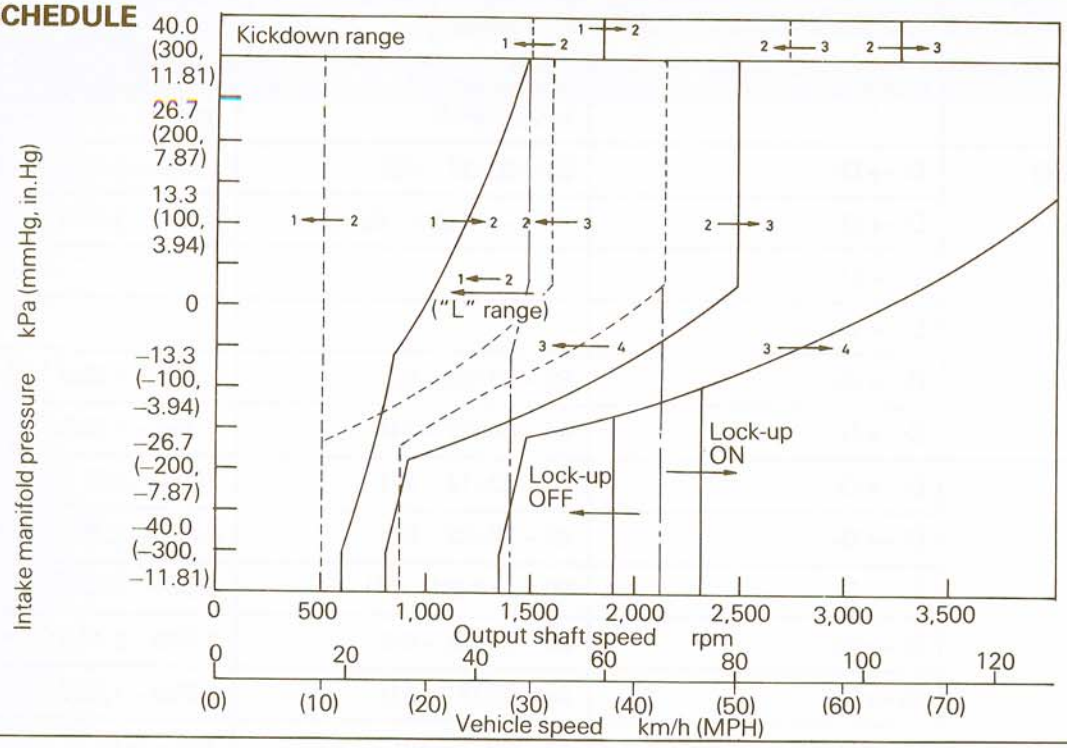

JAT190

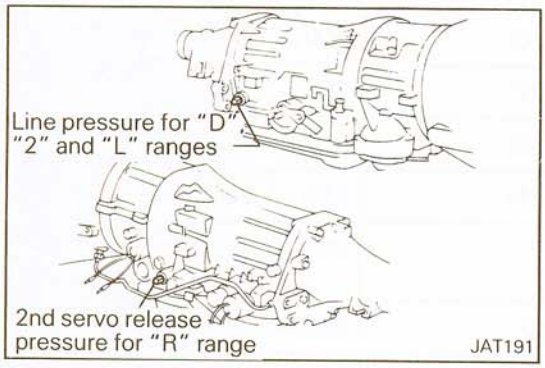

JAT191

PRESSURE TESTING

The transmission is provided with two pressure test ports.

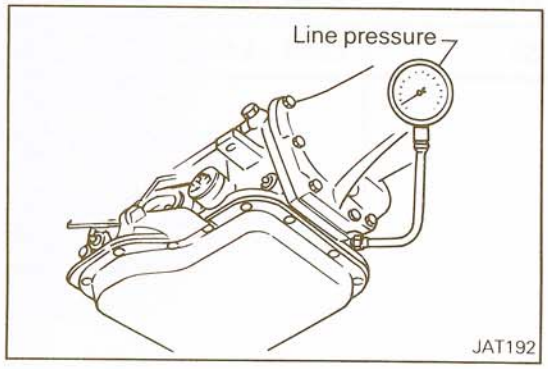

JAT192

LINE PRESSURE

1. Disconnect both line pressure and servo release pressure plugs and, in their places, attach pressure gauges.

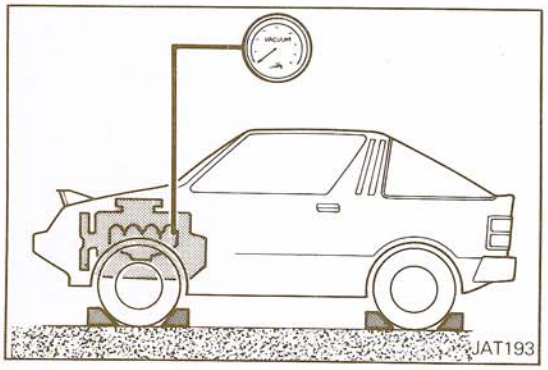

JAT193

2. Install vacuum gauge.
3. Check levels of engine cooling water, engine oil and automatic transmission fluid. Add as necessary, to reach the specified level.
4. Warm up engine until engine oil and automatic transmission fluid reach normal operating temperatures.
5. Place wheel chocks at all wheels, and firmly engage parking brake.
6. Measure line pressure at idle and at stall point while depressing brake pedal fully.

STB Revision

Line Pressure at Idle

Range	Line pressure kPa (psi)
R	304 – 441 (44 – 64)
D	275 – 373 (40 – 54)
2	785 – 1,128 (114 – 164)
1	275 – 373 (40 – 54)

Line Pressure at Stall Point

Range	Line pressure kPa (psi)
R	1,961 – 2,354 (284 – 341)
D	1,667 – 1,883 (242 – 273)
2	1,667 – 1,785 (242 – 259)
1	1,667 – 1,883 (249 – 273)

Key points of pressure testing are:
1. Pressure at idle: Lock for a steady rise in pressure as car speed increases under light load.
2. Pressure drop between shift points should not exceed 98 kPa (14 psi). Excessive pressure drop may indicate an internal leak at servo or clutch seal.

STALL TEST

The stall test is an effective method of testing clutch and band holding ability, torque converter one-way clutch operation, and engine performance. A stall test should only be performed as a last resort because of the high fluid temperature it generates and the excessive load it places on the engine and transmission.

Caution
1. **During test, never hold throttle wide-open for more than 5 seconds.**
2. **Do not test more than two gear ranges without driving car to cool off engine and transmission.**

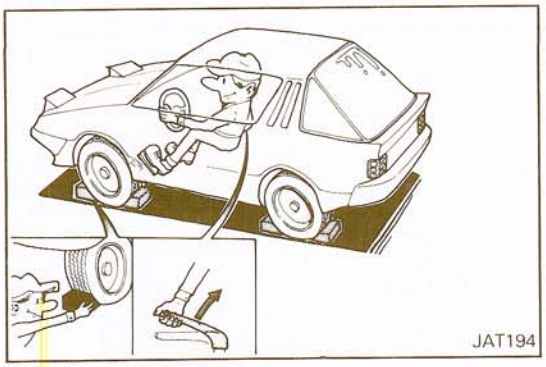
JAT194

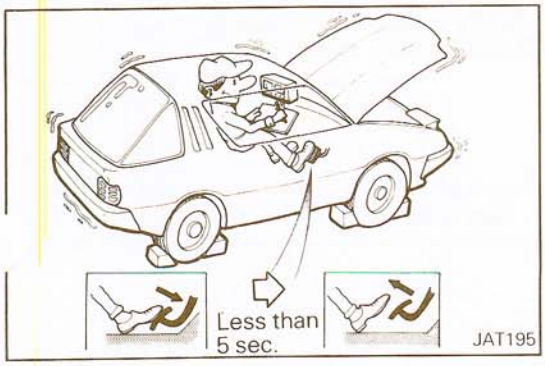

JAT195

STALL TEST PROCEDURE

1. Transmission and engine fluid levels should always be checked and fluid added as needed.
2. Run engine at 1,200 rpm to attain proper warm-up.
3. Set parking brake and block wheels.
4. Install a tachometer where it can be seen by driver during test.
5. Start engine and place selector lever in "D" range.
6. Apply foot brake and accelerate to wide-open throttle. Do not hold throttle open longer than five seconds.
7. Quickly note the engine stall speed and immediately release throttle.

   Standard value: 2,350 – 2,650 rpm
8. Shift selector lever to "N".
9. Run engine at 1,200 rpm for at least one minute, allowing it to cool off.
10. Perform stall tests in the same manner as in steps 5 through 9 with select lever in "2", "L" and "R", respectively.

STALL TEST ANALYSIS

1. Satisfactory results in "D" range indicates forward clutch (Rear), direct clutch, high-reverse clutch (Front), one-way clutch of transmission, and one-way clutch of torque converter, are functioning properly.
The analysis diagram is shown below.

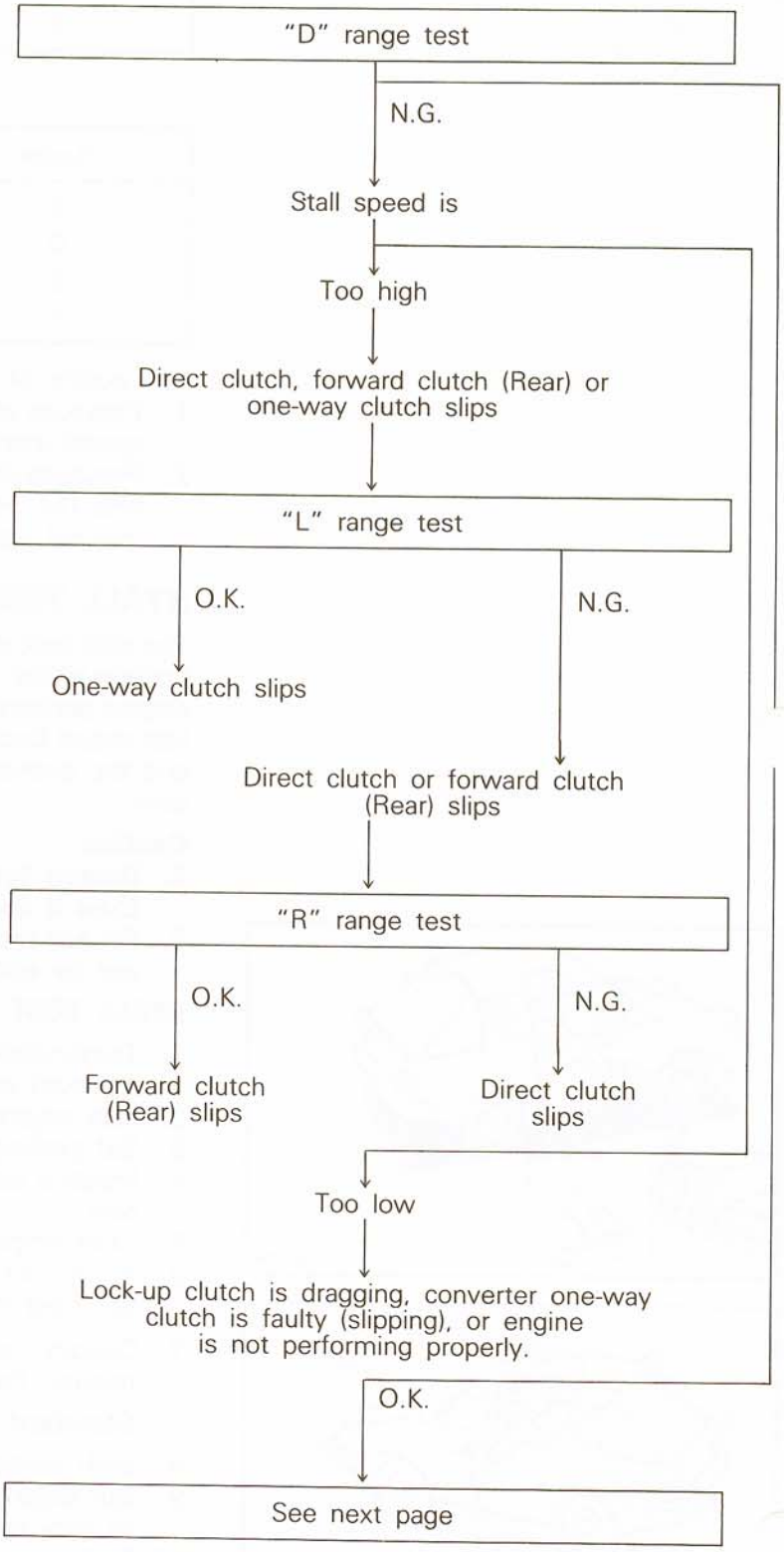

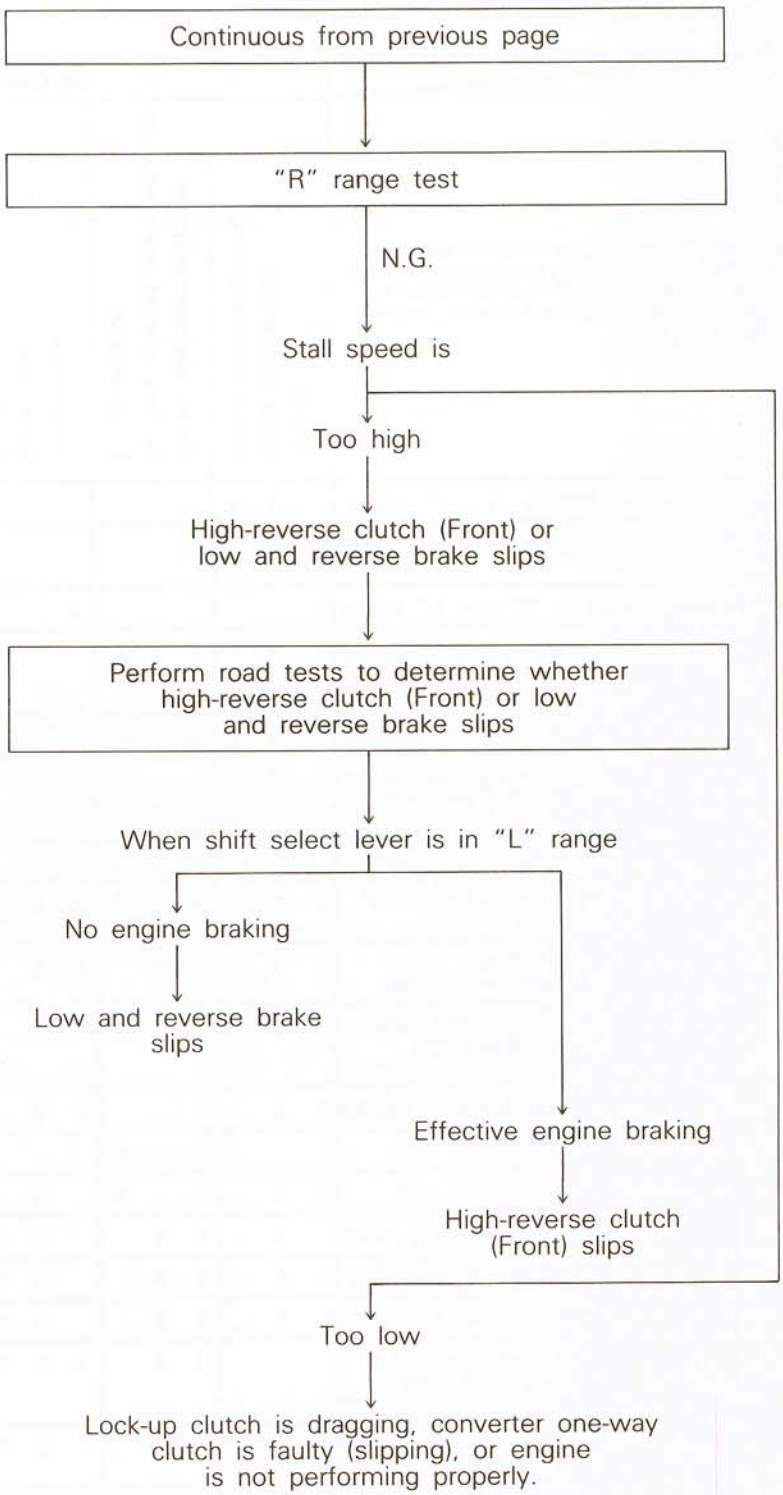

If converter one-way clutch is frozen, car will have poor high speed performance. If converter one-way clutch is slipping, car will be sluggish up to 50 or 60 km/h (30 or 40 MPH).

TROUBLESHOOTING CHART

| Numbers are arranged in order of probability. Perform inspections starting with number one and working up. Circled numbers indicate that the transmission must be removed from the car | ON CAR | | | | | | | | | OFF CAR | | | | | | | | |

Numbers are arranged in order of probability. Perform inspections starting with number one and working up. Circled numbers indicate that the transmission must be removed from the car	ON CAR												OFF CAR									
	Oil level	Range select linkage	Vacuum diaphragm and piping	Kickdown solenoid, switch and wiring	Line pressure	Engine stall rpm	Control valve	Governor	Band servo	Transmission air check	Oil quality	Engine adjustment, brake inspection	Direct clutch	Forward clutch (Rear)	High-reverse clutch (Front)	O.D. band brake	2nd band brake	Low and reverse brake	Oil pump	Oil passage leak	Transmission one-way clutch	High-reverse clutch (Front) check ball
Too sharp a shock in change from "1st" to "2nd"	.	.	1	.	.	2	4	.	5	.	3	.	.	.	.	.	⑥	.	.	.	.	.
Too sharp a shock in change from "2nd" to "3rd"	.	.	1	.	2	.	3	.	5	4	.	.	.	.	⑥	.	.	.	.	.	.	.
Too sharp a shock in change from "3rd" to "4th"	.	.	1	.	2	.	3	.	5	4	.	.	.	.	.	⑥	.	.	.	.	.	.
Almost no shock or clutches slipping in change from "1st" to "2nd"	1	2	3	.	4	.	6	.	8	7	5	.	.	.	.	.	⑨	.	.	⑩	.	.
Almost no shock or slipping in change from "2nd" to "3rd" Engine races extremely fast	1	2	3	.	4	.	6	.	8	7	5	.	.	.	⑨	.	.	.	.	⑩	.	⑪
Almost no shock or slipping in change from "3rd" to "4th"	1	2	3	.	4	.	6	.	8	7	5	.	.	.	.	⑨	.	.	.	⑩	.	.
Car braked by gear change from "1st" to "2nd"	.	.	.	.	.	.	2	.	.	.	1	.	.	.	④	.	.	③	.	.	⑤	.
Car braked by gear change from "2nd" to "3rd"	.	.	.	.	.	.	3	.	2	.	1	.	.	.	.	.	④	.	.	.	.	.
Car braked by gear change from "3rd" to "4th"	.	.	.	.	.	.	2	.	.	.	1	.	③	.	④	.	.	.	.	.	.	.
Maximum speed not attained. Acceleration poor	1	2	.	.	4	5	7	.	6	.	3	8	.	⑪	⑫	.	⑨	⑩	⑬	.	.	.
Failure to change gear from "4th" to "3rd"	.	.	1	.	.	.	3	4	.	5	2	.	⑥	.	⑦	⑧	.	.	.	⑨	.	.
Failure to change gear from "3rd" to "2nd" and from "4th" to "2nd"	.	.	1	.	.	.	3	4	6	5	2	.	.	.	⑦	⑩	⑧	.	.	⑨	.	.
Failure to change gear from "2nd" to "1st" or from "3rd" to "1st"	.	.	1	.	.	.	3	4	6	5	2	.	.	.	.	.	⑦	.	.	.	⑧	.
Gear change shock felt during deceleration by releasing accelerator pedal	.	1	2	3	4	.	5	6	.	.	.	.	.	.	.	.	.	.	.	⑦	.	.
Too high a change point from "4th" to "3rd", from "3rd" to "2nd", from "2nd" to "1st"	.	1	2	3	4	.	5	6	.	.	.	.	.	.	.	.	.	.	.	⑦	.	.
Kickdown does not operate when depressing pedal in "3rd" within kickdown car speed	.	.	2	1	.	.	4	5	.	.	3	.	.	.	.	.	⑥	.	.	⑦	.	.
Kickdown operates or engine overruns when depressing pedal in "3rd" beyond kickdown car speed limit	.	1	2	.	3	.	5	6	.	7	4	.	.	.	⑧	.	.	.	.	⑨	.	.
Races extremely fast or slips in changing from "4th" to "3rd" when depressing pedal	.	.	1	.	2	.	4	.	6	5	3	.	⑦	.	⑧	⑨	.	.	.	⑩	.	⑪
Races extremely fast or slips in changing from "3rd" to "2nd" when depressing pedal	.	.	1	.	2	.	4	.	6	5	3	.	.	.	⑦	.	⑧	.	.	⑨	.	⑩

| Numbers are arranged in order of probability. Perform inspections starting with number one and working up. Circled numbers indicate that the transmission must be removed from the car | ON CAR | | | | | | | | | | OFF CAR | | | | | | | | | |

Numbers are arranged in order of probability. Perform inspections starting with number one and working up. Circled numbers indicate that the transmission must be removed from the car.	ON CAR			OFF CAR				
	Governor tube	Governor	Line pressure	O-ring in input shaft	Torque converter	Lock-up control valve	Lock-up orifice in oil pump cover	Oil pump
Torque converter is not locked up	1	2	3	④	⑨	⑥	⑦	⑤
Lock-up piston slips			1	②	⑤		③	④
Lock-up point is extremely high or low	1	2				③		
Engine is stopped at "R", "D", "2" and "L" ranges					②	①		
Transmission overheats			1	②	⑤		③	④

ROAD TEST SYMPTOM CHART

		Shift quality									
		Rough	Shift timing [Mark km/h (MPH)]	No shift	Shift slippage	Car won't move	Cruise slippage	Poor power acceleration	Noisy	OK	Comments
PARK RANGE	ENG. START										
	HOLDING										
"R" RANGE	Man. shift P-R										
	REVERSE										
"N" RANGE	Man. shift R-N										
	ENG. START										
	N										
"D" RANGE	Man. shift N-D										
	1st										
	Auto shift 1-2										
	2nd										
	Auto shift 2-3										
	3rd										
	Auto shift 3-4										
	4th in Lock-up "OFF"										
	Auto shift Lock-up "OFF" (4) → Lock-up "ON" (4)										
	4th in Lock-up "ON"										
	Auto shift Lock-up "ON" (4) → Lock-up "OFF" (4)										
	Decel. 4-3										
	Kickdown 4-3										
	Decel. 3-2										
	Kickdown 3-2										
	Decel. 2-1										
	Kickdown 2-1										
"2" RANGE	Man. shift D-2										
	2nd										
"L" RANGE	Man. shift 2-L										
	Man. shift D-L										
	Acceleration										
	"L" Engine Braking										

STB Revision

TROUBLESHOOTING GUIDE

Order	Test item	Procedure
hecking	1. Oil level gauge	Check gauge for oil level and leakage before and after each test.
	2. Downshift solenoid	Check for sound of operating solenoid when depressing accelerator pedal fully with ignition key "ON".
	3. Manual linkage	Check by shifting into "P", "R", "N", "D", "2" and "L" ranges with selector lever.
	4. Inhibitor switch	Check whether starter operates in "N" and "P" ranges only and whether reverse light operates in "R" range only.
	5. Engine idling rpm	Check whether idle speed meets specifications.
	6. Vacuum pressure of vacuum pipe	Check whether vacuum pressure is more than 60.0 kPa (450 mmHg, 177.72 in.Hg) at idle and whether it decreases with increasing rpm.
	7. Operation in each range	Check whether transmission engages positively by shifting "N" → "D", "N" → "2", "N" → "L" and "N" → "R" range while idling with brake applied.
	8. Creep of car	Check whether there is any creep in "D", "2", "L" and "R" ranges.
Stall test	1. Oil pressure before testing	Measure line pressures in "D", "2", "L" and "R" range while idling.
	2. Stall test	Measure engine speed and line pressure in "D", "2", "L" and "R" ranges during full throttle operation. Temperature of torque converter oil used in test should be from 60 to 100°C (140 to 212°F) i.e., sufficiently warmed up but not overheated. **Caution** **To cool oil between each stall test for "D", "2", "L" and "R" ranges, idle engine, i.e., rpm at about 1,200 rpm for more than 1 minute in "P" range. Measurement time must not be more than 5 seconds.**
	3. Oil pressure after testing	Same as item 1.
Road test	1. Slow acceleration, 1st → 2nd 2nd → 3rd 3rd → 4th	Check car speeds and engine rpm in shifting up 1st → 2nd, 2nd → 3rd range and 3rd → 4th range and when torque converter is locked up while running with lever in "D" range and engine vacuum pressure of about 0 kPa (0 mmHg, 0 in.Hg).
	2. Quick acceleration, 1st → 2nd 2nd → 3rd	Same as item 1 above except with engine vacuum pressure of +46.66 kPa (+350 mmHg, +13.78 in.Hg) (i.e., in position just kickdown).
	3. Kickdown operation, 4th → 3rd, 3rd → 2nd or 2nd → 1st	Check whether the kickdown operates and measure the time delays while running at 30, 40, 50, 60, 70, 100 km/h (19, 25, 31, 37, 43, 62 MPH) in "D_3" or "D_4" range.
	4. Shift down, $D_4 \rightarrow D_3 \rightarrow D_2 \rightarrow D_1$	Check car speeds and engine rpm in shifting down from 4th → 3rd → 2nd → 1st (sequentially) while coasting with accelerator pedal released in "D_4" range and engine vacuum pressure of about –60.0 kPa (–450 mmHg, –17.72 in.Hg).
	5. Shift down, $D_3 \rightarrow 1_2 \rightarrow 1_1$	Check for shifting down $D_3 \rightarrow 1_2$ and engine braking, and further for shifting down $1_2 \rightarrow 1_1$ and engine braking after shifting the lever into "L" range with the accelerator pedal released and the engine vacuum pressure of about 60 kPa (450 mmHg, 17.72 in.Hg) while driving at about 50 km/h (30 MPH) in "D_3" range.
	6. Shift down, $D_3 \rightarrow 2$	Check for quick shifting down $D_3 \rightarrow 2$ and engine braking, after shifting the lever into "2" range while driving at about 50 km/h (30 MPH) in "D_3" range. Also, check for locking of the transmission in 2nd gear ratio regardless of car speed.

Order	Test item	Procedure
Road test	7. Shift up, $1_1 \rightarrow 1_2$	Check for failure of the transmission to shift up during acceleration, when starting in "L" range.
	8. Shift up or down when starting in "2" range	Check the transmission for not shifting up or down during acceleration or deceleration, when starting in "2" range.
	9. Parking	Confirm that car will not move on grade when shifting to "P" range.
	10. O.D. cancel switch operation	Confirm that transmission will not shift to overdrive while running with O.D. cancel switch ON.
	11. O.D. indicator light	Confirm that O.D. indicator light glows when ignition switch is ON (engine not started), and that it goes off as soon as engine is started. Confirm that light glows when transmission is shifted to O.D. and driven in "D" range with O.D. cancel switch OFF.
Others	Abnormal shock, oil leakage	Enter into record conditions observed during these tests such as gear noise, abnormal clutch noise and acceleration performance.

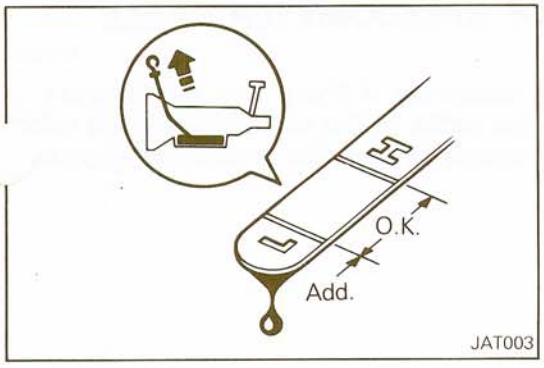

SERVICE ADJUSTMENT PROCEDURES

N21FBBB

INSPECTION OF TRANSMISSION FLUID

(1) Place vehicle on level floor.
(2) Before removing dipstick, wipe all dirt from area around dipstick.
(3) With selector lever in "P" (Park) and parking brake applied, start engine.
(4) Engine should be running at idle speed. Transmission should be warmed-up sufficiently [fluid temperature 50 to 80°C (120 to 180°F)].
(5) Move selector lever sequentially to every position to fill torque converter and hydraulic circuit with fluid, then place lever in "N" (Neutral) position.
(6) Check to see if fluid level is in the range indicated on dipstick.
If it is low, add ATF until level reaches that range.

Transmission fluid: DEXRON II type

Low fluid level can cause a variety of troubles because it allows pump to take in air along with fluid. Air trapped in hydraulic circuit forms bubbles which make fluid spongy. Therefore, pressures will be erratic, and causes delay of shifting, and slippage of clutch and brake.
Improper filling can raise fluid level too high. When transmission has too much fluid, gears churn up foam and cause same conditions which occur with low fluid level, resulting in accelerated deterioration of ATF.
In either case, air bubbles can cause overheating, fluid oxidation, and varnishing, which can interfere with normal valve, clutch, and servo operation.
Foaming can also result in fluid escaping from transmission vent where it may be mistaken for a leak. Along with fluid level, it is important to check the condition of the fluid. When fluid smells burned, it is contaminated with metal bushing or friction material particles, and a complete transmission overhaul is needed. Be sure to examine fluid on dipstick closely. If there is any doubt about its condition, drain out sample for double check. After fluid has been checked, seat dipstick fully to seal out water and dirt.

REPLACEMENT OF TRANSMISSION FLUID N21FCBA

Refer to GROUP 0 LUBRICATION AND MAINTENANCE – Engine Adjustment.

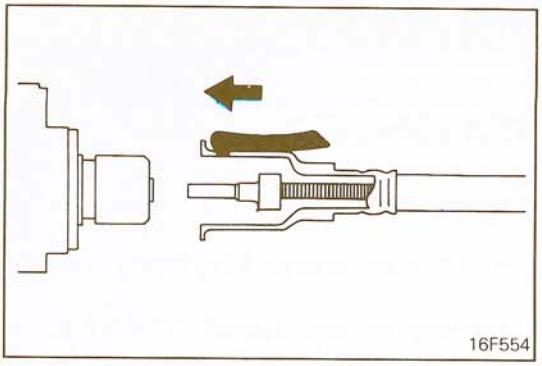

REPLACEMENT OF SPEEDOMETER CABLE

N21FEAA

(1) Replace the cable assembly if there is a malfunction.
(2) When connecting the cable to the meter, insert the cable until its stopper properly fits to the meterside groove

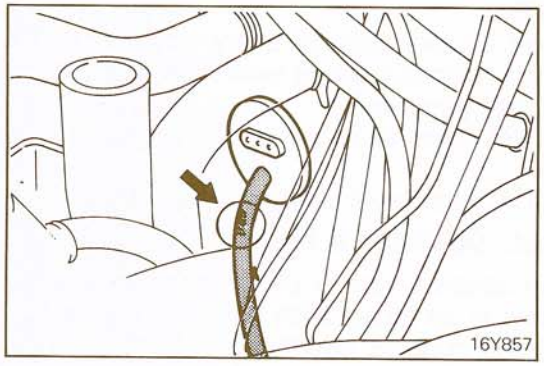

(3) After installing the speedometer, pull the speedometer cable through the grommet in the toeboard until the cable marking is visible from the engine compartment side.

Caution
Poor installation of the cable may cause a fluctuating meter pointer, or noise and a damaged harness inside the instrument panel.

ON-VEHICLE SERVICE

N21FA- -

The following parts can be serviced with the transmission on the vehicle.

1. Control valve body assembly
2. Extension oil seal
3. Parking components
4. Governor valve assembly
5. Inhibitor switch
6. Vacuum diaphragm and downshift solenoid

Check and/or replace faulty parts as follows:

CONTROL VALVE BODY ASSEMBLY

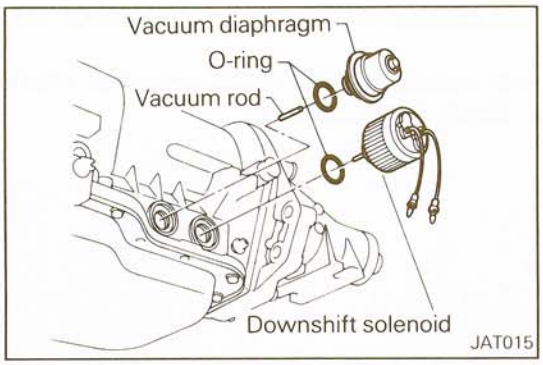

1. Drain fluid by removing oil pan.
2. Remove downshift solenoid and vacuum diaphragm and rod. Be careful not to lose vacuum rod.

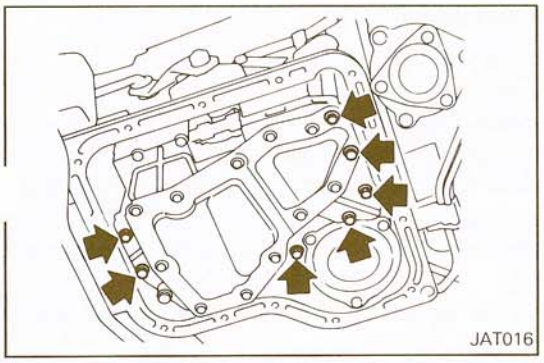

3. Remove seven bolts and remove control valve body assembly.
4. Disassemble, inspect and reassemble control valve body assembly. Refer to page 21-120 for Control Valve Body.

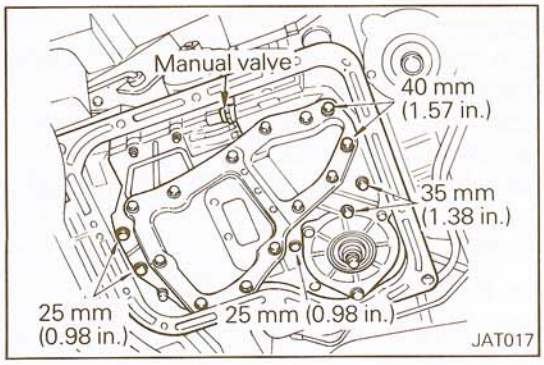

5. Set manual shaft in Neutral, then align manual plate with groove in manual valve.
6. Install control valve body assembly and tighten seven bolts to the specified torque.

   Control valve body mounting bolts:
   5.4 – 7.4 Nm (4.0 – 5.4 ft.lbs.)

7. After installing control valve body to transmission case, make sure that control lever can be moved to all position.
8. Install downshift solenoid and vacuum diaphragm and rod. Make sure that vacuum diaphragm rod does not interfere with side plate of control valve.
9. Install new gasket and oil pan.

   Oil pan bolts: 6 – 8 Nm (4.4 – 5.7 ft.lbs.)

10. Secure clamps of governor tube and oil cooler tubes.
11. Refill with automatic transmission fluid.

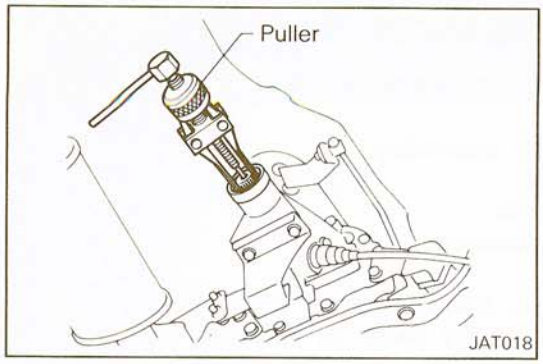

REPLACEMENT OF EXTENSION OIL SEAL

1. Remove propeller shaft.
2. Remove extension oil seal use with suitable puller.

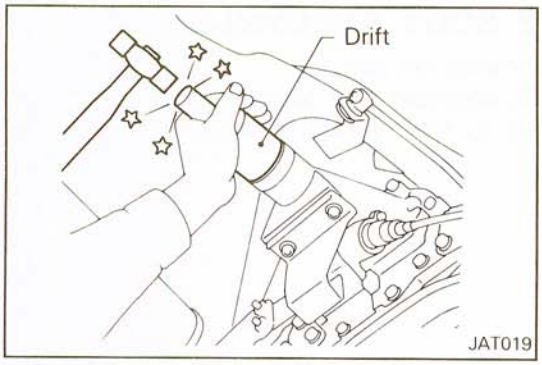

3. Apply coat of ATF to oil seal surface, then drive new seal into place.
4. Coat sealing lips with vaseline, then install propeller shaft. Refer to Propeller Shaft for installation.

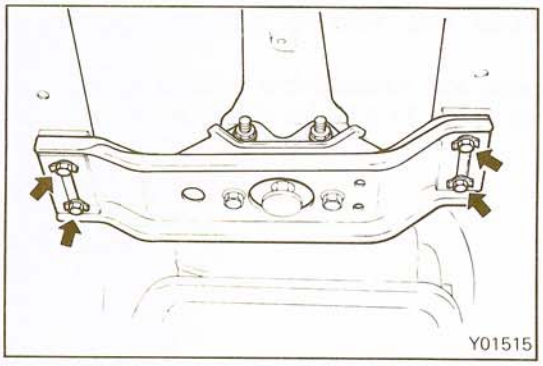

PARKING COMPONENTS

1. Drain oil by removing oil pan.
2. Remove propeller shaft.
3. Remove speedometer cable from transmission, then remove speedometer sleeve assembly.
4. Support transmission with a jack and wooden block, the remove rear mounting bolts.
5. Remove rear extension bolts, then remove rear extension with rear mounting.
6. Remove control valve assembly. Refer to Control Valve Assembly.
7. Inspect and repair parking components. Refer to Parking Mechanism for inspection.
8. Install control valve assembly. Refer to Control Valve Assembly for on-vehicle service.
9. Install rear extension, then install rear mounting parts.
10. Install speedometer sleeve assembly and cable.
11. Install propeller shaft. Refer to Propeller Shaft for installation.
12. Install oil pan with new gasket.

    Oil pan bolts: 6 – 8 Nm (4.4 – 5.7 ft.lbs.)

13. Refill with automatic transmission fluid.

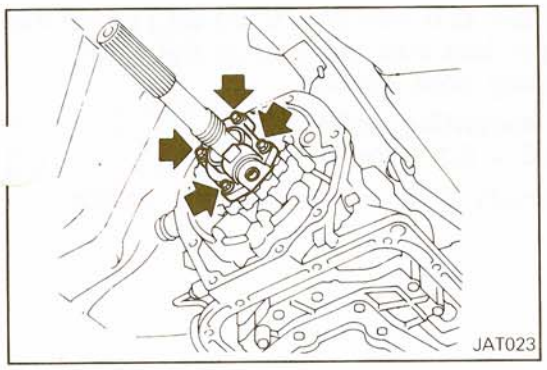

GOVERNOR VALVE ASSEMBLY

1. Drain oil by removing oil pan.
2. Remove rear mounting parts, then remove rear extension. Refer to Parking Components.
3. Remove governor valve assembly.
4. Inspect and repair governor valve assembly. Refer to Governor for inspection.
5. Install governor valve assembly.

   Governor valve mounting bolts: 5 – 7 Nm (3.6 – 5.1 ft.lbs.)
6. Install extension, then install rear mounting parts. Refer to Parking Components.
7. Install oil pan with new gasket.

   Oil pan bolts: 6 – 8 Nm (4.4 – 5.7 ft.lbs.)

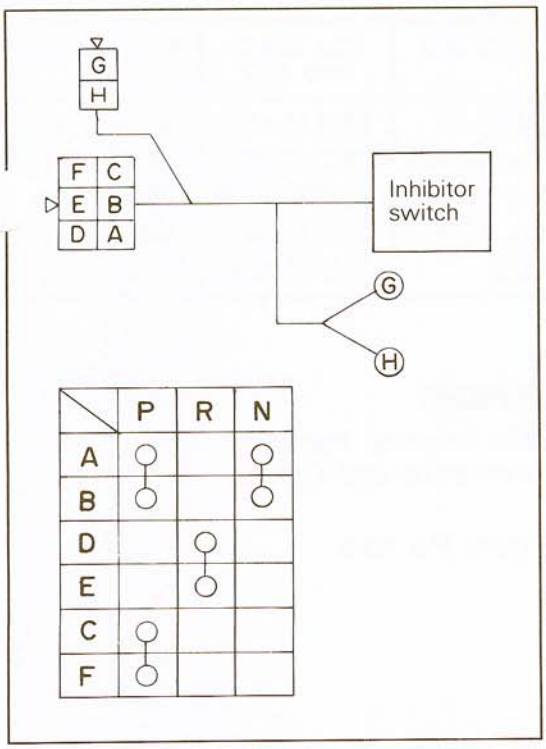

INHIBITOR SWITCH ADJUSTMENT

The inhibitor switch has two major functions. It causes the back-up lights to illuminate when the shift lever is placed in the reverse range. It also acts as a neutral safety switch allowing current to pass from the starter only when the lever is placed in the "P" or "N" range.

INSPECTION

A continuity tester may be used to check the inhibitor switch for proper operation.

1. Check continuity at "N", "P" and "R" ranges.
2. With control lever held in Neutral, turn manual lever an equal amount in both directions to see if current flow ranges are nearly the same. (Current normally begins to flow before manual lever reaches an angle of 1.5° in either direction.)
   If current flows outside normal range, or if normal flow range is out of specifications, properly adjust inhibitor switch.

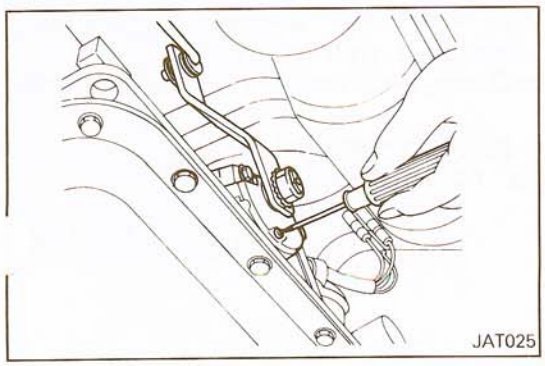

ADJUSTMENT

1. Place the manual valve in Neutral (vertical position).
2. Remove the screw as illustrated.
3. Loosen the attaching bolts.

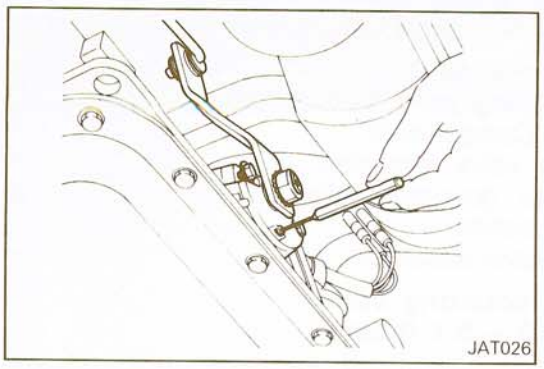
JAT026

4. Using an aligning pin, [2.0 mm (0.079 in.) dia.] move the switch until the pin falls into the hole in the rotor.
5. Tighten the attaching bolts equally.

Inhibitor switch mounting bolts:
5 – 7 Nm (3.6 – 5.1 ft.lbs.)

6. Recheck for continuity. If faulty, replace the switch.

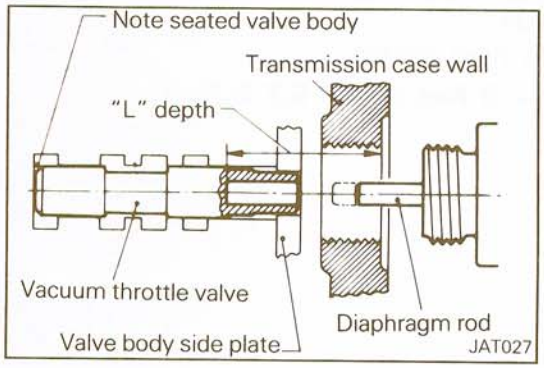

VACUUM DIAPHRAGM ROD ADJUSTMENT

The vacuum diaphragm and the length of its diaphragm rod help determine the shift patterns of the transmission. It is essential that the correct length rod be installed.

1. Disconnect vacuum hose at vacuum diaphragm and remove diaphragm from transmission case.
2. Using a depth gauge, measure depth "L". Be sure vacuum throttle valve is pushed into valve body as far as possible.
3. Check "L" depth with chart below and select proper length rod.

Vacuum Diaphragm Rod Selection

Measured depth "L" mm (in.)	Rod length mm (in.)	Part number
Under 25.55 (1.0059)	29.0 (1.142)	MD610614
25.65 – 26.05 (1.0098 – 1.0256)	29.5 (1.161)	MD610615
26.15 – 26.55 (1.0295 – 1.0453)	30.0 (1.181)	MD610616
26.65 – 27.05 (1.0492 – 1.0650)	30.5 (1.201)	MD610617
Over 27.15 (1.0689)	31.0 (1.220)	MD610618

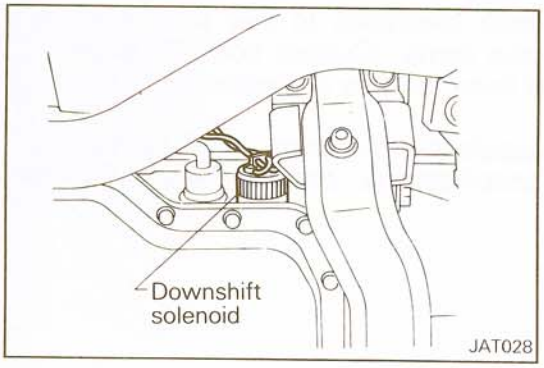

DOWNSHIFT SOLENOID

1. Disconnect downshift solenoid harness.
2. Remove downshift solenoid and O-ring.

NOTE
Catch oil draining from the hole.

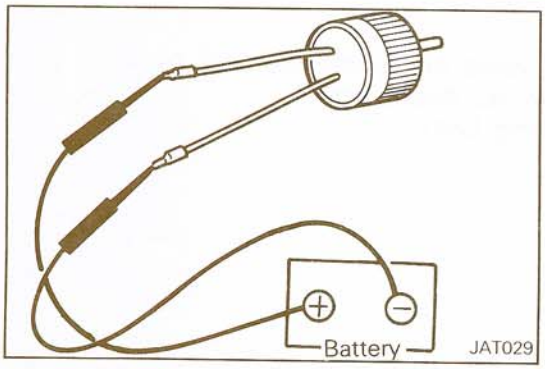

3. Check to verify that downshift solenoid is operating properly. If faulty, replace it with a new one.
4. Apply coat of ATF to O-ring, and install O-ring and downshift solenoid.
5. Connect downshift solenoid harness.
6. Refill with automatic transmission fluid.

STB Revision

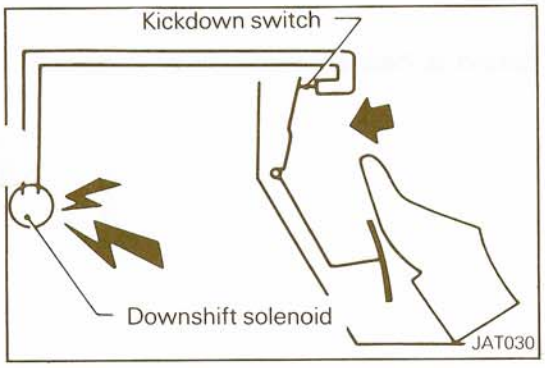

KICKDOWN SWITCH ADJUSTMENT

The kickdown switch is located at the upper post of the accelerator pedal, inside the car.
When the pedal is fully depressed, a click can be heard just before the pedal bottoms out. If the click is not heard, loosen the lock nut and extend the switch until the pedal lever makes contact with the switch and the switch clicks.
Do not allow the switch to make contact too soon. This would cause the transmission to downshift on part throttle.

DIAGNOSIS

Switch can be heard clicking, and the transmission still does not kickdown:
Check the continuity of the switch using a continuity tester. Also check for available current.

The car upshifts at approximately 60 and 100 km/h (36 and 60 MPH) only:
The kickdown switch may be internally shorted. (When the switch is shorted, there is continuity through the switch in any position).

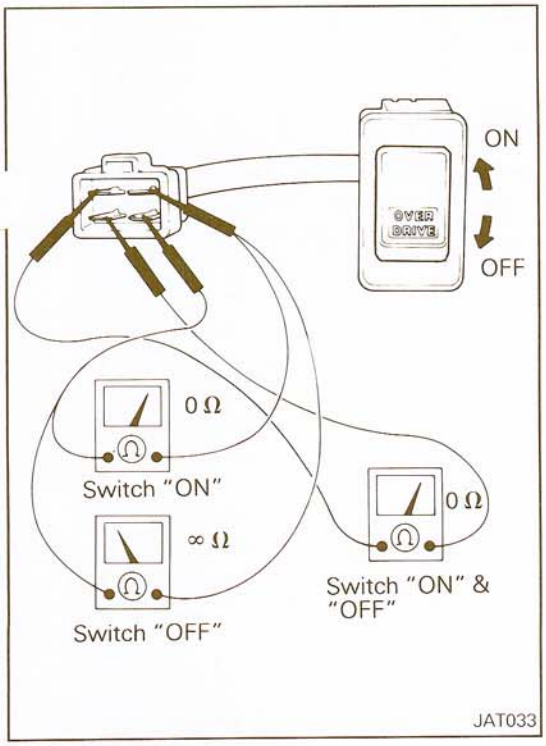

O.D. CANCEL SWITCH & O.D. INDICATOR LIGHT

LOCATION

The O.D. cancel switch is located in center console box.

INSPECTION

(1) Disconnect O.D. cancel switch connector.
(2) Connect an ohmmeter as illustrated and check continuity between terminals. Replace the switch with new one if the measurements are not as shown in the illustration.
(3) Reconnect the connector.

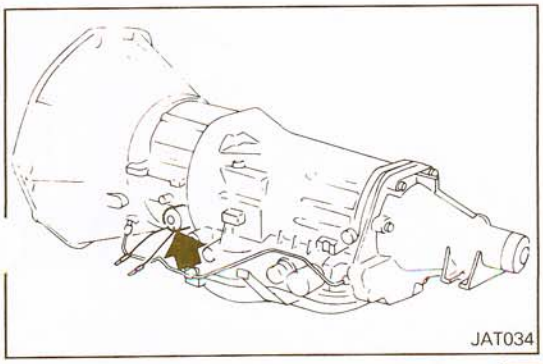

O.D. CANCEL SOLENOID

LOCATION

The O.D. cancel solenoid is located on left side of transmission.

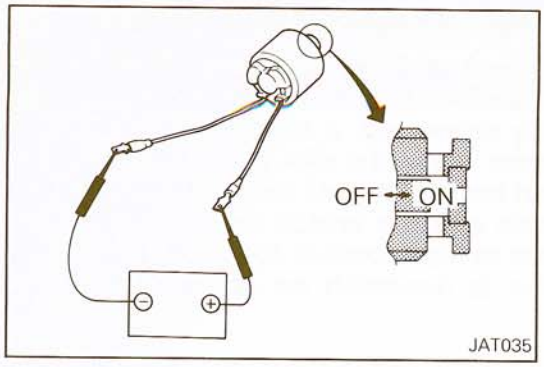

INSPECTION

Confirm that clicking sound is heard when power is applied.

TRANSMISSION OIL COOLER

N21SA--

REMOVAL AND INSTALLATION

Pre-removal Operation
- Removal of Aero Guard Panel and Air Guide Panel
- Draining Automatic Transmission Fluid
  (Refer to GROUP 0 LUBRICATION AND MAINTENANCE – Maintenance Service.)

Post-installation Operation
- Installation of Aero Guard Panel and Air Guide Panel
- Refilling with Automatic Transmission Fluid
  (Refer to GROUP 0 LUBRICATION AND MAINTENANCE – Maintenance Service.)

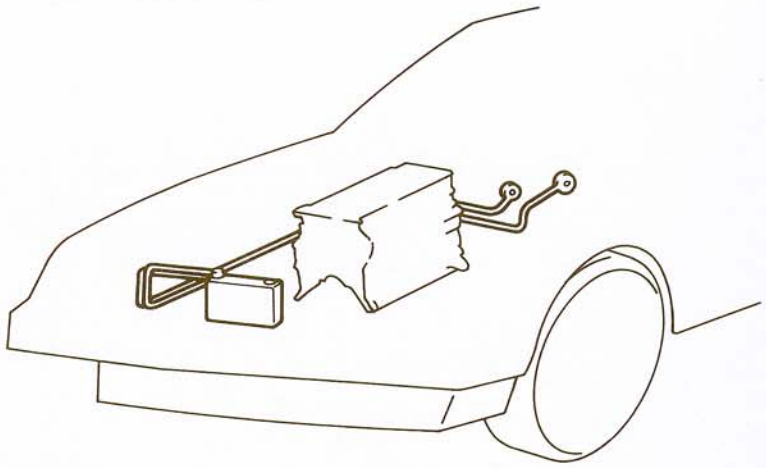

20Y1639

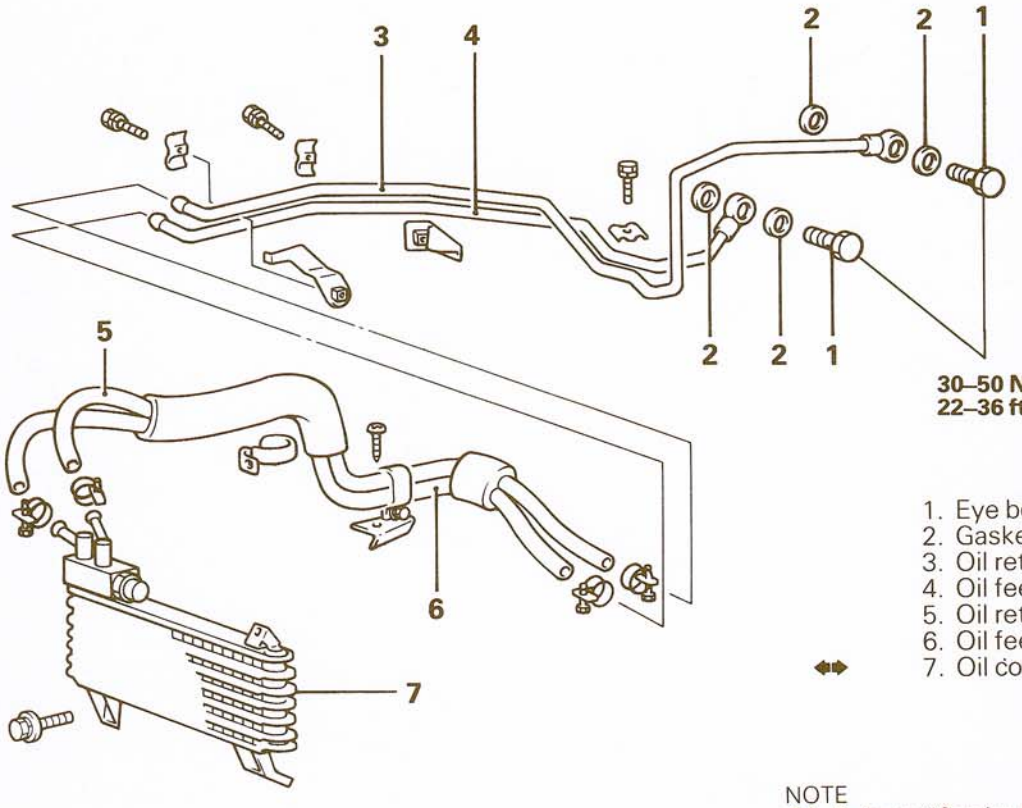

30–50 Nm
22–36 ft.lbs.

1. Eye bolts
2. Gasket
3. Oil return tube
4. Oil feed tube
5. Oil return hose
6. Oil feed hose
7. Oil cooler assembly

NOTE
◆◆: Refer to "Service Points of Removal".

STB Revision

SERVICE POINT OF REMOVAL

N21SBAA

7. REMOVAL OF OIL COOLER ASSEMBLY

Caution
Plug the ends of the oil cooler hoses and the oil coo' and transmission ports to prevent the transmissi. fluid from spilling out and foreign material from getting in.

INSPECTION

N21SCAC

- Check the oil cooler hoses for cracks, damage and deterioration.
- Check the pad for damage and deterioration.
- Check the oil cooler for foreign material.

TRANSMISSION CONTROL

N21IA--

REMOVAL AND INSTALLATION

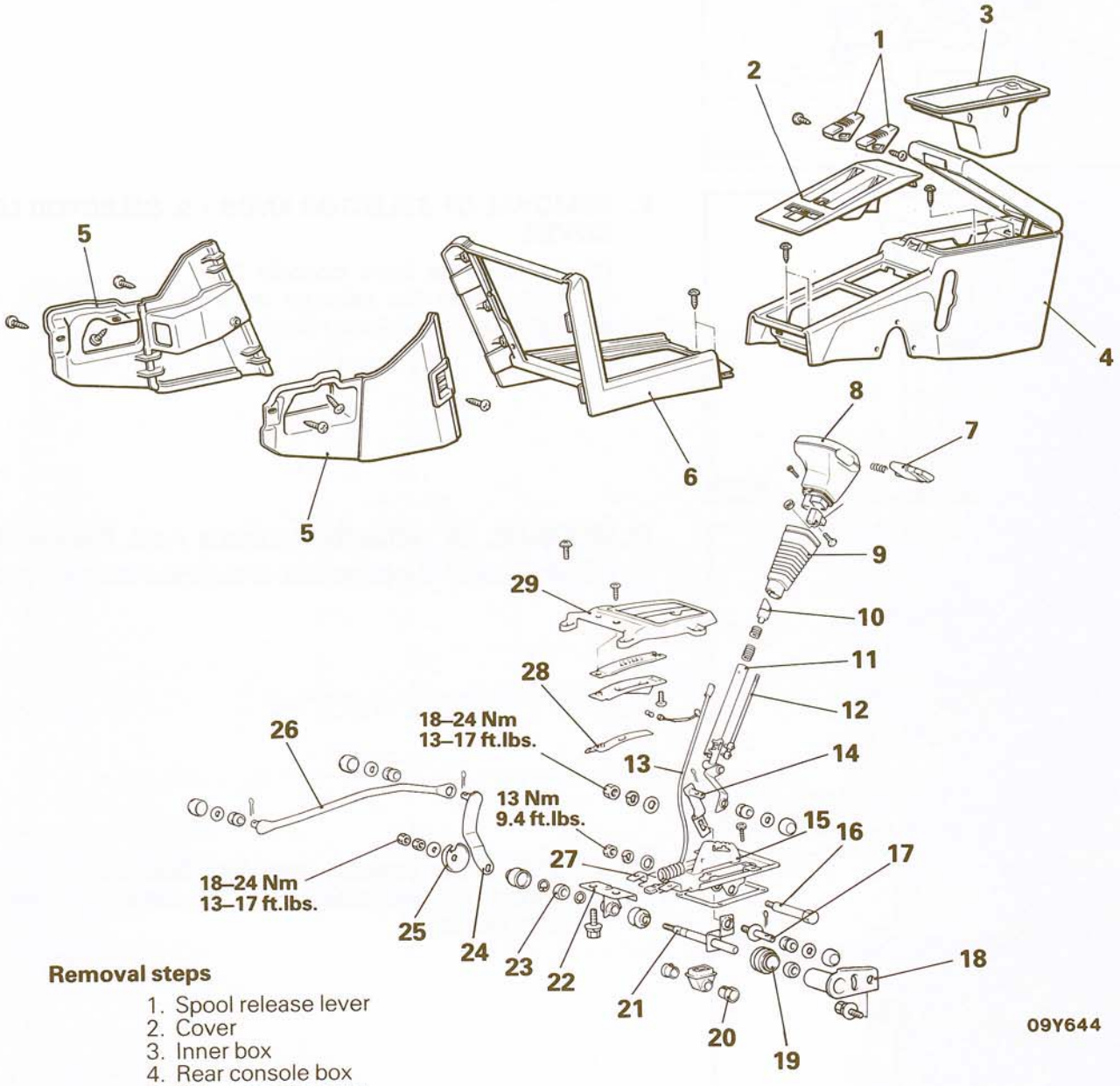

Removal steps

1. Spool release lever
2. Cover
3. Inner box
4. Rear console box
5. Side console cover
6. Front console box
7. Push button
8. ◆◆ Selector knob
9. ◆◆ Selector lever cover
10. Adjusting cam
11. ◆◆ ◆◆ Selector lever
12. Selector lever rod
13. O.D. (overdrive) switch harness
14. Lever
15. Detent plate
16. Shaft
17. Pin
18. Support
19. Boot
20. Dust boot
21. Cross-shaft
22. Support
23. Cross-shaft bushing
24. Lever
25. Protector
26. Rod
27. ◆◆ Bracket
28. Slider
29. Indicator panel

NOTE
(1) Reverse the removal procedures to reinstall.
(2) ◆◆: Refer to "Service Points of Removal".
(3) ◆◆: Refer to "Service Points of Installation".

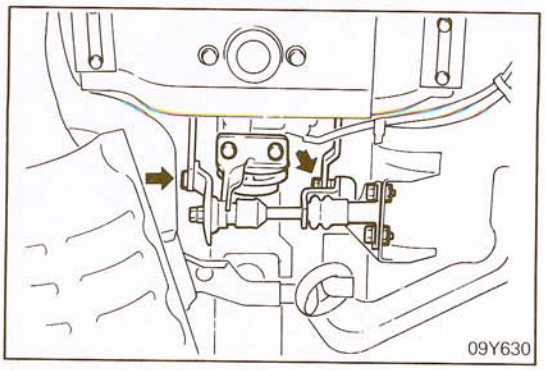

SERVICE POINTS OF REMOVAL

N21IBAD

NOTE
Before servicing be sure to set the selector lever to "N" position, and then disconnect the lever and rod from the cross-shaft.

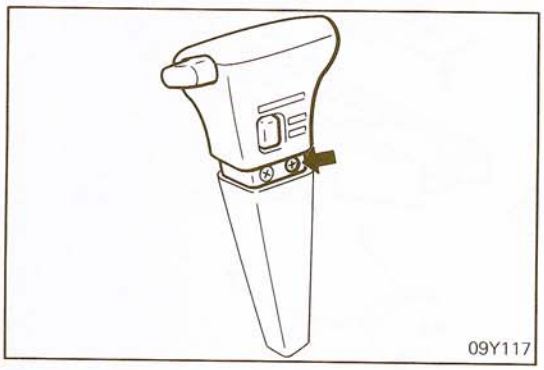

8. REMOVAL OF SELECTOR KNOB / 9. SELECTOR LEVER COVER

(1) Remove the front console box.
(2) Push down the selector lever cover.
(3) Remove the selector knob from the selector lever.

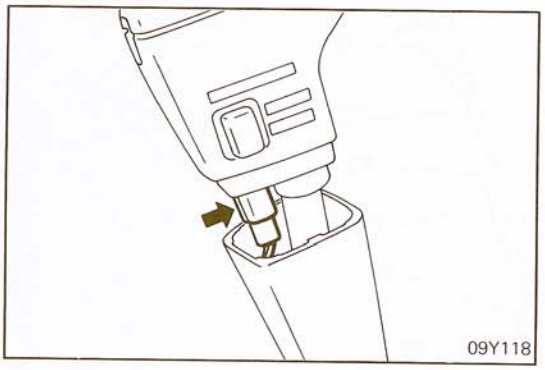

11. REMOVAL OF SELECTOR LEVER / 27. BRACKET

(1) Disconnect the connector of indicator illumination light.

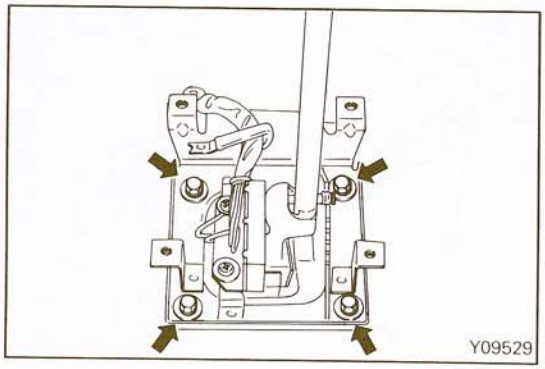

(2) Remove the selector lever and bracket.
(3) Remove the split pins in order to disconnect the lever from bracket.

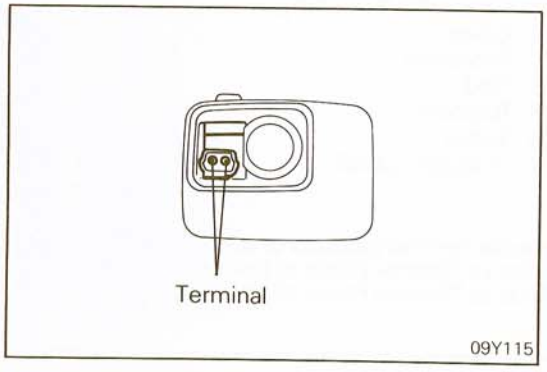

INSPECTION

N21ICAD

- Check the detent plate for wear.
- Check the pin at the end of selector lever for wear.
- Check the contact surfaces of push button and adjusting cam for wear.
- With the O.D. switch turned on, check for continuity across the terminals.
- Check the O.D. switch harness for continuity.

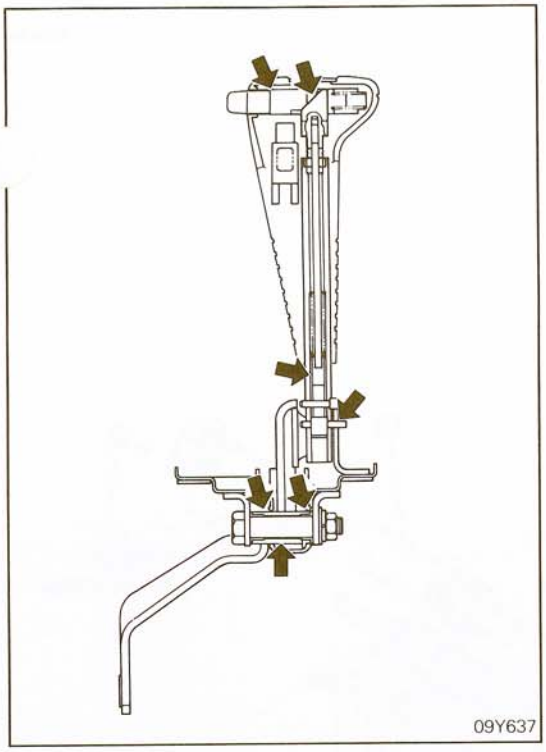

SERVICE POINT OF INSTALLATION N21IDAD

11. INSTALLATION OF SELECTOR LEVER

(1) Apply a thin coat of specified multipurpose grease to the sliding parts.

Specified grease: Multipurpose grease SAE J310, NLGI No. 2

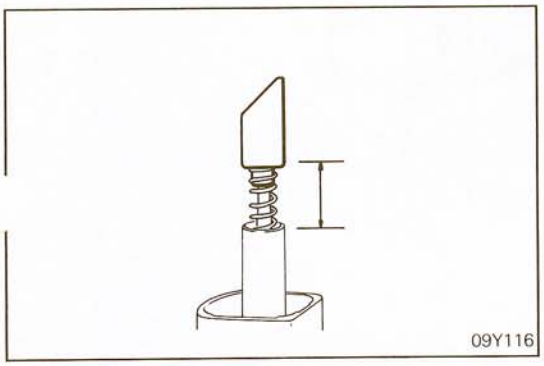

(2) Set the selector lever to "N" position, and adjust the adjusting cam until the dimension shown in the illustration reaches the standard value.

Standard value: 15 – 15.7 mm (0.59 – 0.62 in.)

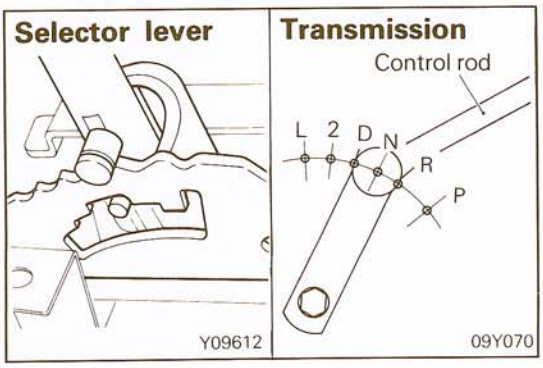

(3) Connect the control rod to the transmission side lever and the cross-shaft assembly lever. With the selector lever set to "N" position and the transmission side lever to its neutral position, connect and lock the lever to cross-shaft.

TRANSMISSION

N21LA- -

REMOVAL AND INSTALLATION

Pre-removal Operation
- Removal of Under Cover
- Draining Transmission Fluid
  (Refer to GROUP 0 LUBRICATION AND MAINTENANCE – Maintenance Service.)

Post-installation Operation
- Refilling with Transmission Fluid
  (Refer to GROUP 0 LUBRICATION AND MAINTENANCE – Maintenance Service.)
- Installation of Under Cover

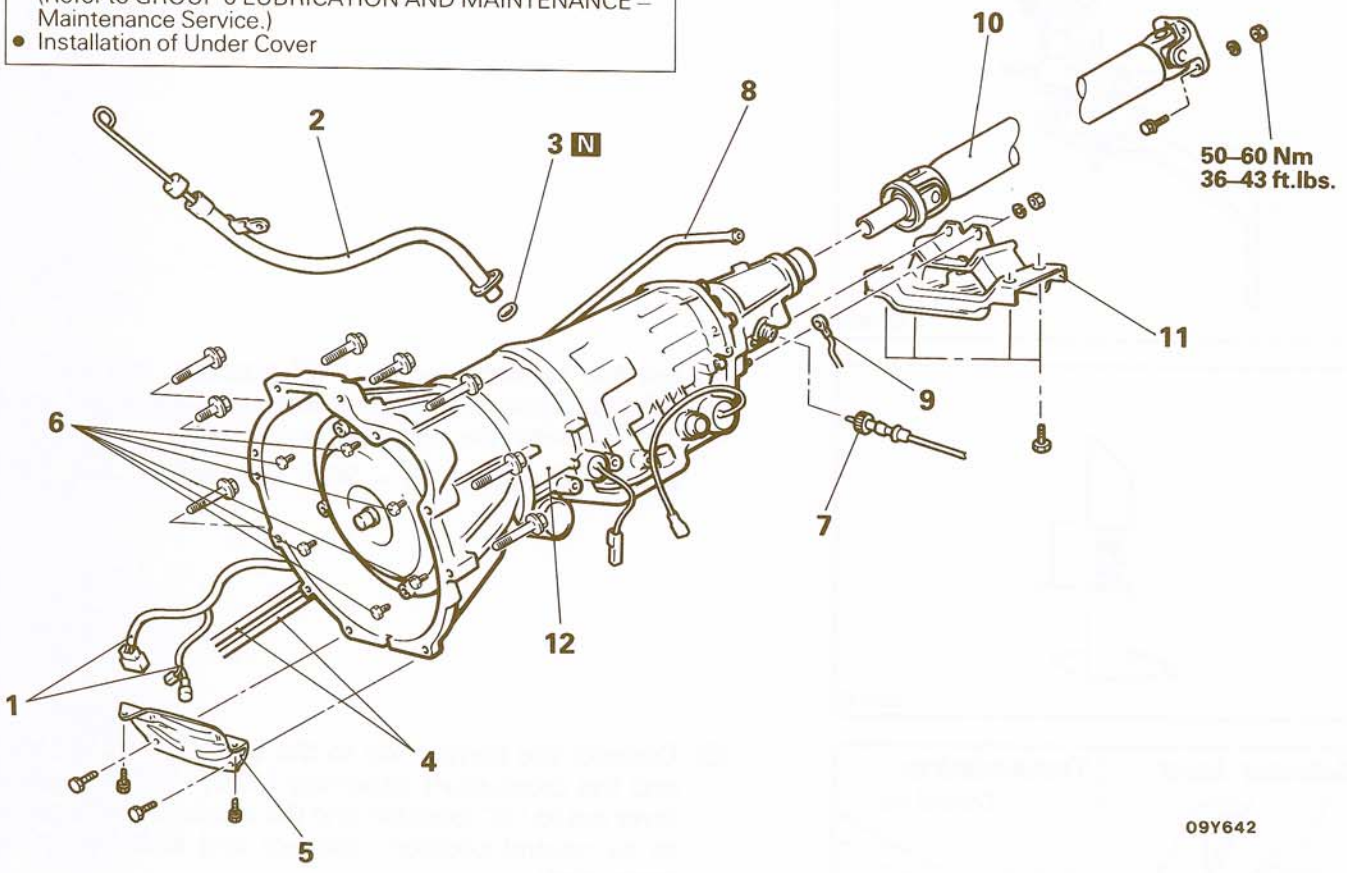

Removal steps

1. Transmission control harness
2. Filler tube
3. O-ring
4. Oil feed tube and oil return tube connection
5. Bell housing cover
◀▶ 6. Special bolts
7. Speedometer cable
8. Transmission control rod
9. Ground cable
◀▶ 10. Propeller shaft
◀▶ 11. Engine support rear bracket
◀▶ ▶◀ 12. Transmission assembly

NOTE
(1) Reverse the removal procedures to reinstall.
(2) ◀▶: Refer to "Service Points of Removal".
(3) ▶◀: Refer to "Service Points of Installation".
(4) N: Non-reusable parts

	Nm	ft.lbs.	O.D. x Length mm (in.)	Bolt identification
A	43 – 55	31 – 40	⑦ 10 x 40 (1.6)	⑦ A x B
B	43 – 55	31 – 40	⑦ 10 x 65 (2.6)	
C	22 – 32	16 – 23	⑦ 10 x 60 (2.4)	
D	20 – 27	14 – 20	⑦ 8 x 55 (2.2)	

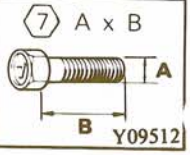

STB Revision

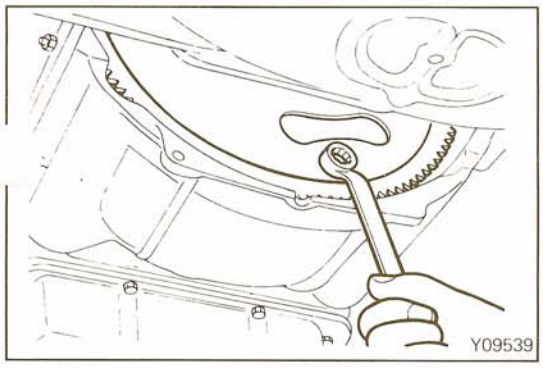

SERVICE POINTS OF REMOVAL N21LBAD

6. REMOVAL OF SPECIAL BOLTS

Remove six special bolts connecting the torque converter and drive plate.

10. REMOVAL OF PROPELLER SHAFT

Refer to GROUP 16 PROPELLER SHAFT AND UNIVERSAL JOINT – Propeller Shaft.

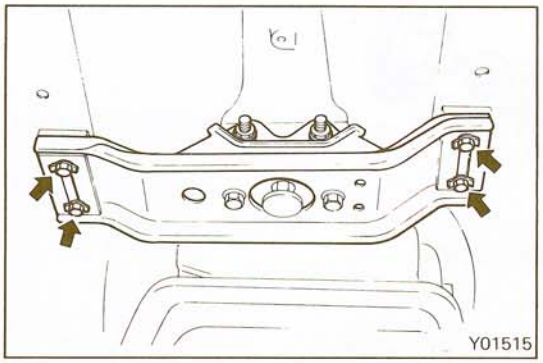

11. REMOVAL OF ENGINE SUPPORT REAR BRACKET

Support the rear of the engine with jack or similar device. With the transmission assembly supported by using transmission jack, remove the engine support rear bracket.

Caution
When the transmission assembly is supported on a service jack, the supporting area should be as wide as possible.

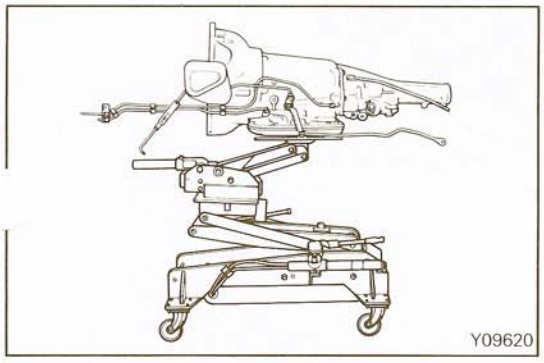

12. REMOVAL OF TRANSMISSION ASSEMBLY

Move the transmission rearward to separate it from engine.

Caution
The torque converter should not remain on engine when separated.

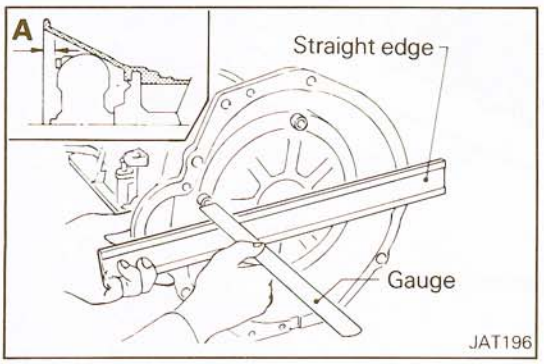

SERVICE POINT OF INSTALLATION N21LDAD

12. INSTALLATION OF TRANSMISSION ASSEMBLY

Install automatic transmission reversing the removal procedure and noting the following exception.
Before installing automatic transmission to vehicle, measure distance "A" to be certain that they are correctly assembled.

Distance "A": More than 35 mm (1.38 in.)

Refill automatic transmission with fluid and check fluid level.
Check inhibitor switch for operation. Starter motor should be brought into operation only when selector lever is in "P" and "N" positions (it should not be started when selector lever is in "D", "2", "L" and "R" positions). Back-up light should also light when selector. lever is placed in "R" position.

AUTOMATIC TRANSMISSION ASSEMBLY

N21LE- -

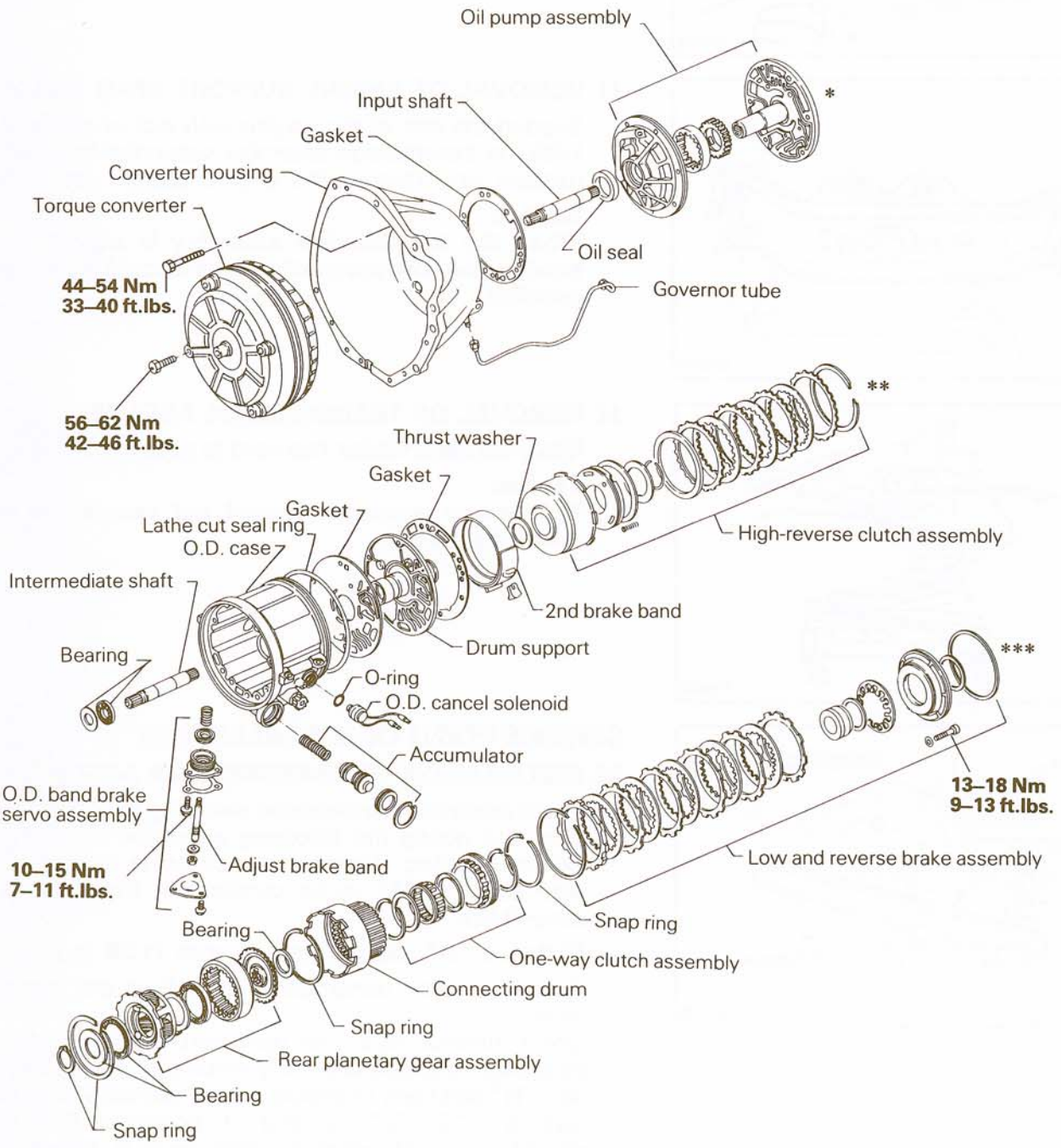

JAT036

STB Revision

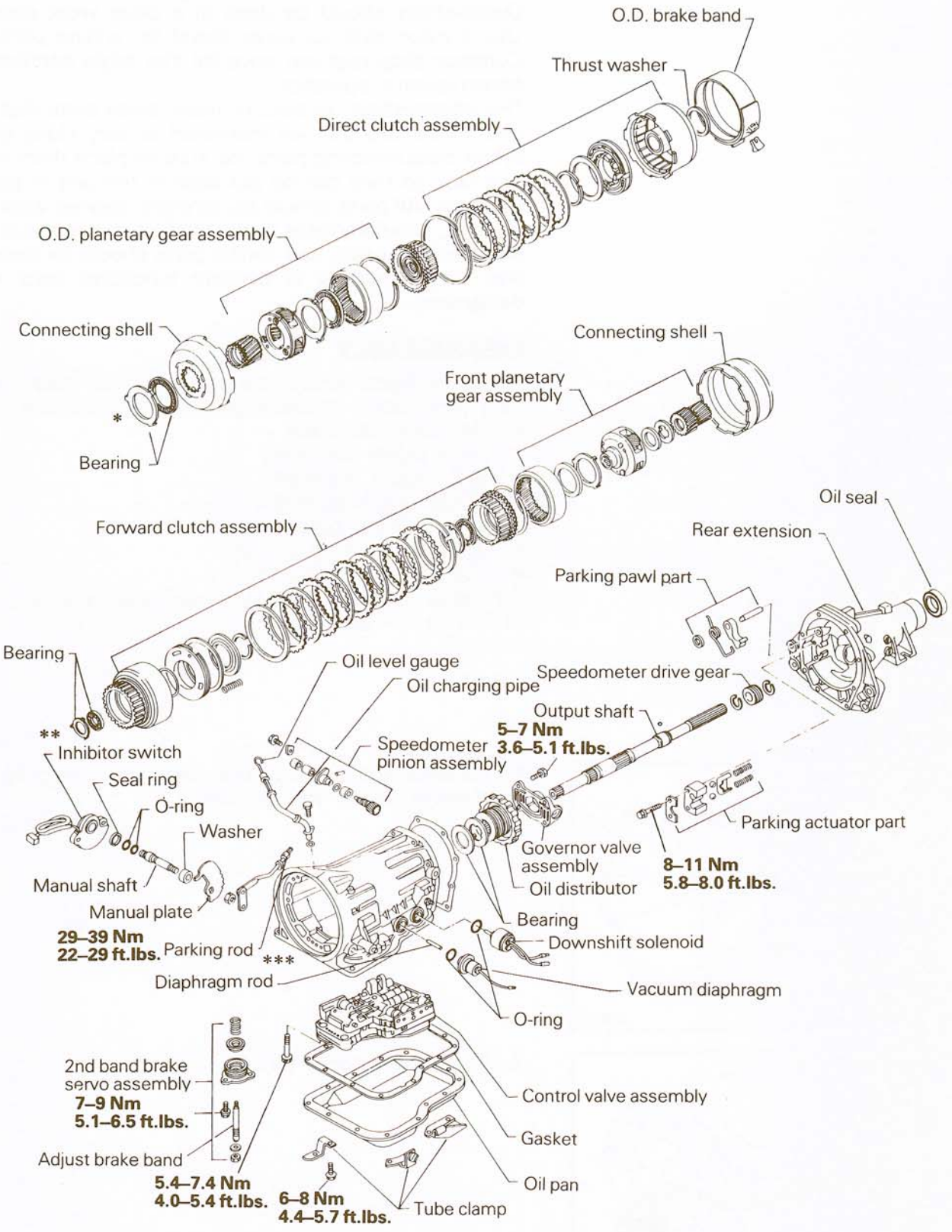

JAT037

STB Revision

SERVICE NOTES

Before proceeding with disassembly, thoroughly clean the outside of the transmission. It is important to prevent contamination by dirt or other foreign matter.
Disassembly should be done in a clean work area.
Use a nylon cloth or paper towel for wiping parts clean. Common shop rags can leave lint that might interfere with the transmission's operation.
The transmission consists of many small parts that are quite alike in construction yet machined to very close tolerances. When disassembling parts, be sure to place them in order in part rack so they can be put back in the unit in their proper positions. All parts should be carefully cleaned with a general purpose, non-flammable solvent before inspection or reassembly. Gaskets, seals, and similar parts should be replaced. It is also very important to perform functional tests whenever designated.

DISASSEMBLY

The steps below show disassembly of the following component parts down to sub-assembly configurations.

- Oil pump assembly
- Front clutch assembly
- Rear clutch assembly
- Direct clutch assembly
- Control valve assembly
- Governor valve assembly
- Planetary gear assembly

For repair procedures of each sub-assembly, refer to page 21-105 to 21-126.

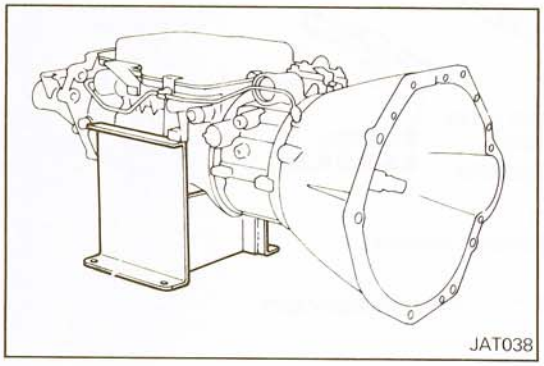
JAT038

1. Remove torque converter and drain transmission fluid through end of rear extension.

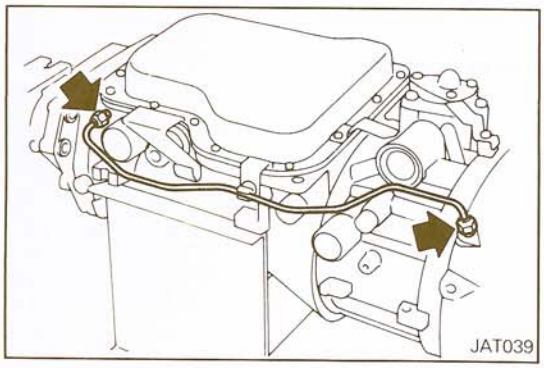
JAT039

2. Remove governor tube.

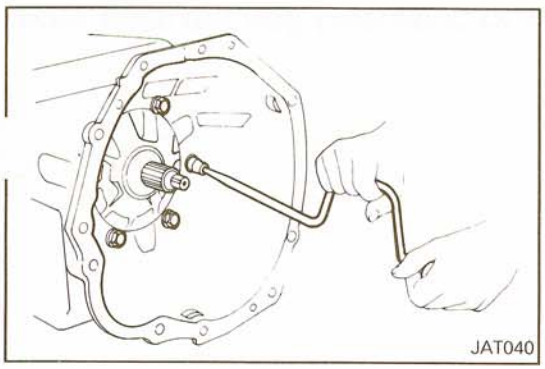
JAT040

3. Remove converter housing.

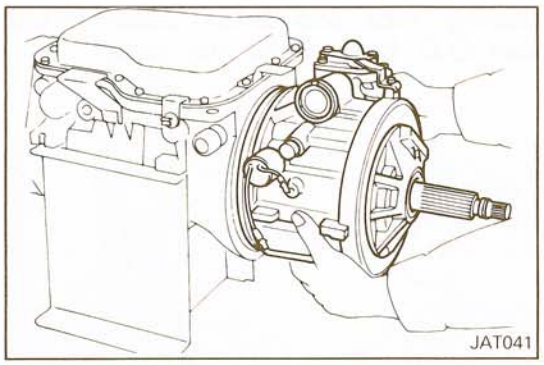
JAT041

4. Remove O.D. component assembly, then remove high-reverse clutch (Front) thrust washer and needle bearing and race.

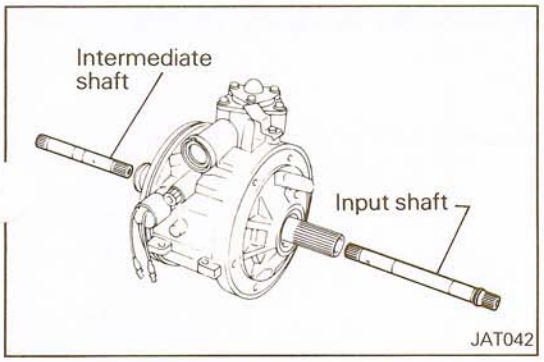

JAT042

5. Remove input shaft and intermediate shaft.

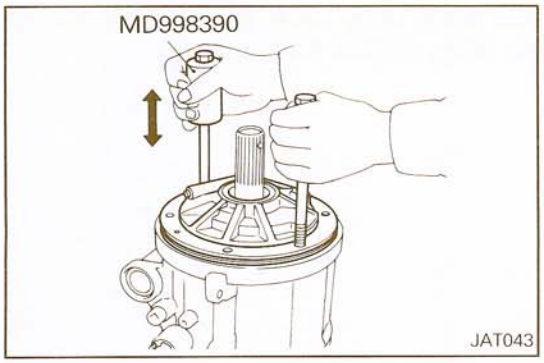

JAT043

6. Attach the special tool to oil pump and remove oil pump from O.D. case.

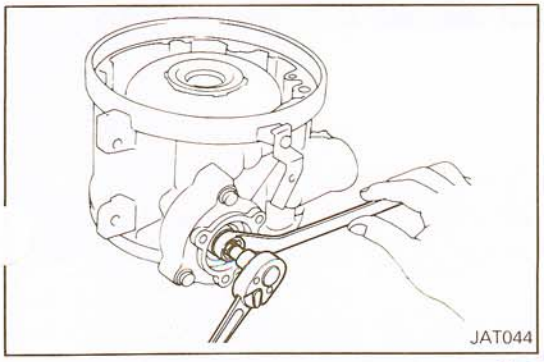
JAT044

7. Remove O.D. servo cover, then loosen O.D. band servo piston stem.

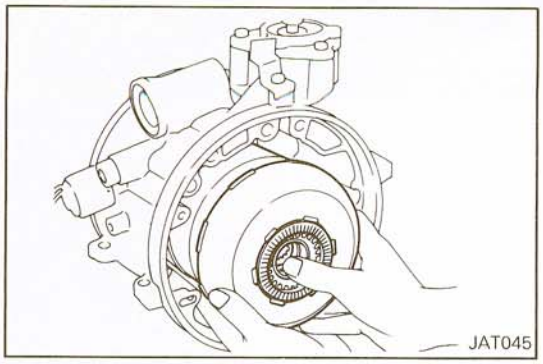

8. Remove O.D. pack (O.D. planetary gear and direct clutch assembly).

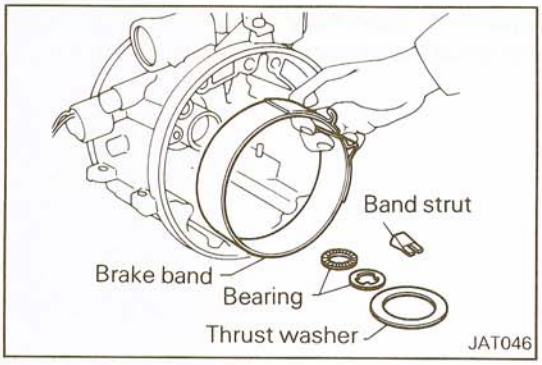

9. Remove needle bearing, race and direct clutch thrust washer, then remove O.D. brake band and strut.

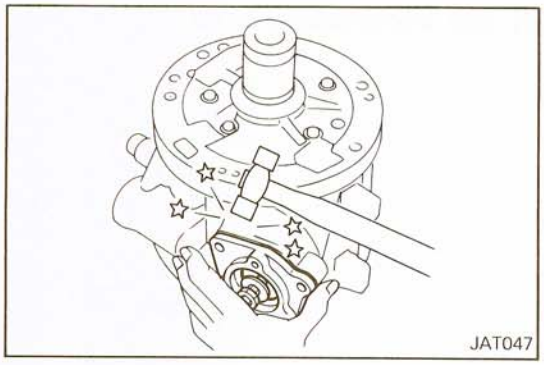

10. Remove O.D. servo assembly by lightly tapping retainer.

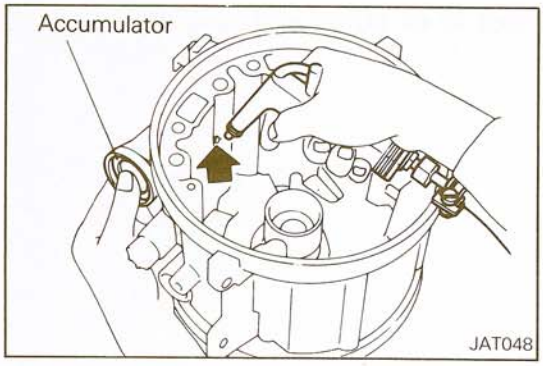

11. Remove accumulator snap ring, then apply pressure to remove accumulator plug, piston and spring.

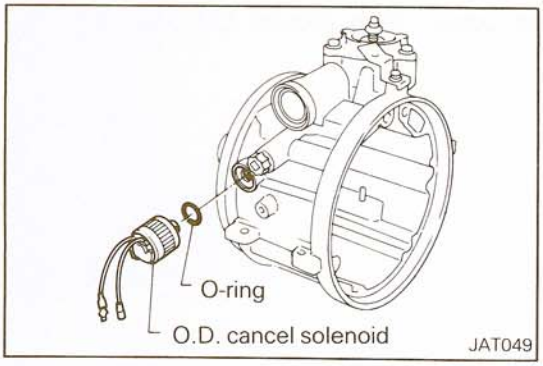

12. Remove O.D. cancel solenoid and O-ring.

STB Revision

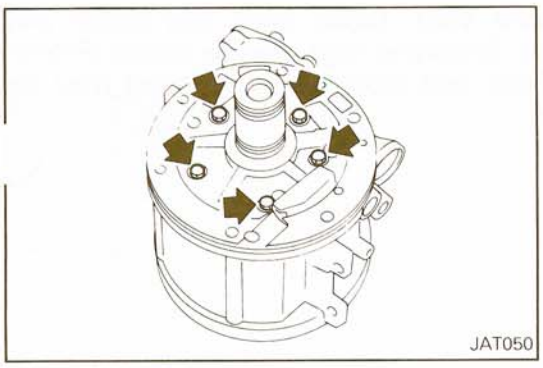
JAT050

13. Remove drum support from O.D. case.

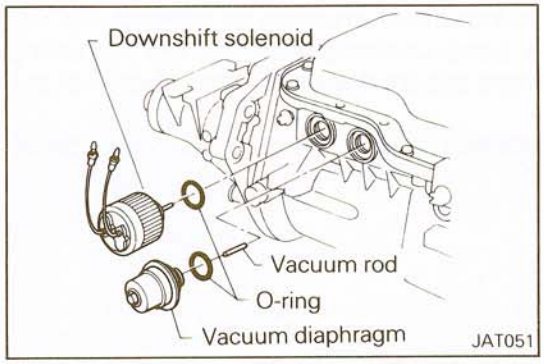

JAT051

14. Remove downshift solenoid, vacuum diaphragm, rod and O-rings.
15. Remove speedometer pinion from rear extension.

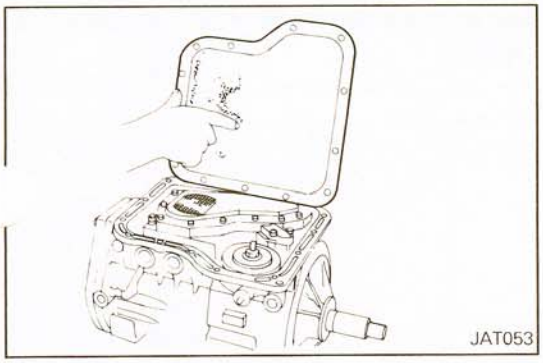
JAT053

16. Remove oil pan and inspect its contents. An analysis of any foreign matter can indicate the types of problems to look for. If the fluid is very dark, smells burned, or contains foreign particles, the frictional material (clutches, band) may need replacement. A tacky film that will not wipe clean indicates varnish build up which can cause valves, servo and clutches to stick and may inhibit pump pressure.

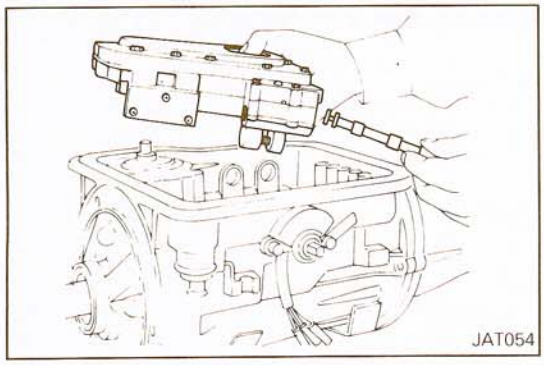
JAT054

17. Remove control valve body.
Remove manual valve from valve body as a precaution, to prevent valve from dropping out accidentally.

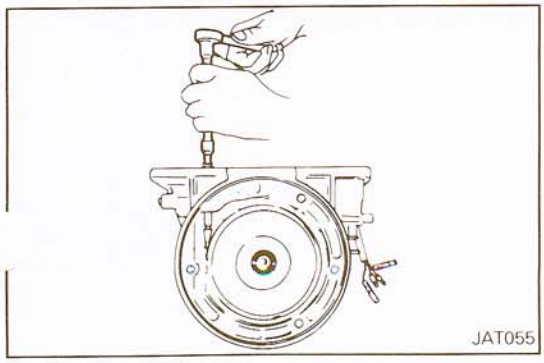
JAT055

18. Loosen 2nd band servo piston stem lock nut and tighten piston stem. If it turns more than two turns, the band is worn out. Back off band servo piston stem to release band.

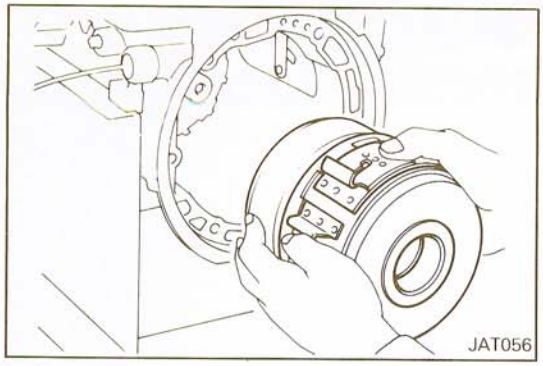
JAT056

19. Remove brake band strut. Brake band and clutch and planetary gear pack [including high-reverse clutch (Front), forward clutch (Rear) and front planetary gear] may be removed together.

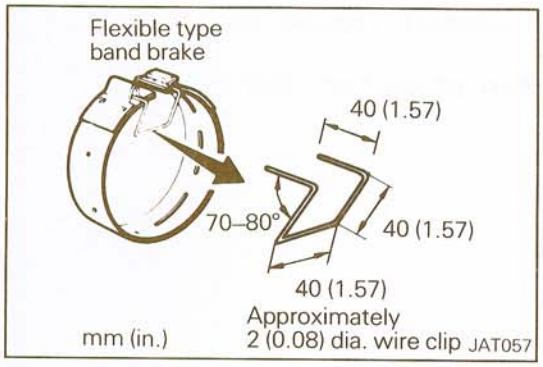

20. To prevent brake linings from cracking or peeling, do not stretch the flexible band unnecessarily. Before removing the brake band, always secure it with a clip as shown in the illustration.
Leave the clip in position after removing the brake band.

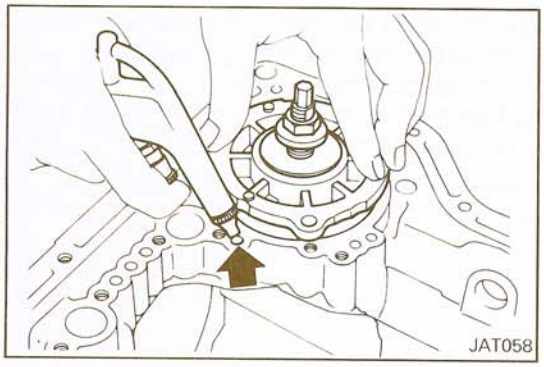
JAT058

21. Remove 2nd band servo retaining bolts. Apply pressure to remove 2nd band servo.

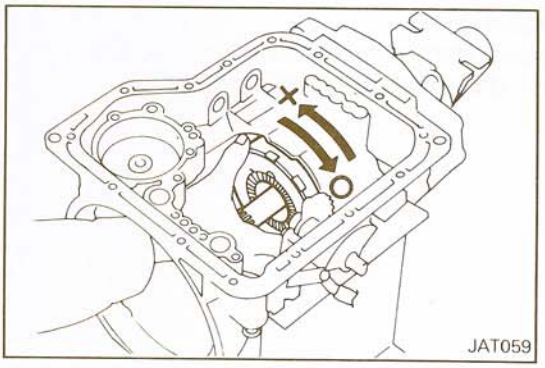
JAT059

22. Check one-way clutch to see if it operates properly.

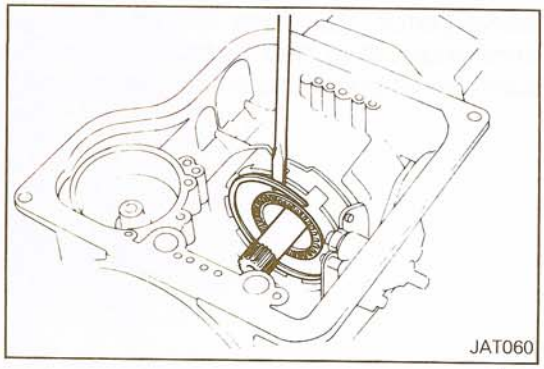
JAT060

23. Remove rear planetary carrier snap ring and rear planetary carrier.

STB Revision

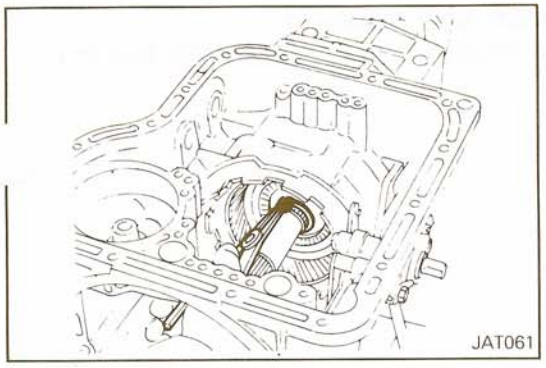

24. Remove output shaft snap ring.

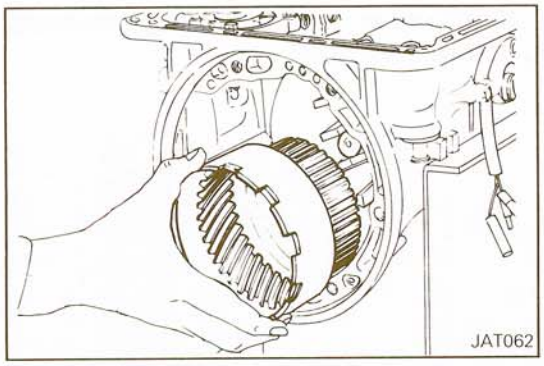

25. Remove connecting drum with internal gear.

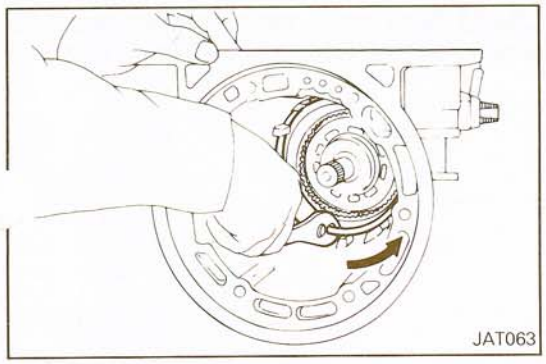

26. Pry off one end of snap ring with a screwdriver. Remove snap ring from low and reverse brake assembly while applying plier force in direction of arrow.

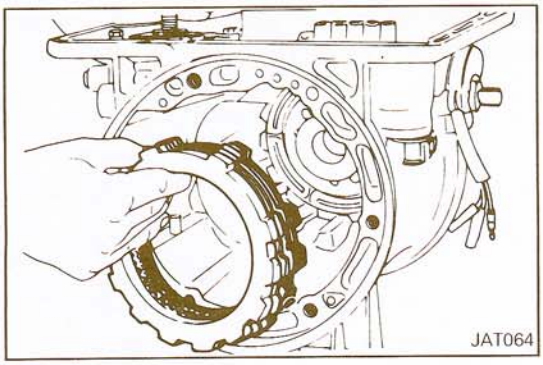

27. Remove low and reverse brake clutch assembly.

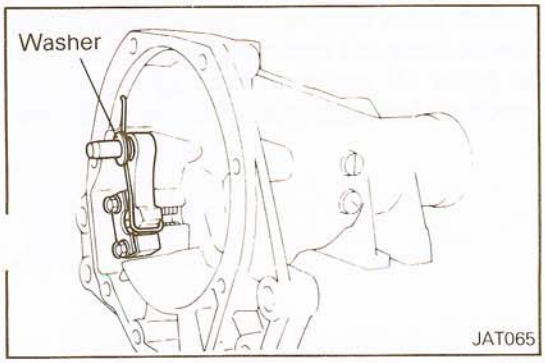

28. Remove rear extension.
Be careful not to lose parking pawl, spring and retainer washer.

STB Revision

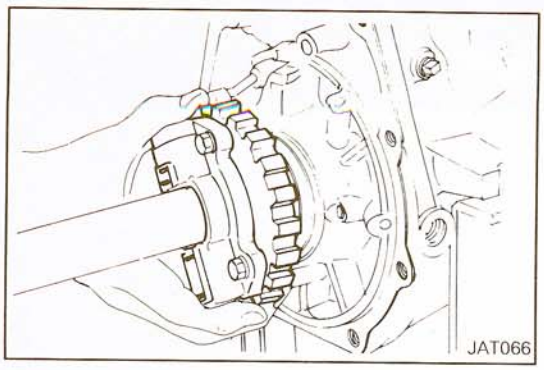

29. Remove output shaft with governor.
30. Remove governor thrust washer and needle bearing.

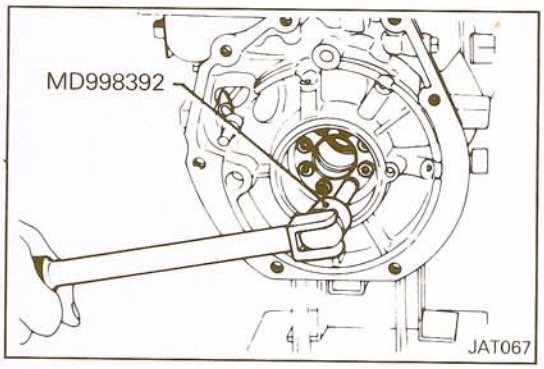

31. Remove one-way clutch inner race attaching hex-head slotted bolts using the special tool.

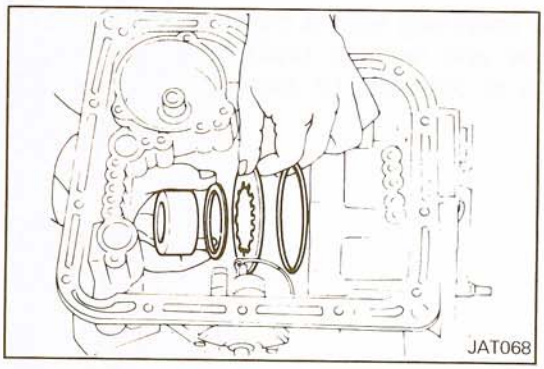

32. Remove one-way clutch inner race, return thrust washer, low and reverse return spring and spring thrust ring.

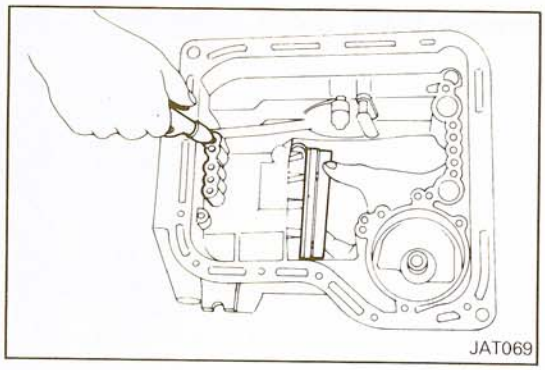

33. Using an air gun with a tapered rubber tip, carefully apply air pressure to remove low and reverse brake piston.

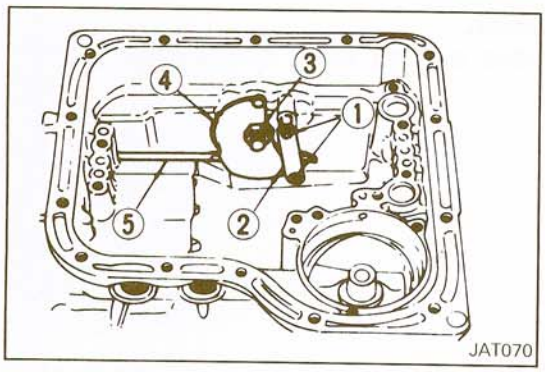

34. Pry off snap ring (1) from both ends of parking brake lever (2) and remove the lever. Back off manual shaft lock nut (3) and remove manual plate (4) and parking rod (5).
35. Remove inhibitor switch and manual shaft by loosening two retaining bolts.

REASSEMBLY

N21LF- -

When installing/assembling needle bearing, bearing race, snap ring and O-ring (seal ring), use the following illustration as a guide to installation procedures and locations.

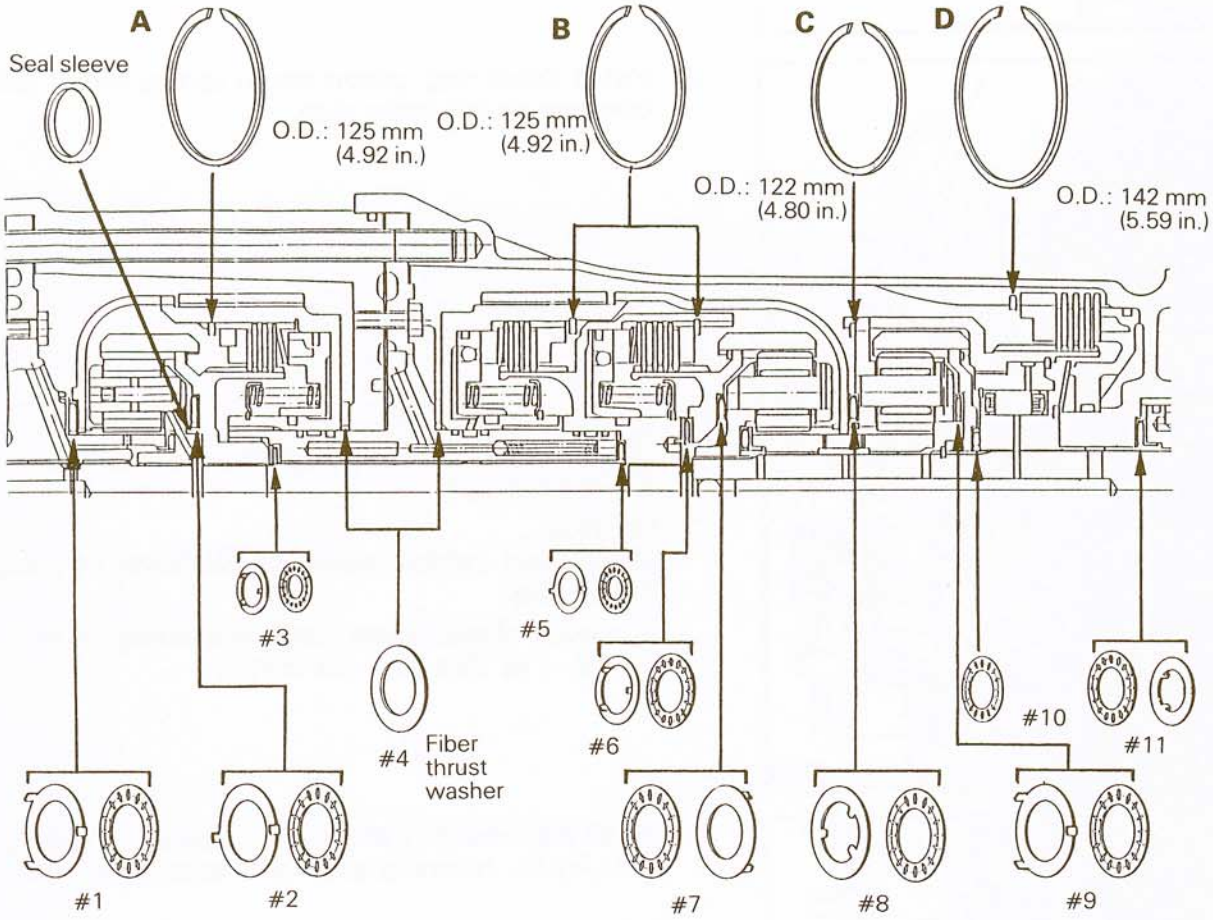

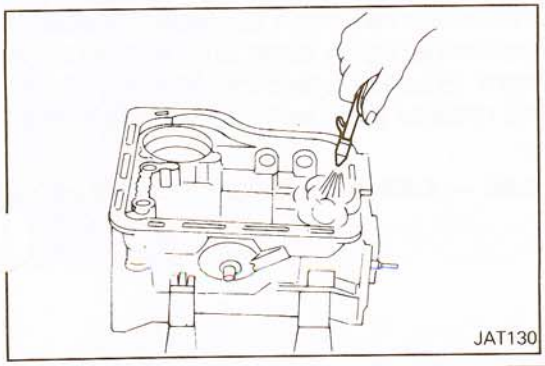

1. Before proceeding with the reassembly of all components, it is important to verify that the case, housing and parts are clean and free from dust, dirt and foreign matter (use air gun). Have a tray available with clean transmission fluid for lubricating parts.
   Petroleum jelly can be used to secure washers during installation. All new seals and rings should have been installed before beginning final assembly.

STB Revision

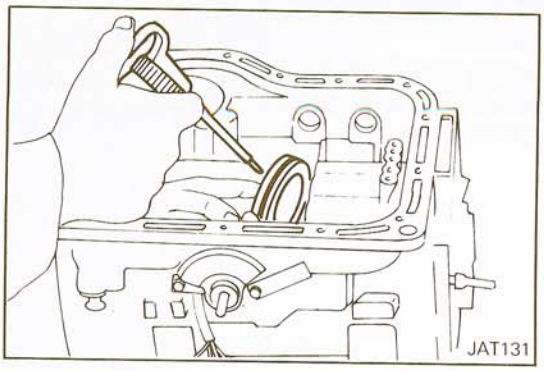

2. Lubricate and install low and reverse piston into the case.

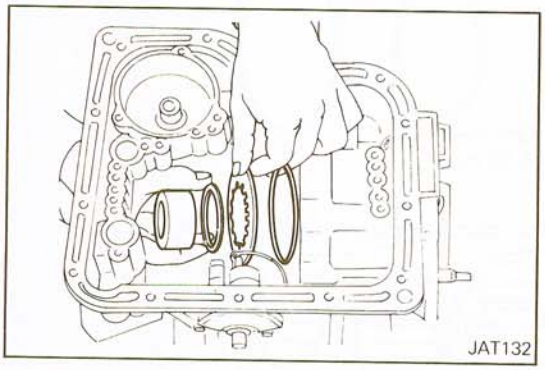

3. Install thrust ring, piston return spring, thrust washer and one-way clutch inner race.

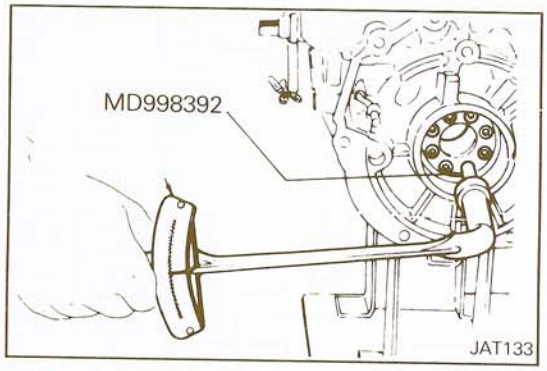

4. Tighten inner race attaching bolts to specified torque using the special tool.

Caution
Check that return spring is centered on race before tightening.

One-way clutch inner race tightening bolt:
13 – 18 Nm (9 – 13 ft.lbs.)

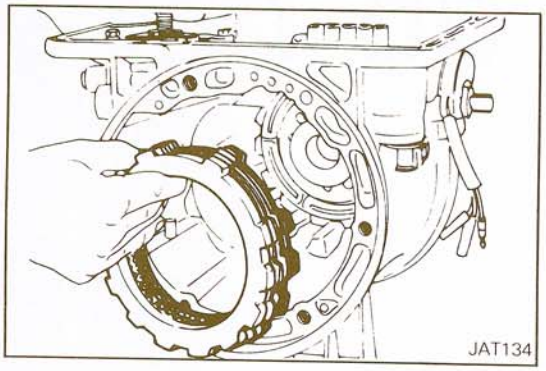

5. Install steel dished plate first, then steel and friction plates, and, finally, retaining plate and snap ring.

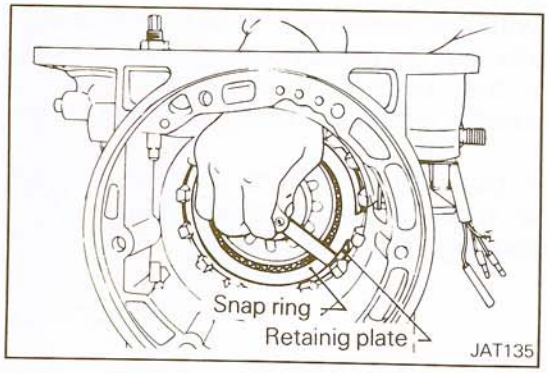

6. After low and reverse brake has been completely assembled, measure clearance between snap ring and retainer plate. If measurement exceeds specifications it can be adjusted by replacing retainer plate with one of a different thickness.

Standard value: 0.80 – 1.25 mm (0.031 – 0.049 in.)

STB Revision

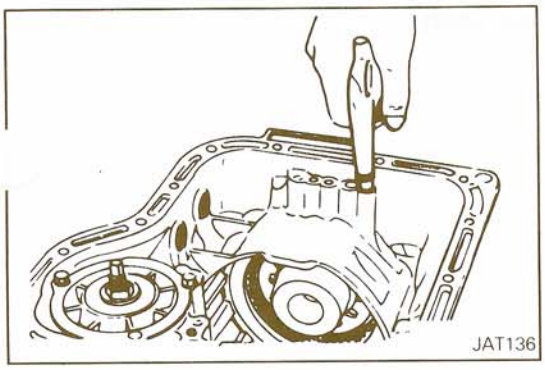
JAT136

7. Using an air gun with a tapered rubber tip, check low and reverse brake operation.

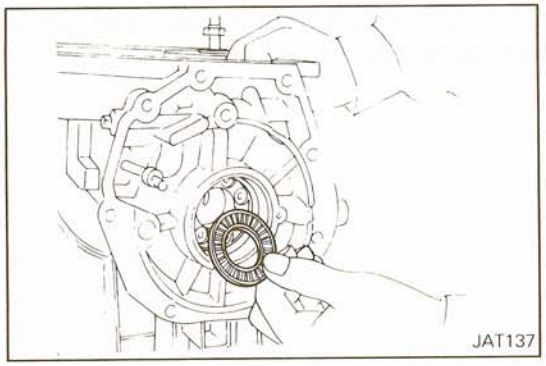
JAT137

8. Install governor thrust washer and needle bearing.

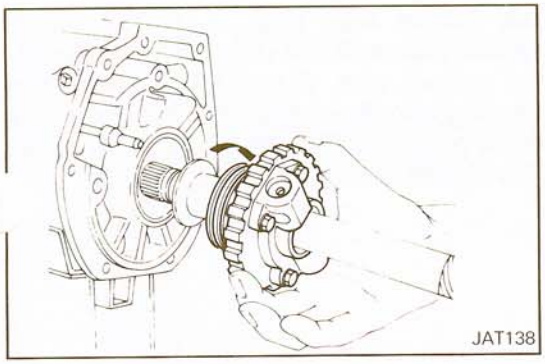
JAT138

9. Slide governor distributor assembly on output shaft from front of shaft. Install shaft and governor distributor into case, using care not to damage distributor rings.

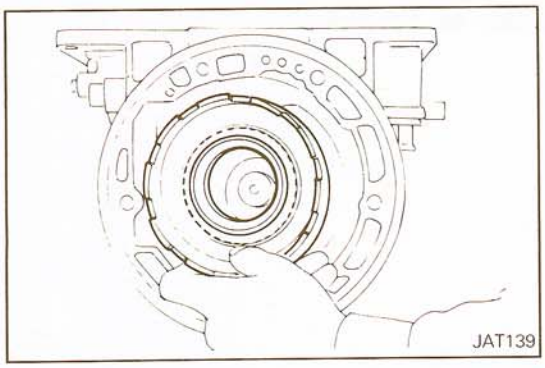
JAT139

10. Install connecting drum with sprag by rotating drum clockwise using a slight pressure and wobbling to align plates with hub and sprag assembly. Connecting drum should now be free to rotate clockwise only. This check will verify that sprag is correctly installed and operative.

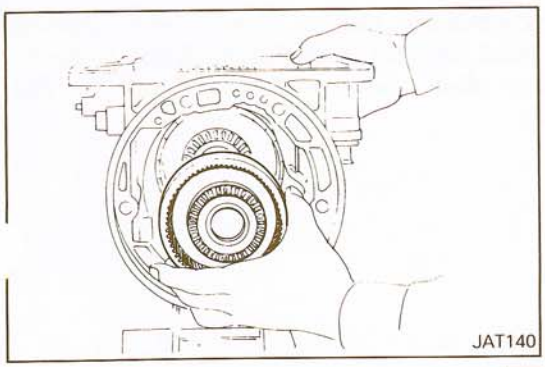
JAT140

11. Install rear internal gear.

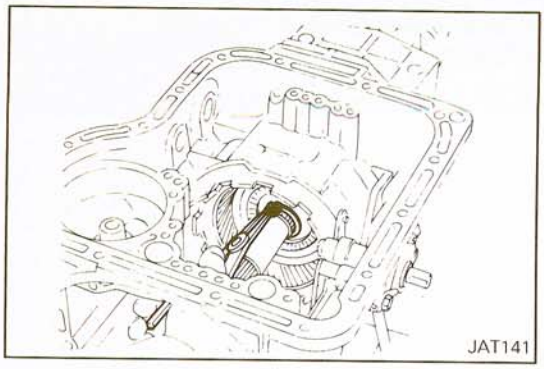

12. Install snap ring on shaft.

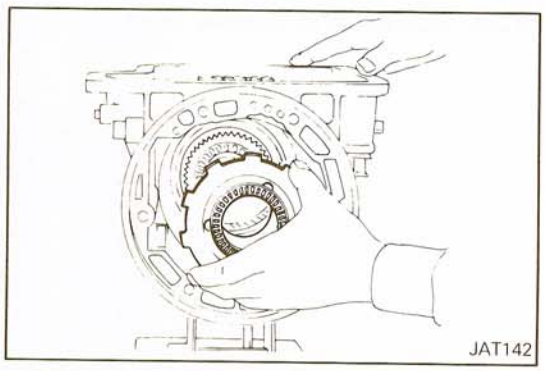

13. Secure thrust bearing and thrust washer with petroleum jelly and install rear planetary carrier.

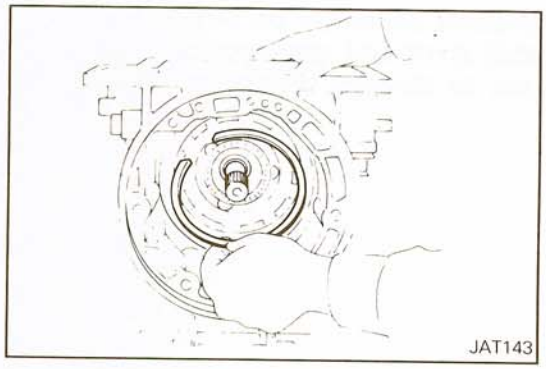

14. Install rear planetary carrier snap ring.
This snap ring is thinner than a clutch drum snap ring so be sure you are using correct size. If you have insufficient space to install snap ring into drum groove, pull connecting drum forward as far as possible. This will give you sufficient groove clearance to install drum snap ring.

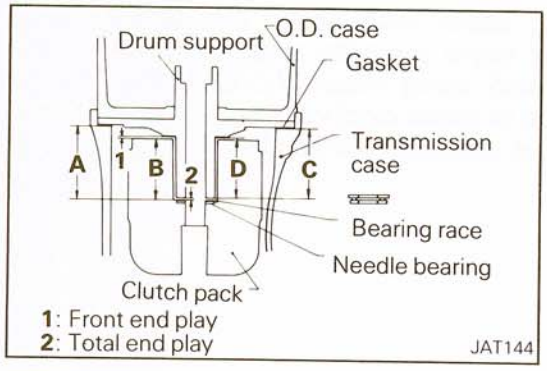

15. Adjust front end play as follows:

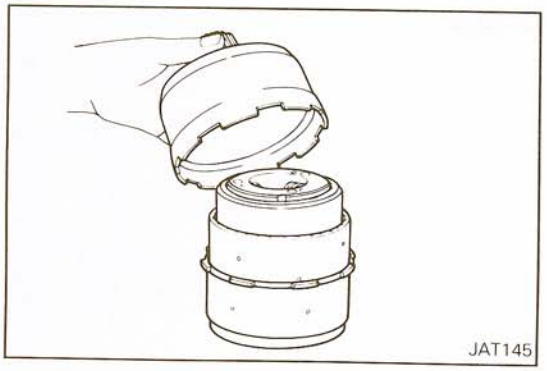

(1) Assemble high-reverse clutch (Front) and forward clutch (Rear), front internal gear, front planetary carrier and connecting shell. Secure thrust bearings with petroleum jelly.

STB Revision

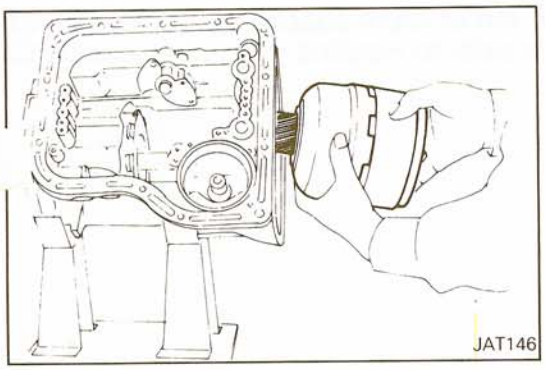
JAT146

(2) Install assembly into transmission case. Check that parts are properly seated before proceeding with measurements.

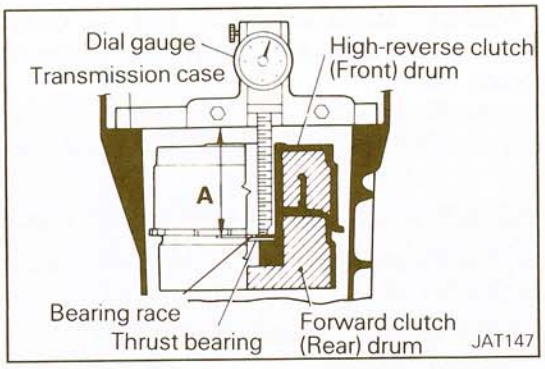

JAT147

(3) Using a dial gauge or caliper with a seven inch base, measure from rear hub thrust bearing race to case (dimension A).

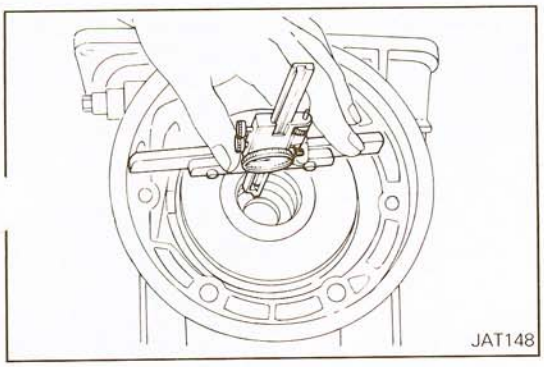
JAT148

(4) Assemble high-reverse clutch (Front) and forward clutch (Rear) drum assemblies together and lay them flat on bench. Be sure rear hub thrust bearing is properly seated.

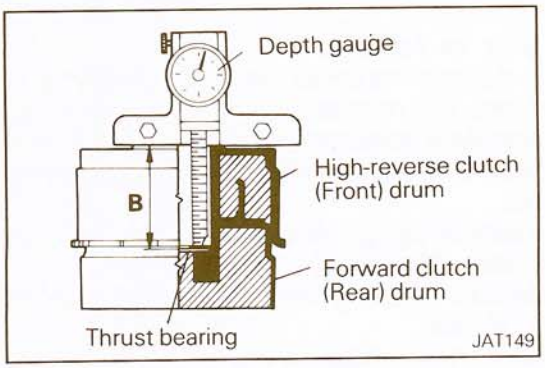

JAT149

Measure from face of clutch drum to top of thrust bearing race (dimension B).

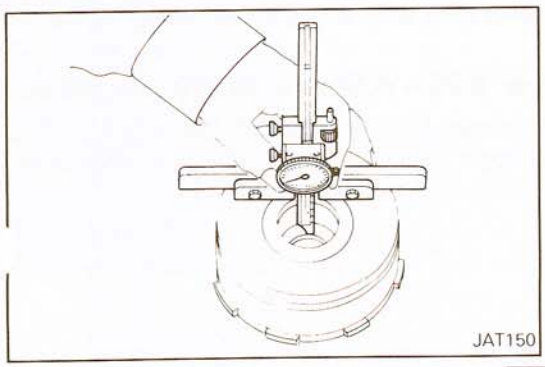
JAT150

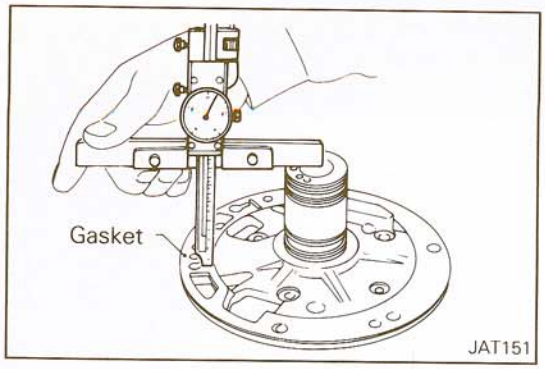

(5) Measure from top of drum support shaft (front clutch and rear clutch side) to installed gasket (dimension C).

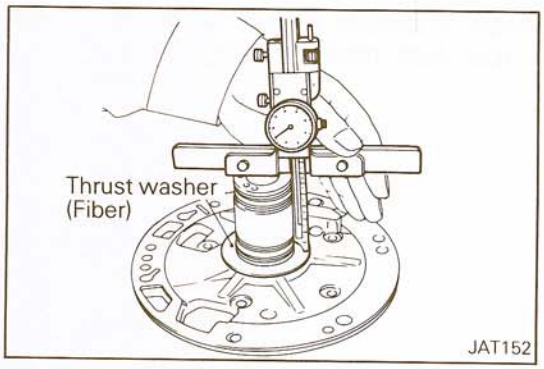

(6) Install thrust washer. Measure from top of drum support shaft (front clutch and rear clutch side) to thrust washer (dimension D).

(7) Difference between dimension [A – 0.1 mm (0.004 in.) – B] and (C – D) is front end play and must be within standard value.

Standard value: 0.5 – 0.8 mm (0.020 – 0.031 in.)

Front end play can be adjusted with high-reverse clutch (Front) thrust washers of different thickness.

Available High-Reverse Clutch (Front) Thrust Washer

Thickness mm (in.)	Part number
1.3 (0.051)	MD610212
1.5 (0.059)	MD610213
1.7 (0.067)	MD610214
1.9 (0.075)	MD610215
2.1 (0.083)	MD610216
2.3 (0.091)	MD610217
2.5 (0.098)	MD610218
2.7 (0.106)	MD610219

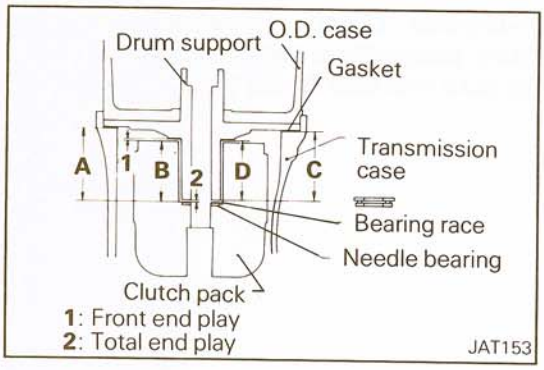

16. Adjust total end play as follows:
This adjustment is seldom required because this type of thrust bearing and race will normally show very little wear. We also have a standard tolerance of 0.25 to 0.50 mm (0.0098 to 0.0197 in.). However, we are presenting correct checking procedure.
(1) Measure dimension A using instructions in steps (1), (2) and (3) under para. 15 above.
(2) Measure dimension C using instructions in step (5) under para. 15 above.
(3) Difference between dimension [A – 0.1 mm (0.004 in.)] and C is total end play and it must be within standard value.

Standard value: 0.25 – 0.50 mm (0.010 – 0.020 in.)

If difference between [A – 0.2 mm (0.008 in.)] and C is not within tolerance, select proper size oil pump cover bearing race.

STB Revision

Available Oil Pump Cover Bearing Race

Thickness mm (in.)	Part number
1.2 (0.047)	MD610221
1.4 (0.055)	MD610222
1.6 (0.063)	MD610223
1.8 (0.071)	MD610224
2.0 (0.079)	MD610225
2.2 (0.087)	MD610226

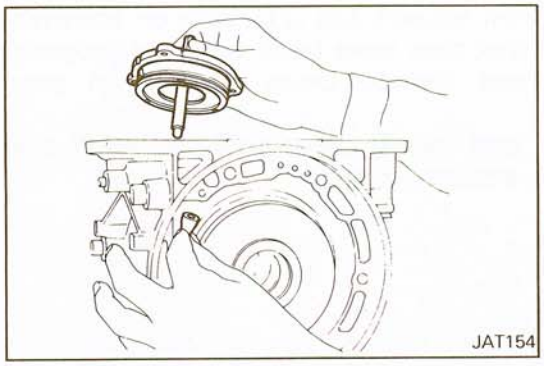
JAT154

17. Install brake band, band strut and band servo. Lubricate servo O-rings before installing. Care should be taken to avoid damaging O-rings when reassembling.

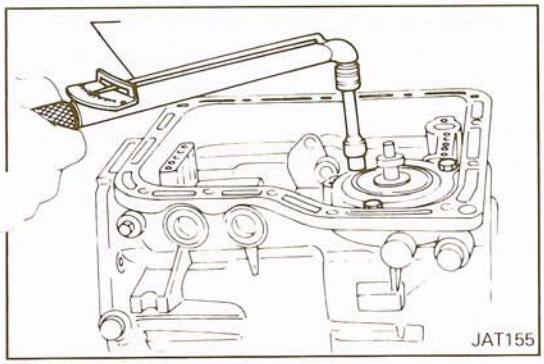
JAT155

18. Install and torque the retainer bolts. Loosen piston stem.
Servo piston retainer bolt: 7 – 9 Nm (5 – 6 ft.lbs.)

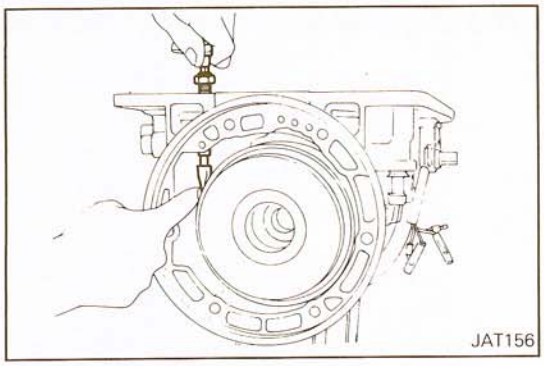
JAT156

19. Finger tighten brake band servo piston stem enough to prevent brake band and strut from falling out. Do not adjust brake band at this time.

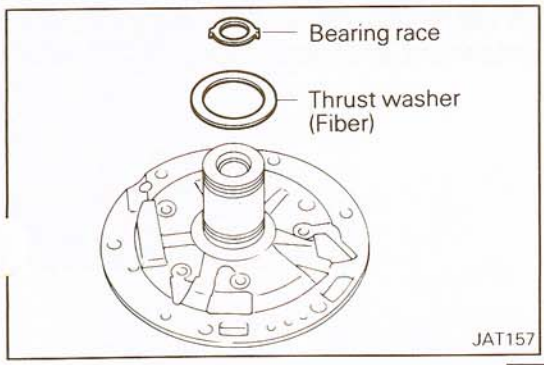

JAT157

20. Apply petroleum jelly to bearing race and thrust washer, then mount them on drum support.

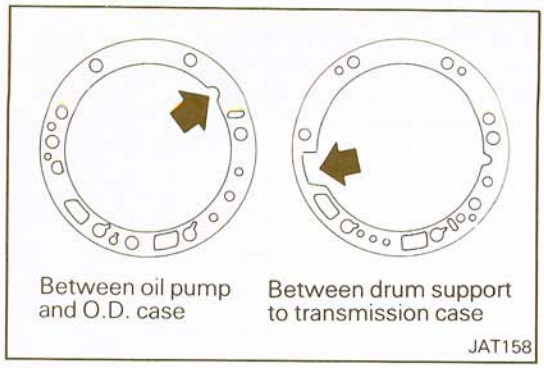

21. Mount drum support gasket on drum support after coating with petroleum jelly. Apply automatic transmission fluid to O-ring of drum support. Align drum support with O.D. case to transmission case and install.

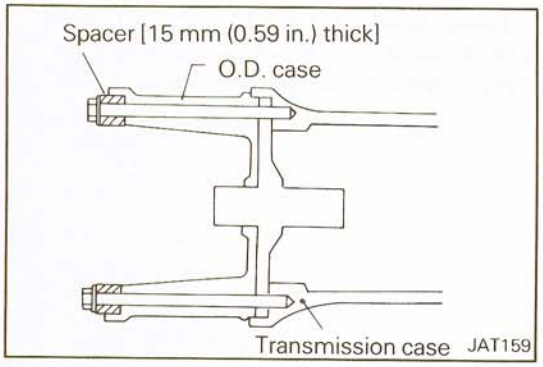

Before installing drum support and O.D. case on transmission case, ensure that they have been centered properly. Refer to Component Service Drum Support on page 21-107.
Install O.D. case and temporarily tighten it using two converter housing securing bolts.

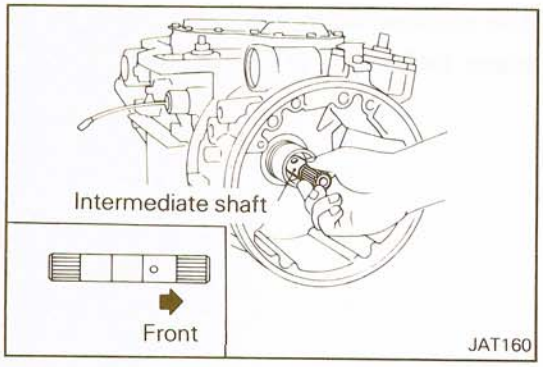

22. Insert intermediate shaft being especially careful of its direction.

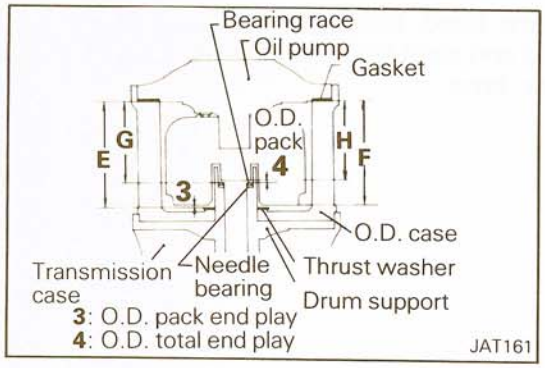

23. Adjust O.D. pack end play and O.D. total end play as follows:

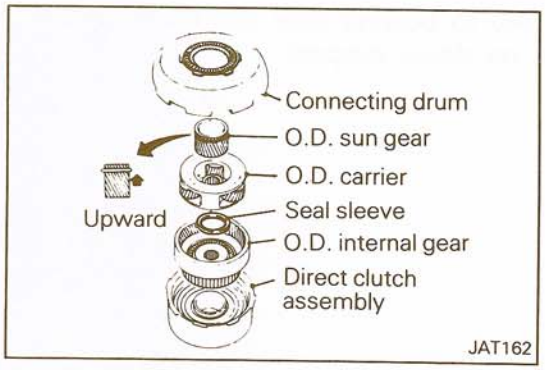

(1) Assemble direct clutch assembly, O.D. planetary gear set and connecting drum, and install them on O.D. pack.

STB Revision

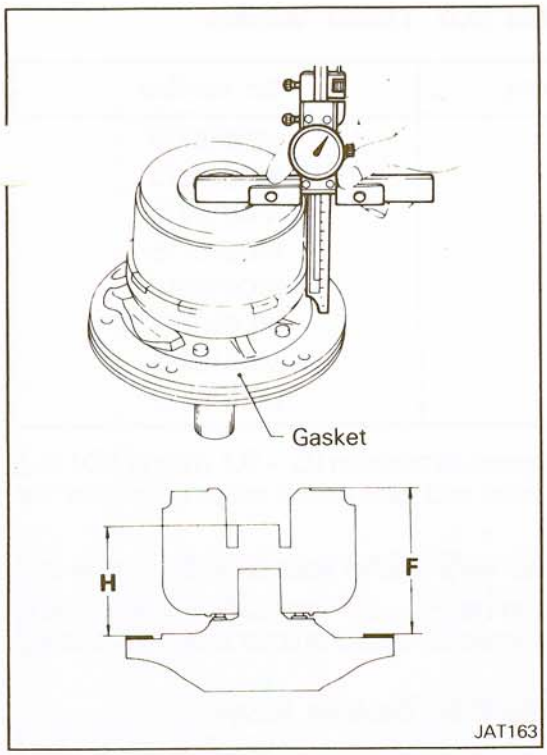

(2) Install oil pump bearing, gasket and O.D. pack on oil pump, and measure dimensions F and H.

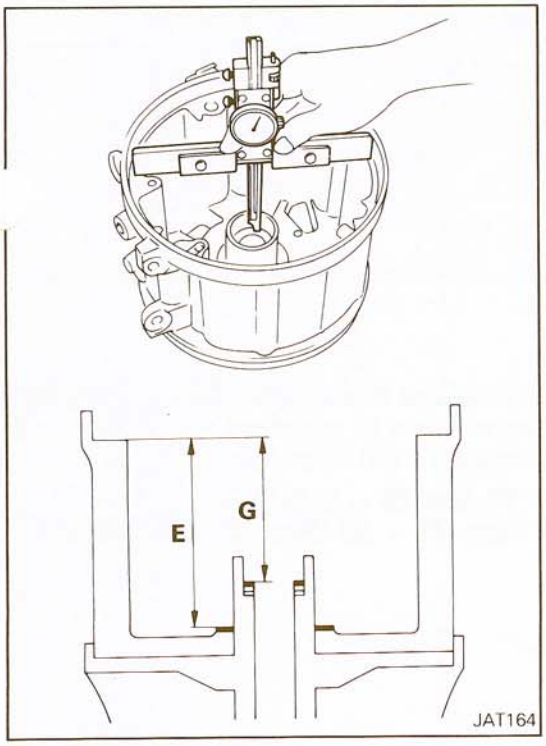

(3) Attach thrust washer and needle bearing to drum support and O.D. case, and measure dimensions E and G.

(4) Difference between dimension [E – 0.1 mm (0.004 in.)] and F is O.D. pack end play and must be within the standard value.

Standard value: 0.5 – 0.8 mm (0.020 – 0.031 in.)

O.D. pack end play can be adjusted with O.D. thrust washers of different thicknesses (these parts are the same as the front clutch thrust washers).

STB Revision

Available O.D. Thrust Washer

Thickness mm (in.)	Part number
1.3 (0.051)	MD610212
1.5 (0.059)	MD610213
1.7 (0.067)	MD610214
1.9 (0.075)	MD610215
2.1 (0.083)	MD610216
2.3 (0.091)	MD610217
2.5 (0.098)	MD610218
2.7 (0.106)	MD610219

(5) Difference between dimension [G – 0.1 mm (0.004 in.)] and H is O.D. total end play and it must be within the standard value.

Standard value: 0.25 – 0.50 mm (0.010 – 0.020 in.)

If difference between [G – 0.1 mm (0.004 in.)] and H is not within the tolerance, select proper size O.D. bearing race.

Available O.D. Bearing Races

Thickness mm (in.)	Part number
1.2 (0.047)	MD610415
1.4 (0.055)	MD610416
1.6 (0.063)	MD610417
1.8 (0.071)	MD610418
2.0 (0.079)	MD610419
2.2 (0.087)	MD610420

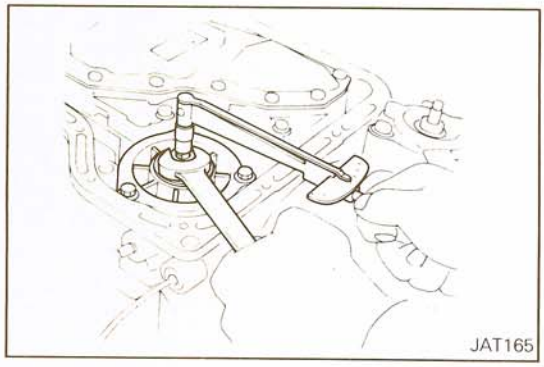

24. Adjust band. Make sure that brake band strut is correctly installed. Torque piston stem to specified value. Back off two full turns and secure with lock nut.

Piston stem: 7 – 10 Nm (5 – 7 ft.lbs.)
Piston stem lock nut: 15 – 39 Nm (11 – 29 ft.lbs.)

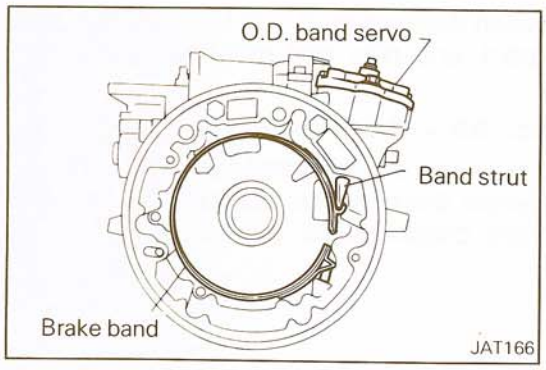

25. Lubricate O.D. servo O-rings with automatic transmission fluid, then install brake band, band strut and O.D. band servo.

STB Revision

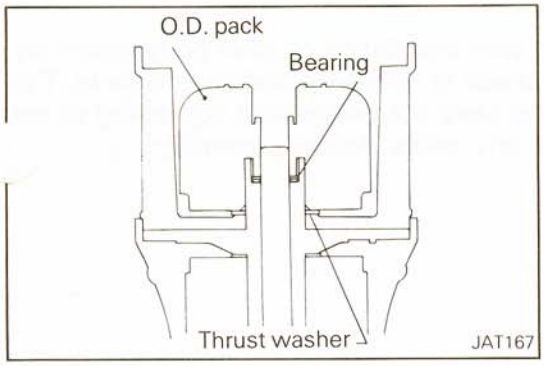

26. Apply automatic transmission fluid to seal ring of direct clutch, then install O.D. bearing and race, O.D. thrust washer and O.D. pack on drum support. Make sure that brake band strut is correctly installed.
27. Apply automatic transmission fluid to O-ring of oil pump, then install needle bearing, race and oil pump.
    Before installing oil pump housing and oil pump on O.D. case, ensure that they have been centered properly.
    Refer to Oil Pump in Component parts.

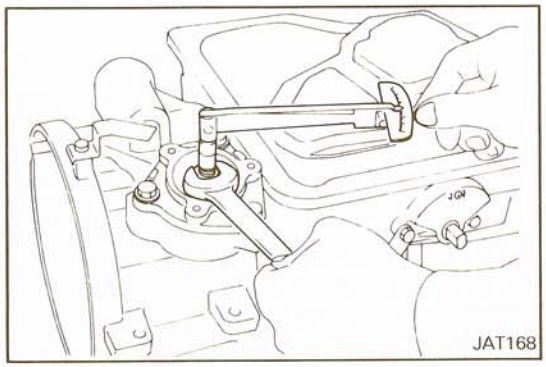

28. Adjust O.D. band. Adjust torque piston stem to the specified value. Back off two full turns and secure with lock nut.

    Piston stem: 7 – 10 Nm (5 – 7 ft.lbs.)
    Piston stem lock nut: 15 – 39 Nm (11 – 29 ft.lbs.)

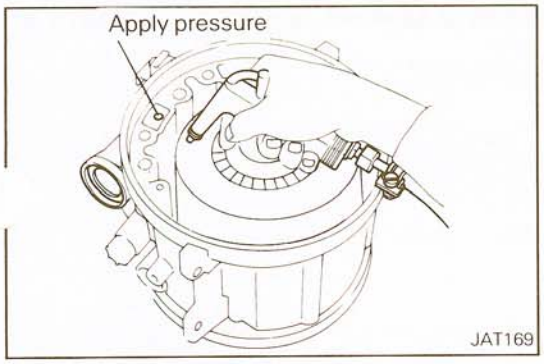

29. Using an air gun with a tapered rubber tip, test O.D. band servo operation.

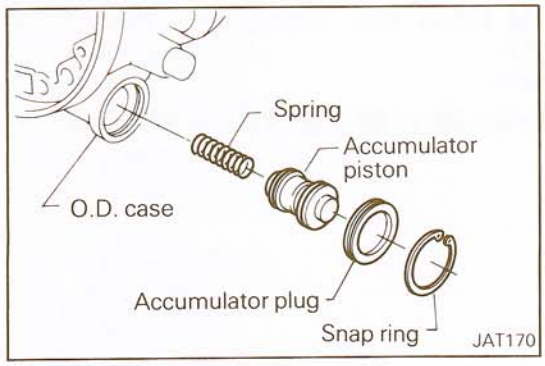

30. Install accumulator parts, then secure with snap ring.

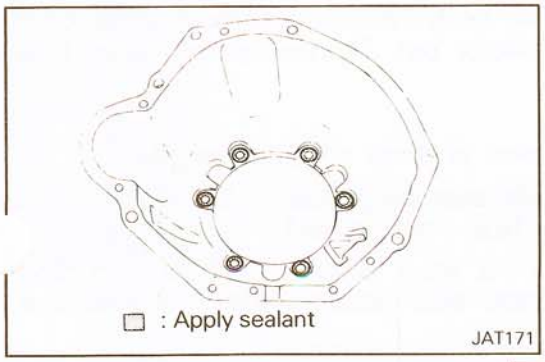

31. Remove the two bolts used to temporarily tighten O.D. case. Apply sealant to seating surfaces of converter housing at bolt locations. Install converter housing on O.D. case and tighten converter housing securing bolts.

    Converter housing bolt: 44 – 54 Nm (33 – 40 ft.lbs.)

STB Revision

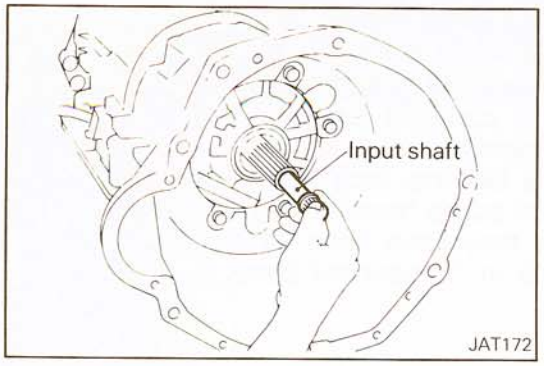

32. Install input shaft.
33. Before proceeding with installation of valve body assembly, perform a final air check of all assembled components. This will ensure that you have not overlocked tightening of anv bolts or damaged any seals during assembly.

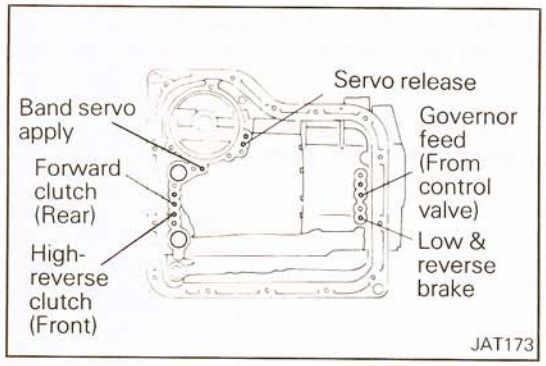

Air check point

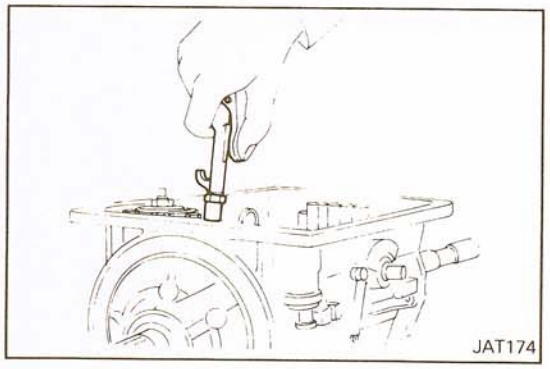

34. Using an air gun with a tapered rubber tip, perform air checks.

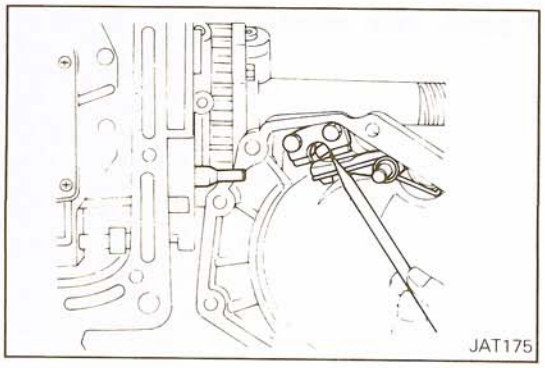

35. Check that parking pawl, pin, spring and washer are assembled correctly.
36. Install rear extension.

Rear extension bolt: 20 – 25 Nm (14 – 18 ft.lbs.)

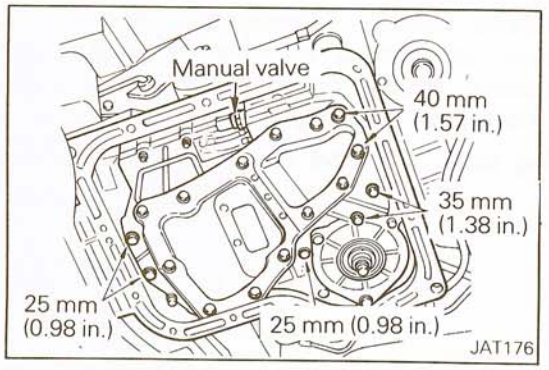

37. Install control valve body. Be sure manual valve is in alignment with selector pin. Tighten control valve body attaching bolts.

NOTE
Attaching bolts come in three different lengths.

Control valve body attaching bolt:
5.4 – 7.4 Nm (4.0 – 5.4 ft.lbs.)

After installing control valve body to transmission case, make sure that manual lever can be moved to all positions.

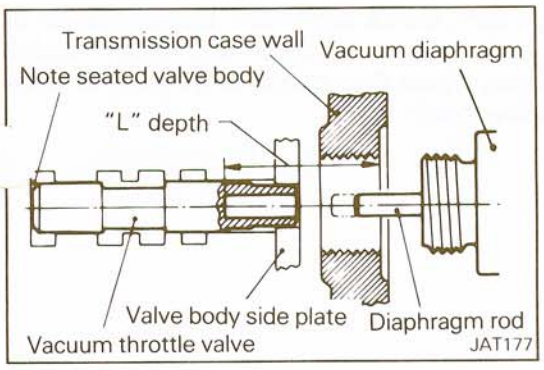

38. Before installing vacuum diaphragm valve, measure depth of hole in which it is inserted. This measurement determines correct rod length to ensure proper performance.

Vacuum Diaphragm Rod Selection

Measured depth "L" mm (in.)	Rod length mm (in.)	Part number
Under 25.55 (1.0059)	29.0 (1.142)	MD610614
25.65 – 26.05 (1.0098 – 1.0256)	29.5 (1.161)	MD610615
26.15 – 26.55 (1.0295 – 1.0453)	30.0 (1.181)	MD610616
26.65 – 27.05 (1.0492 – 1.0650)	30.5 (1.201)	MD610617
Over 27.15 (1.0689)	31.0 (1.220)	MD610618

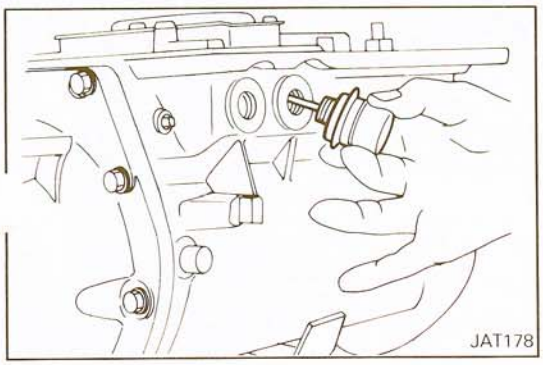

39. Install vacuum diaphragm.
Make sure that vacuum diaphragm rod does not interfere with side plate of control valve.

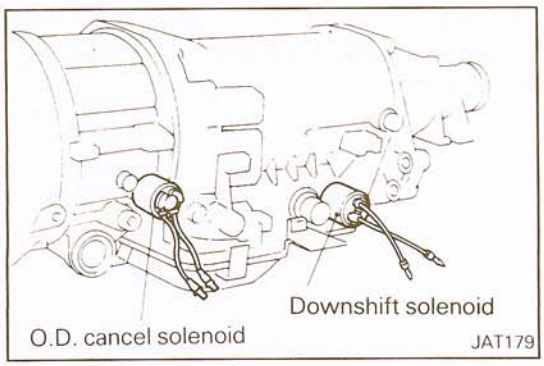

40. Install downshift solenoid, O.D. cancel solenoid.

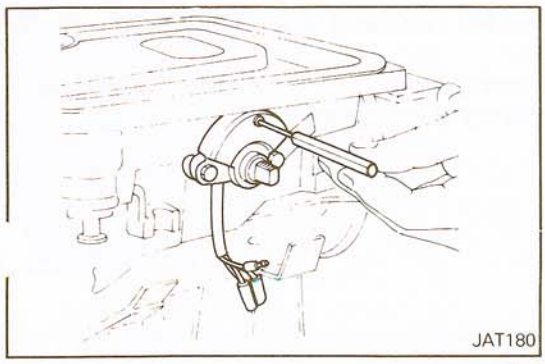

41. Install inhibitor switch. Check for proper operation in each range using a circuit tester. Refer to On-vehicle Service.

STB Revision

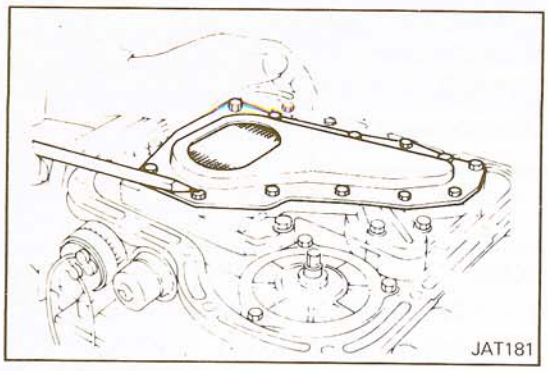
JAT181

42. Before installing oil pan, check alignment and operation of control lever and parking pawl engagement. Blow mechanism with air to clean. Make final check to be sure all bolts are installed in valve body.

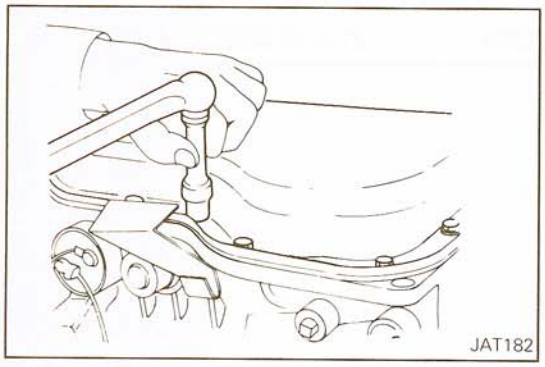
JAT182

43. Install oil pan with new gasket.
Oil pan bolt: 6 – 8 Nm (4.4 – 5.7 ft.lbs.)

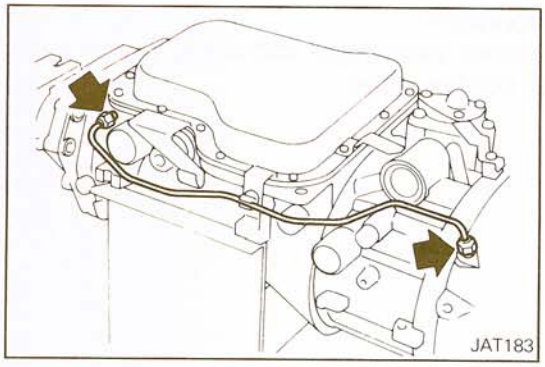
JAT183

44. Install governor tube.

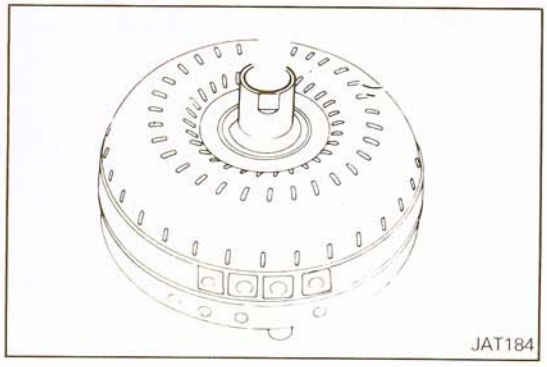
JAT184

45. Carefully inspect torque converter for damage. Check converter hub for grooves caused by hardened seals. Also check bushing contact area.

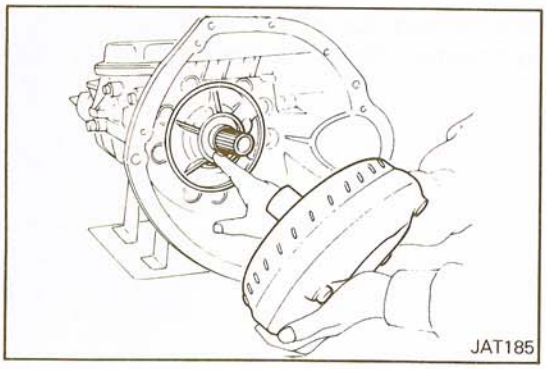
JAT185

46. Lubricate oil pump lip seal and converter neck before installing converter.
Install converter, being sure that converter is properly meshed with oil pump drive gear.

STB Revision

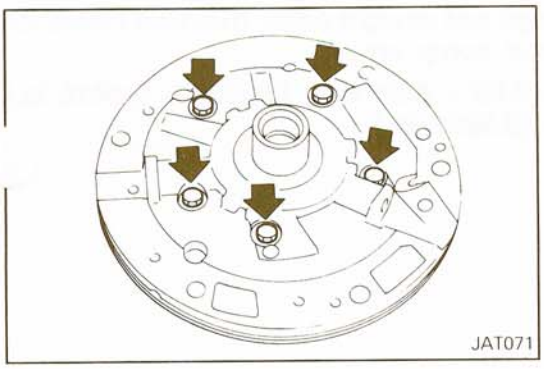
JAT071

OIL PUMP

N21LG--

DISASSEMBLY

1. Remove front pump gasket and O-ring. Inspect pump body, bushing and pump shaft for wear.
2. Remove pump cover from pump housing.

Valve Spring Chart

Valve spring	Wire dia. mm (in.)	Outer coil dia. mm (in.)	No. of active coil	Free length mm (in.)	Installed	
					Length mm (in.)	Load N (lbs.)
Lock-up control valve	0.70 (0.0276)	5.50 (0.2165)	13.5	26.3 (1.035)	16.0 (0.630)	16.7 (3.74)

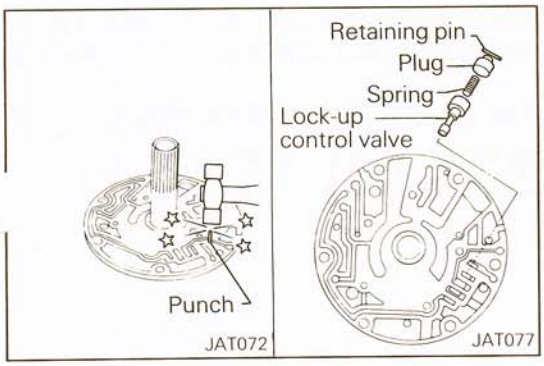

3. Remove retaining pin using a punch [outer dia. 1.5 to 1.8 mm (0.059 to 0.071 in.)], then remove lock-up control valve and spring.
4. Inspect gears, lock-up control valve, spring and all internal surfaces for faults and visible wear.

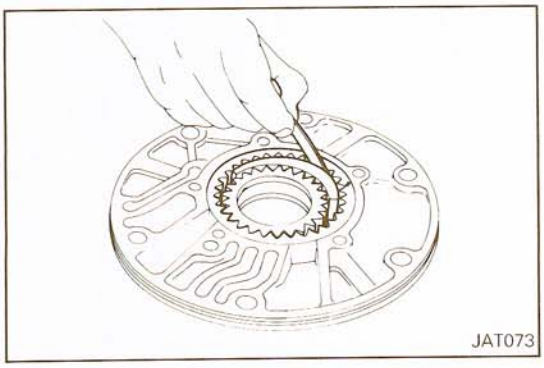
JAT073

5. Measure clearance between outer gear and crescent.
   Standard value: 0.14 – 0.21 mm (0.0055 – 0.0083 in.)
   Limit: 0.25 mm (0.0098 in.)

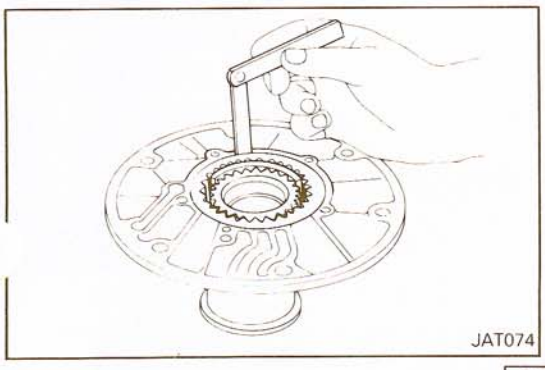
JAT074

6. Measure clearance between outer gear and pump housing.
   Standard value: 0.05 – 0.20 mm (0.0020 – 0.0079 in.)
   Limit: 0.25 mm (0.0098 in.)

STB Revision

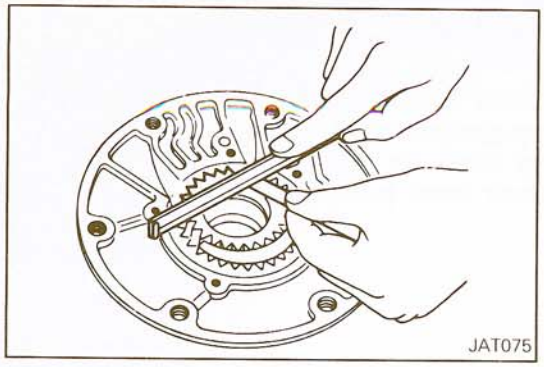
JAT075

7. Using a feeler gauge and straight edge, measure clearance between gears and pump cover.

Standard value: 0.02 – 0.04 mm (0.0008 – 0.0016 in.)
Limit: 0.08 mm (0.0031 in.)

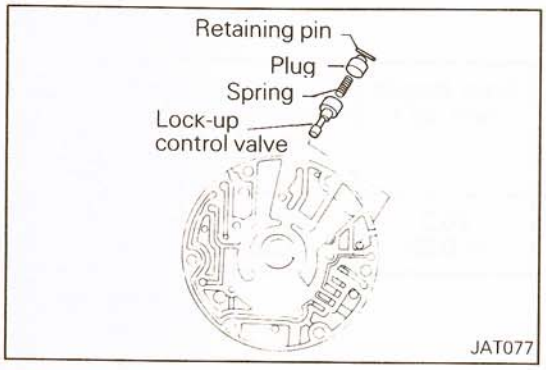

JAT077

REASSEMBLY

1. Install lock-up control valve and spring into oil pump cover, then install retaining pin.

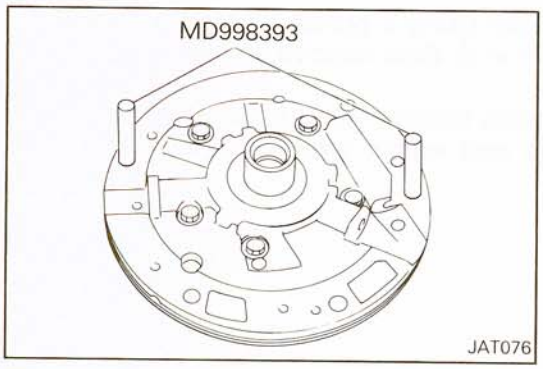

JAT076

2. Install inner and outer pump gears to pump housing.
3. Insert guides into bolt holes and install pump cover onto pump housing.
4. Tighten pump securing bolts to specified torque.

Oil pump housing to oil pump cover:
6 – 8 Nm (4.3 – 5.8 ft.lbs.)

5. Install new O-ring.

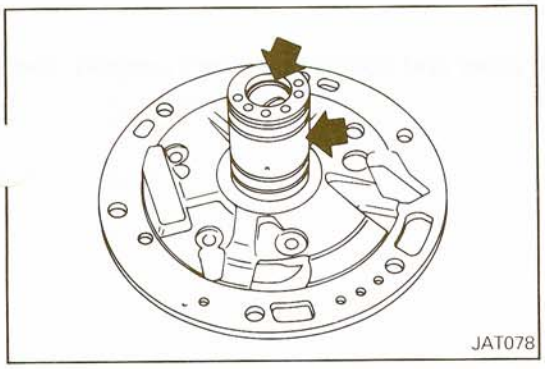
JAT078

DRUM SUPPORT

N21LT--

DISASSEMBLY

1. Inspect drum support bushing and ring groove areas for wear.

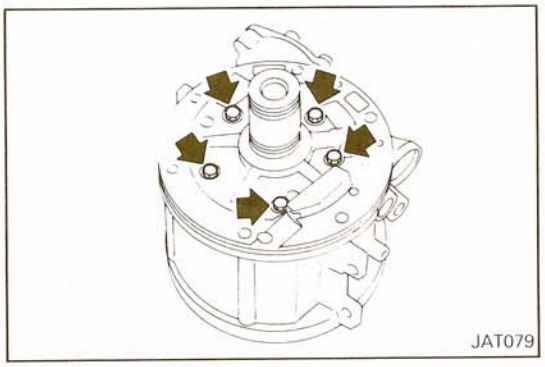
JAT079

2. Remove drum support and gasket from O.D. case.

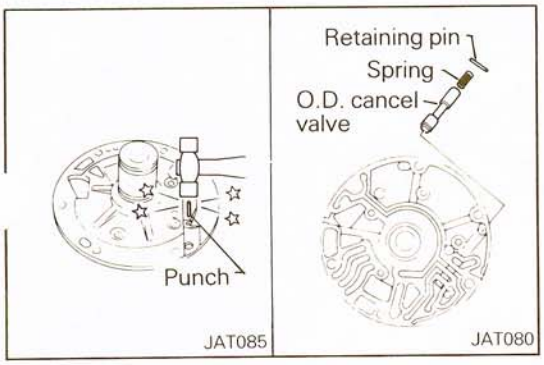

3. Remove retaining pin using a punch [outer dia. 1.5 to 1.8 mm (0.059 to 0.071 in.)], then remove O.D. cancel valve and spring.
4. Don't remove it from contacting face side.
5. Inspect O.D. cancel valve, spring and all internal surfaces for faults and visible wear.

Valve Spring Chart

Valve spring	Wire dia. mm (in.)	Outer coil dia. mm (in.)	No. of active coil	Free length mm (in.)	Installed	
					Length mm (in.)	Load N (lbs.)
O.D. cancel valve	0.65 (0.0256)	4.95 (0.1949)	12.8	23.0 (0.906)	16.0 (0.630)	12.26 (2.76)

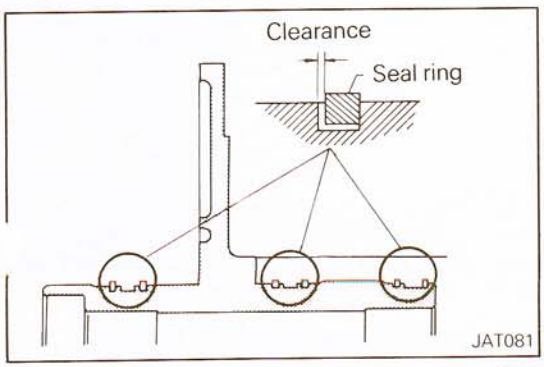

6. Measure clearance between seal ring and ring groove.
   Standard value: 0.05 – 0.20 mm (0.0020 – 0.0079 in.)
7. Replace if the clearance exceeds 0.20 mm (0.0079 in.). Of course, it is good practice to replace all seal rings during an overhaul.

STB Revision

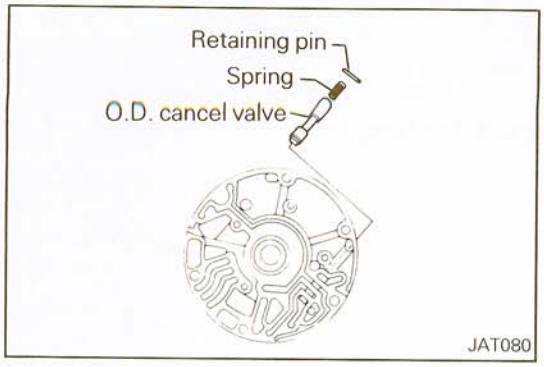

REASSEMBLY

1. Install O.D. cancel valve and spring into drum support, then tap retaining pins.

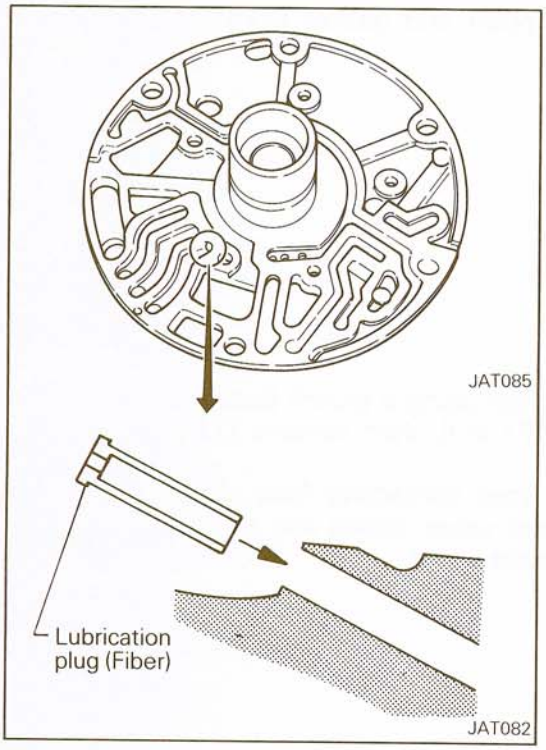

2. Install lubrication plug in drum support.

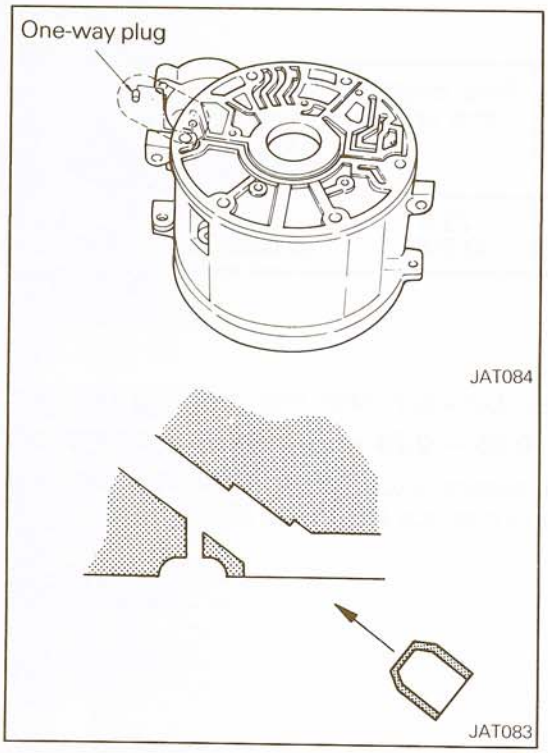

3. Install one-way plug in O.D. case.

STB Revision

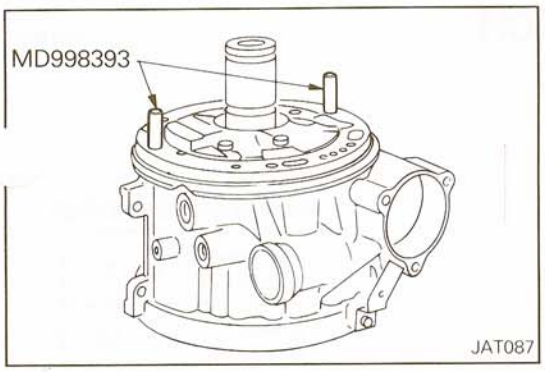

4. Install new O-ring and gasket on O.D. case.
5. Install drum support on O.D. case.
6. Insert the special tool into the bolt holes and perform the centering.
7. Tighten drum support securing bolts to specified torque.

Drum support to O.D. case: 7 – 9 Nm (5.1 – 6.5 ft.lbs.)

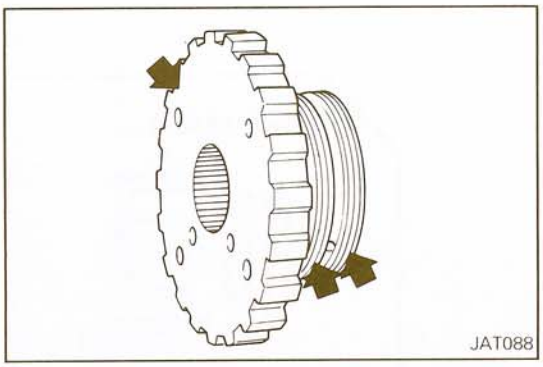

INSPECTION

1. Inspect contacting surface of oil distributor and ring groove areas for wear.

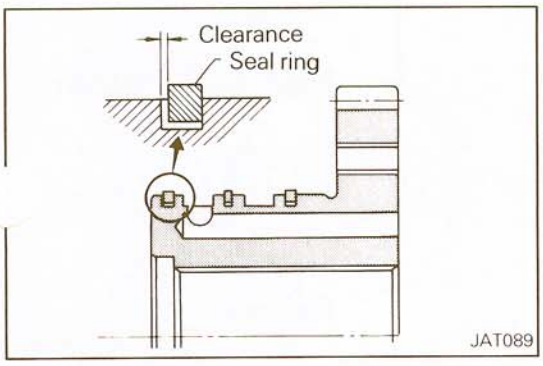

2. Measure clearance between seal ring and ring groove.

Standard clearance:
0.04 – 0.16 mm (0.0016 – 0.0063 in.)

Replace if the clearance exceeds 0.16 mm (0.0063 in.). Of course, it is good practice to replace all seal rings during an overhaul.

DIRECT CLUTCH AND HIGH-REVERSE CLUTCH

N21LHCA

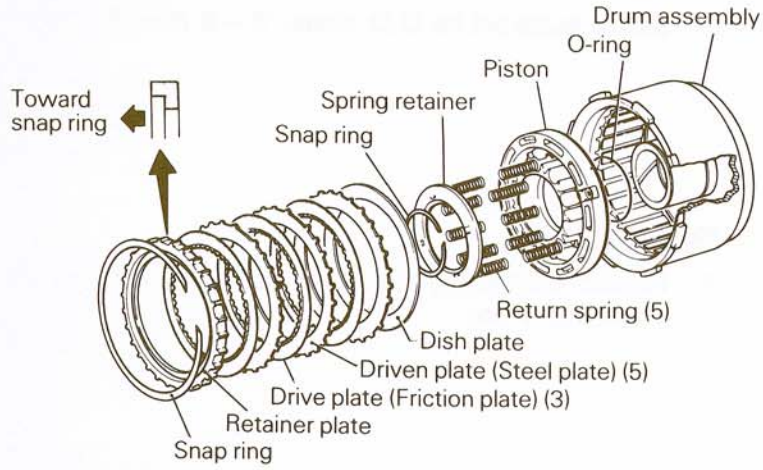

Number of return springs

High-reverse clutch	5
Direct clutch	10

Direct clutch

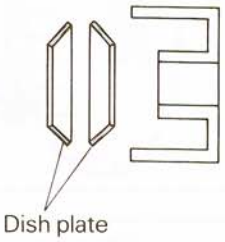

High-reverse clutch

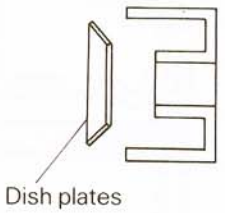

Layout of direct clutch plates

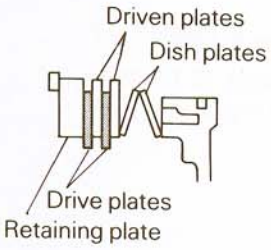

Layout of high-reverse clutch plates

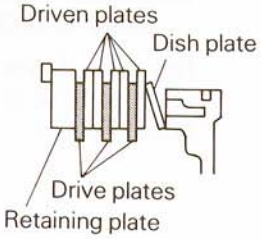

JAT090

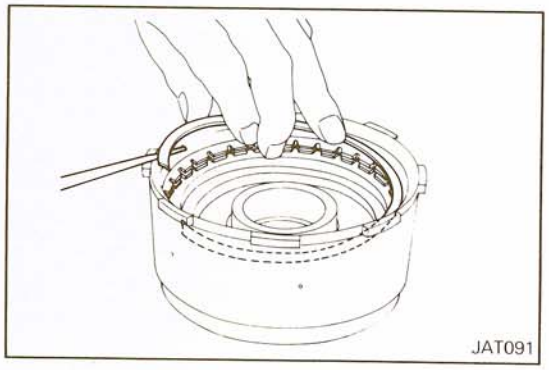

DISASSEMBLY

1. Using a screwdriver, remove large clutch retaining plate snap ring.
2. Remove clutch plate assembly.

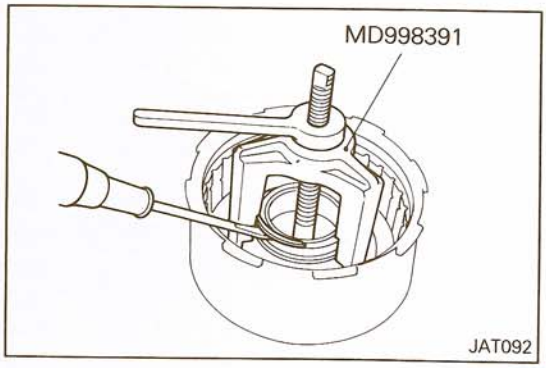

3. Compress clutch springs using the special tool and remove snap ring from spring retainer.

STB Revision

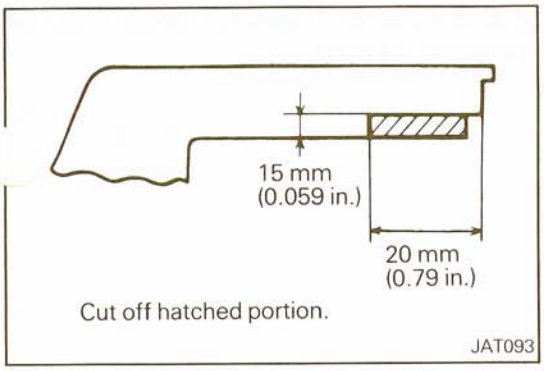

When tool is to be used, cut toe-tips of three legs with a grinding wheel.

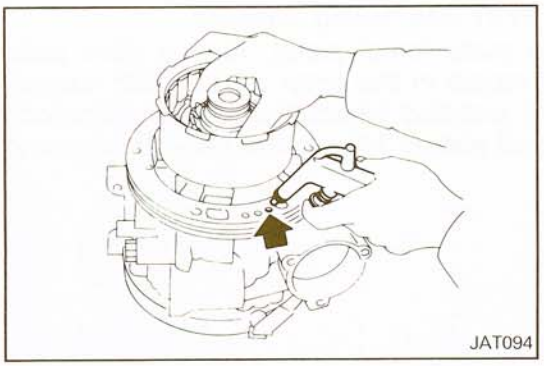

4. Remove spring retainer and springs.
5. For easy removal of piston from drum, mount clutch on drum support. Use an air gun with a tapered rubber tip to carefully apply air pressure to loosen piston from drum.
6. Check clutch drive plate facing for wear or damage. Drive plate thickness must not be less than limit.

Drive plate thickness
Standard value: 1.50 – 1.65 mm (0.0591 – 0.0650 in.)
Limit: 1.4 mm (0.055 in.)

7. Check for wear on snap ring, weak or broken coil springs, and warped spring retainer.
8. Check the operation of check ball in piston by applying air pressure.

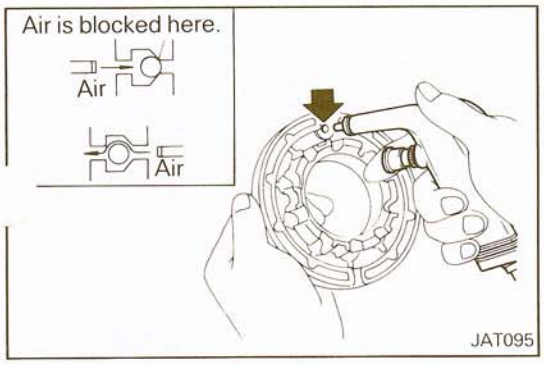

REASSEMBLY

1. Lubricate clutch drum hub and seals, and install inner seal and piston seal as illustrated. Be careful not to stretch seals during installation.
   Never assemble clutch dry; always lubricate its components thoroughly.

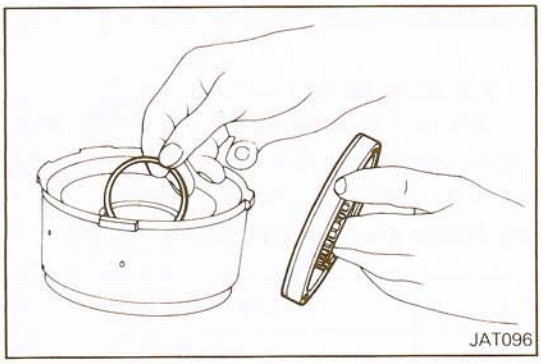

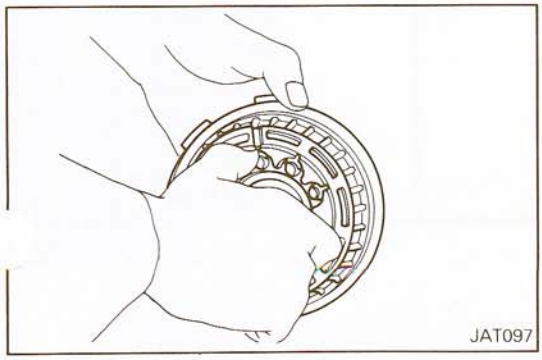

2. Assemble piston, being careful not to allow seal to kink or become damaged during installation. After installing, turn piston by hand to ensure that there is no binding.

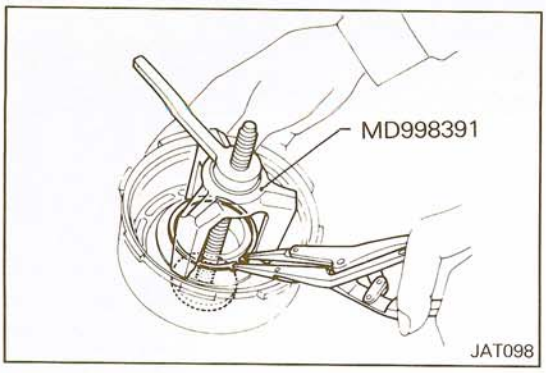

3. Reassemble spring and retainer. Reinstall snap ring. Be sure snap ring is properly seated.

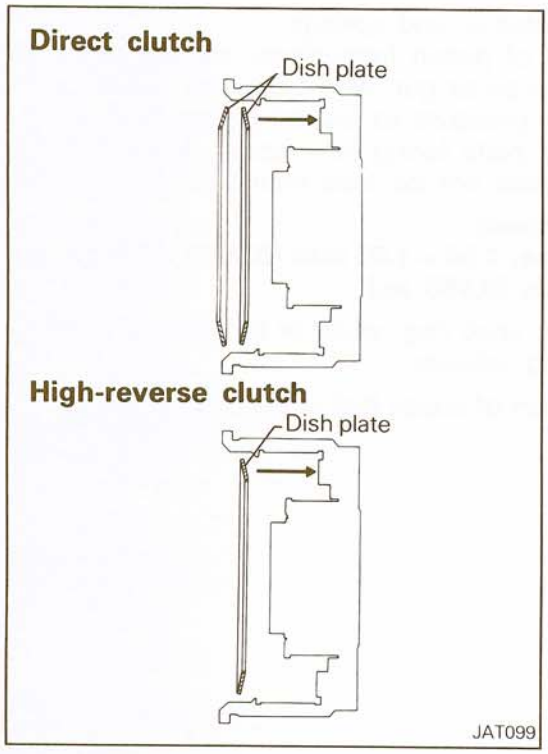

4. Install dish plate with dish facing outward.
5. Now install driven plate (steel plate), then a drive plate (friction plate) and repeat in this order until correct number of plates has been installed (check Service Specifications for proper quantity of plates). Now install retainer plate and snap ring.

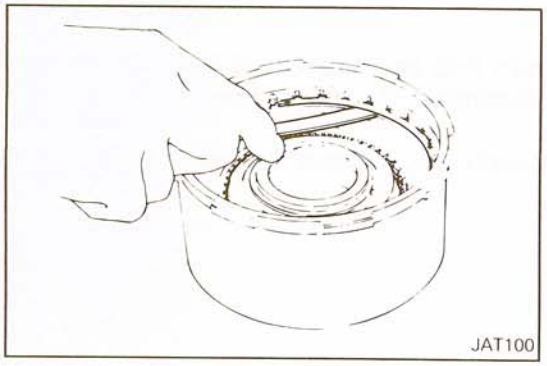

6. Measure clearance between retainer plate and snap ring.

Standard value:

Direct 1.6 – 1.8 mm (0.063 – 0.071 in.)
High-reverse 1.6 – 2.0 mm (0.063 – 0.079 in.)

If necessary, try other retaining plates having different thicknesses until correct clearance is obtained.

Available Retaining Plate for High-Reverse Clutch

Thickness mm (in.)	Part number
5.0 (0.197)	MD610366
5.2 (0.205)	MD610367
5.4 (0.213)	MD610368
5.6 (0.220)	MD610369
5.8 (0.228)	MD610370
6.0 (0.236)	MD610371
6.2 (0.244)	MD610372

STB Revision

Available Retaining Plate for Direct Clutch

Thickness mm (in.)	Part number
5.6 (0.220)	MD610252
5.8 (0.228)	MD610253
6.0 (0.236)	MD610254
6.2 (0.244)	MD610255
6.4 (0.252)	MD610256
6.6 (0.260)	MD610257
6.8 (0.268)	MD610258
7.0 (0.276)	MD610259

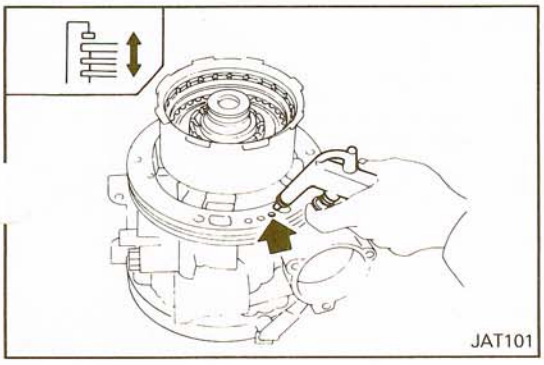

7. Testing high-reverse clutch (Front)
   With high-reverse clutch (Front) assembled on oil pump cover, direct a jet of air into hole in clutch drum for definite clutch operation.

FORWARD CLUTCH

N21LHDA

In regard to the number of clutch plates (drive plate and driven plate), refer to specifications.

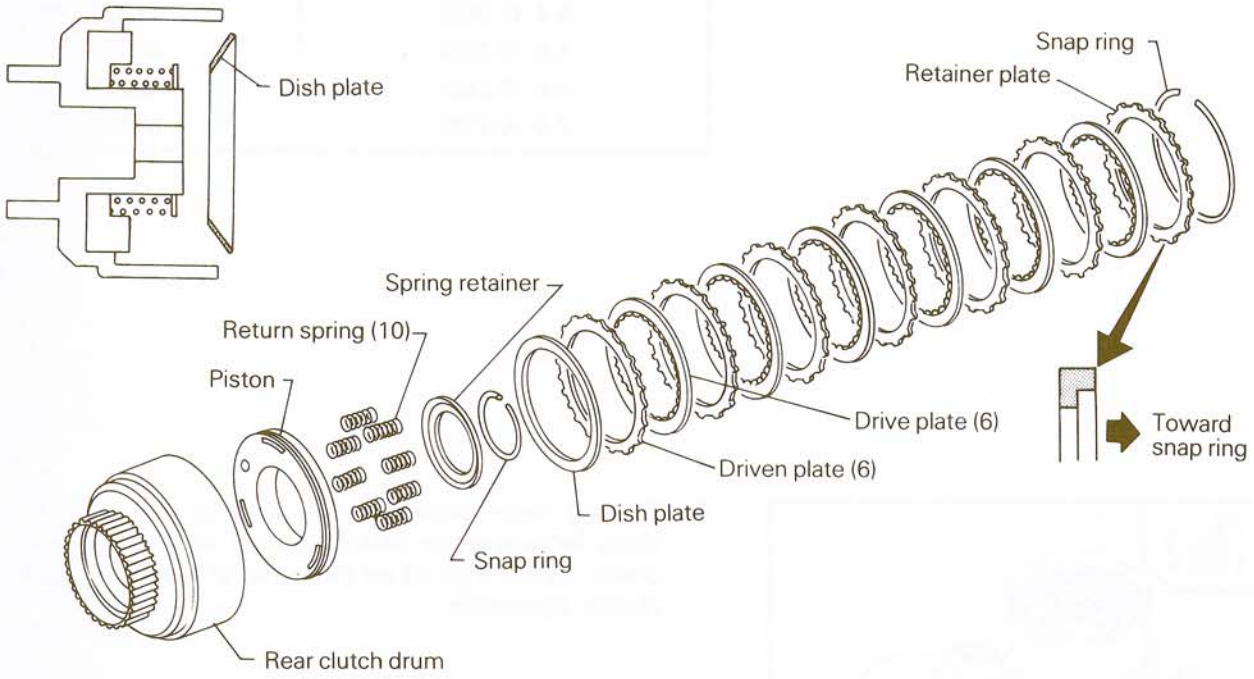

JAT102

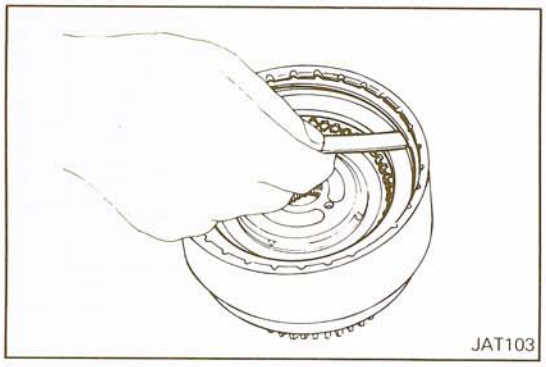

JAT103

REASSEMBLY

1. Service procedures for forward clutch (Rear) are essentially the same as those for high-reverse clutch (Front), with the following exception:

   Standard value: 0.8 – 1.5 mm (0.031 – 0.059 in.)

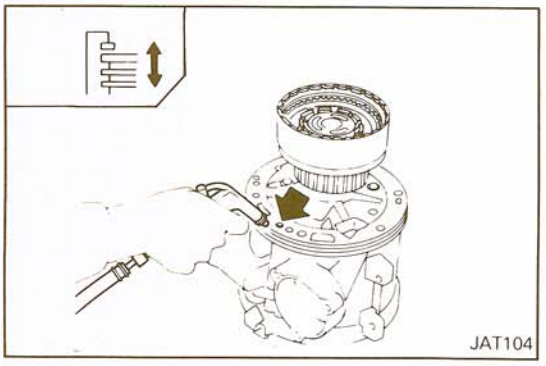

JAT104

2. Test rear clutch operation.

STB Revision

LOW-REVERSE BRAKE

N21LJ- -

In regard to the number of clutch plates (drive plate and driven plate), refer to specifications.

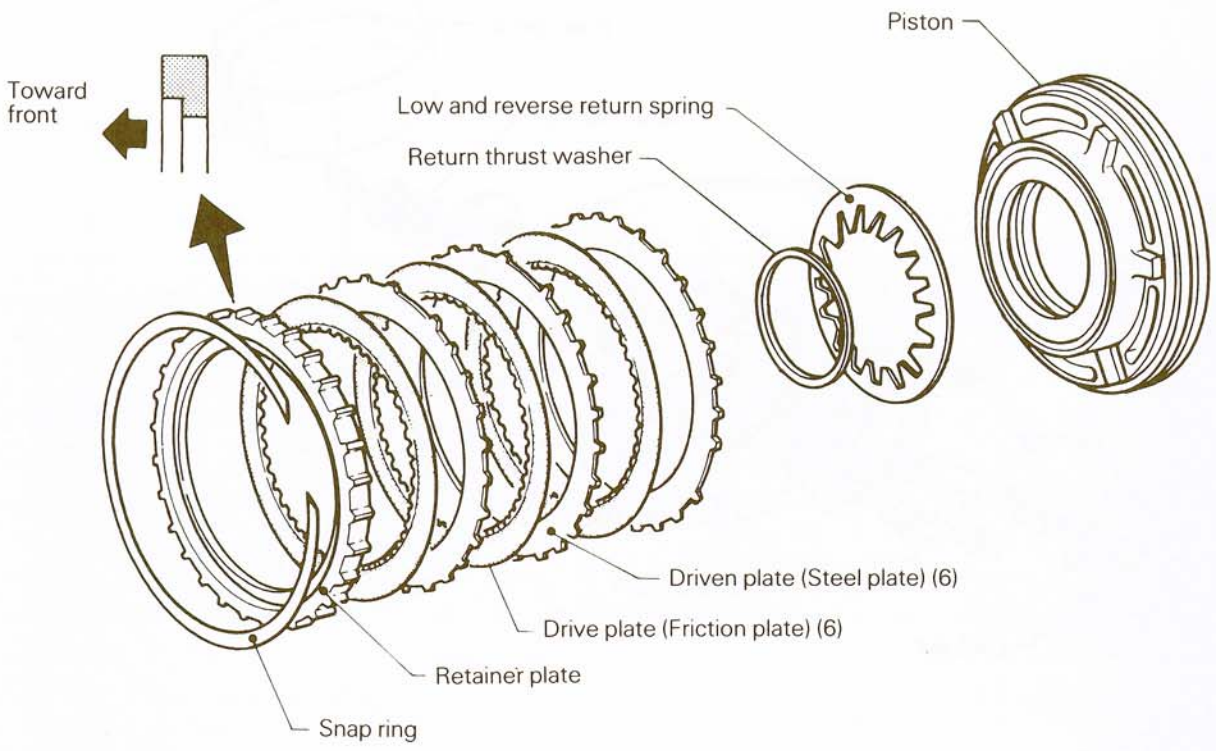

JAT105

INSPECTION

1. Examine low and reverse brake for damaged clutch drive plate facing and worn snap ring.
2. Check drive plate facing for wear or damage; if necessary, replace.

Drive plate thickness
Standard value: 1.90 – 2.05 mm (0.0748 – 0.0807 in.)
Limit: 1.8 mm (0.071 in.)

BRAKE BAND AND BAND SERVO

N21LV- -

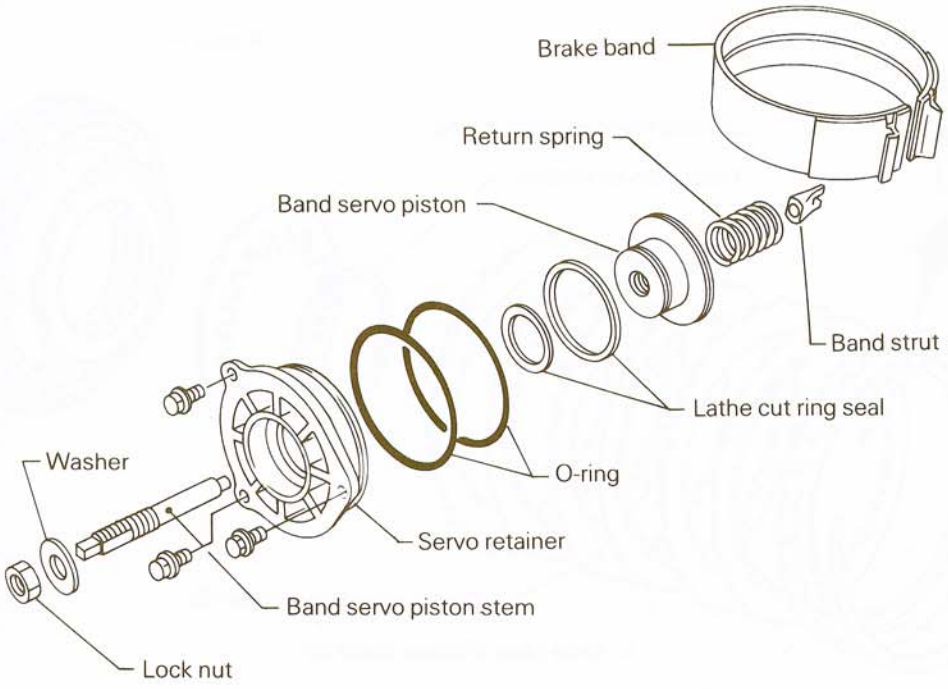

JAT106

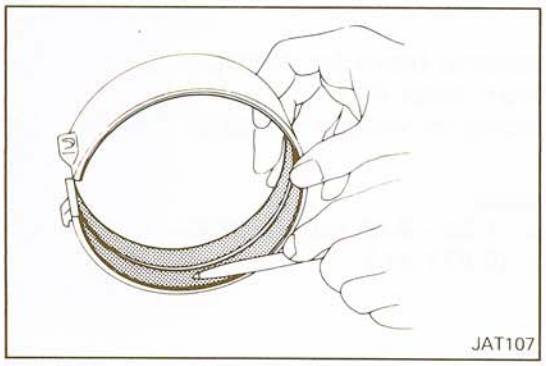

JAT107

INSPECTION

1. Inspect band friction material for wear. If cracked, chipped or burnt spots are apparent, replace the band.

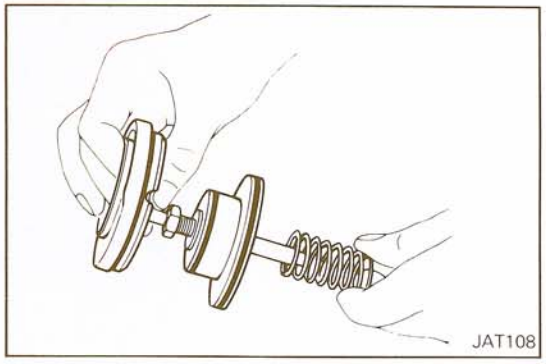

JAT108

2. Check band servo components for wear and scoring. Replace piston O-rings and all other components as necessary.

STB Revision

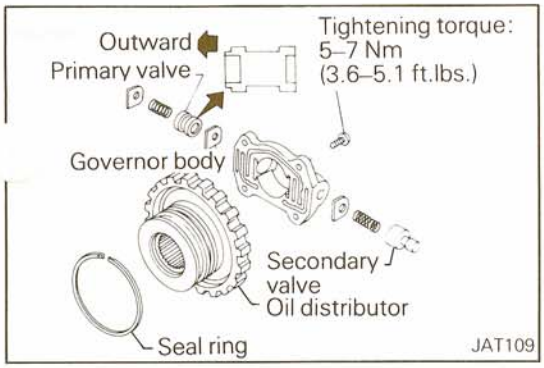

GOVERNOR

N21LM- -

DISASSEMBLY

1. Remove governor body from oil distributor.
2. Disassemble governor and check valves for indication of burns or scratches. Inspect springs for weakness or distortion. Replace parts as necessary and reassemble. Do not interchange components of primary and secondary governor valves.

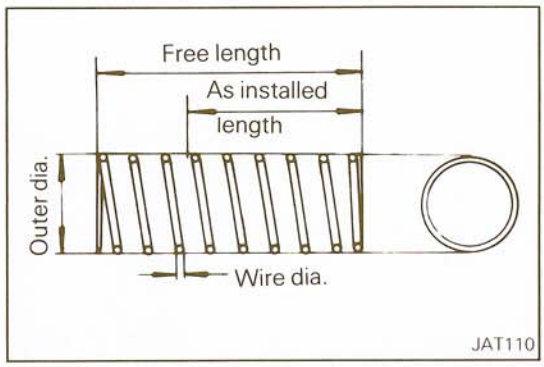

REASSEMBLY

Reassemble governor, noting the following.

1. For identification of primary and secondary governor valve springs, refer to the following chart.

Governor Spring Chart

	Wire dia. mm (in.)	Outer coil dia. mm (in.)	No. of active coil	Free length mm (in.)	Installed	
					Length mm (in.)	Load N (lbs.)
Primary governor	0.45 (0.0177)	8.75 (0.3445)	5.0	21.8 (0.858)	7.5 (0.295)	2.109 (0.474)
Secondary governor	0.70 (0.0276)	9.20 (0.3622)	5.5	19.9 (0.783)	10.5 (0.413)	6.86 (1.54)

ACCUMULATOR

N21LW- -

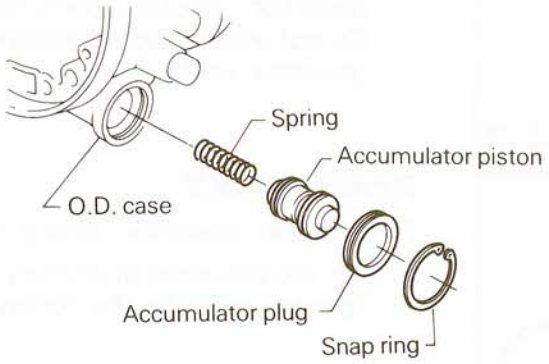

JAT111

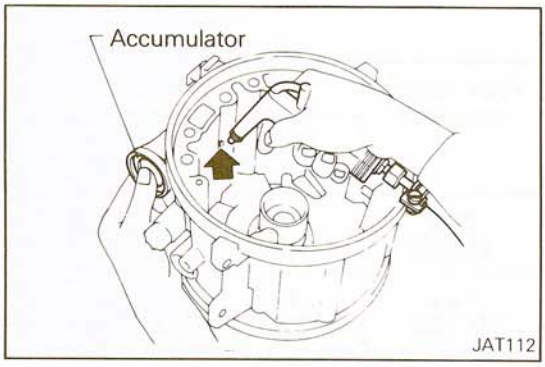

JAT112

DISASSEMBLY

Remove accumulator snap ring, then apply pressure to remove accumulator plug, piston, spring and spacer.

INSPECTION

Check accumulator components for wear and scoring. Repla. O-ring, seal rings and all other components as necessary.

Governor Spring Chart

	Wire dia. mm (in.)	Outer coil dia. mm (in.)	No. of active coil	Free length mm (in.)	Installed	
					Length mm (in.)	Load N (lbs.)
Primary governor	0.45 (0.0177)	8.75 (0.3445)	5.0	21.8 (0.858)	7.5 (0.295)	2.109 (0.474)
Secondary governor	0.70 (0.0276)	9.20 (0.3622)	5.5	19.9 (0.783)	10.5 (0.413)	6.86 (1.54)

STB Revision

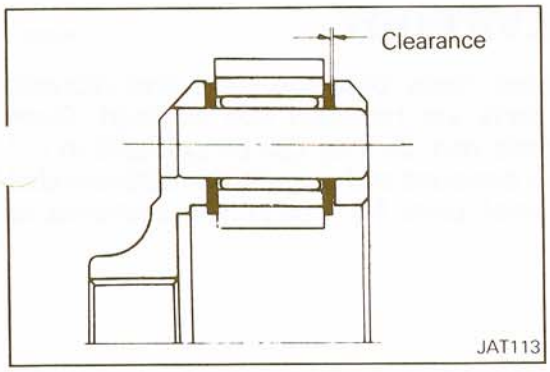

PLANETARY CARRIER

N21LX--

The planetary carrier cannot be divided into its individual components.
If any part of the component is faulty, replace the carrier as an unit.

1. Check clearance between pinion washer and planetary carrier with a feeler.

   Standard value: 0.20 – 0.70 mm (0.0079 – 0.0276 in.)

   Replace if the clearance exceeds 0.80 mm (0.0315 in.).
2. Check planetary gear sets for damaged or worn gears. Gear sets that have been damaged by overheating will have a blue discoloration.

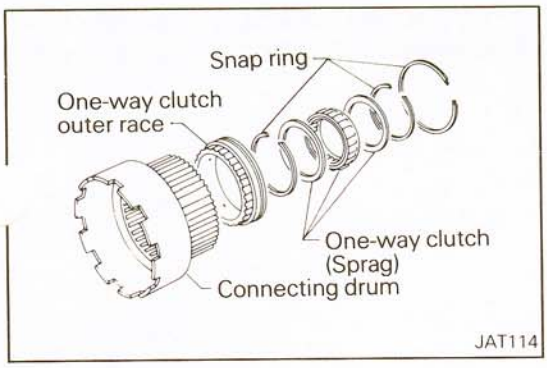

CONNECTING DRUM ASSEMBLY

N21LY--

If one-way clutch is out of order as determined during disassembly, repair it as follows:

1. Remove the snap rings inner and outer races.

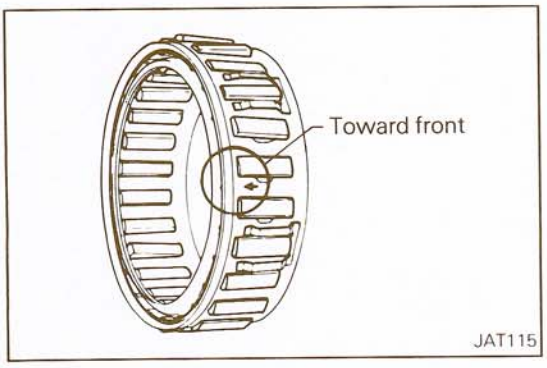

2. Inspect one-way sprag and contacting surface for wear or burns.
   Replace parts as necessary.
3. Assemble those parts.
   Install one-way clutch so that the arrow mark "→" is toward front of vehicle. It should be free to rotate only in clockwise direction.

CONTROL VALVE BODY

N21LO--

The valve body contains many precision parts and requires extreme care when parts are removed and serviced. Place removed parts on a parts rack so they can be put back in the valve body in the same positions and sequences. Care will also prevent springs and small parts from becoming scattered or lost.

DISASSEMBLY

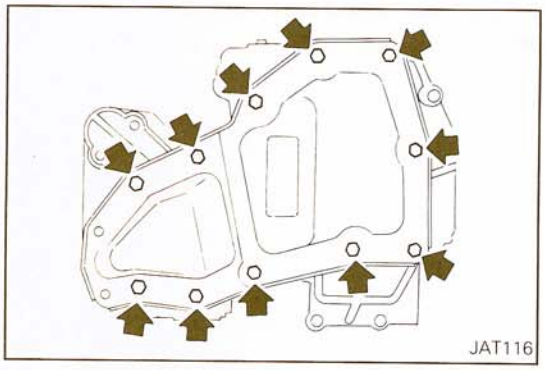
JAT116

1. Remove oil strainer and its attaching screws, nuts and bolts.

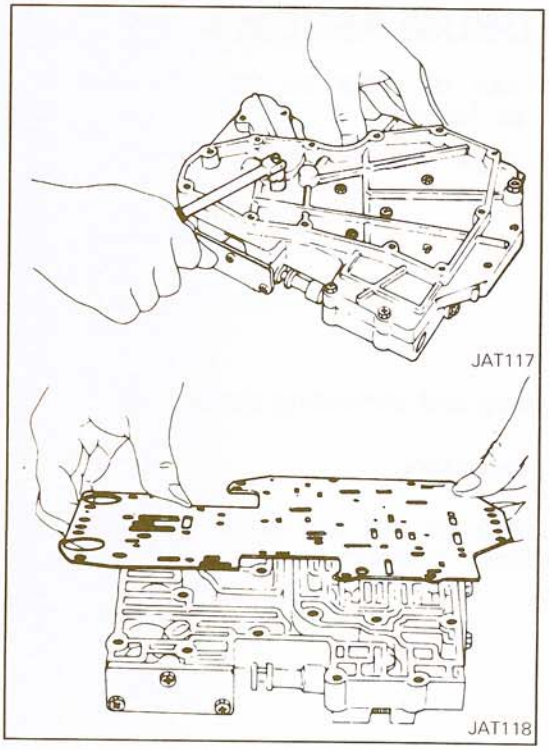
JAT117

JAT118

2. Disassemble valve body and its remaining attaching bolts and nuts to carefully separate lower body, separator plate and upper body.

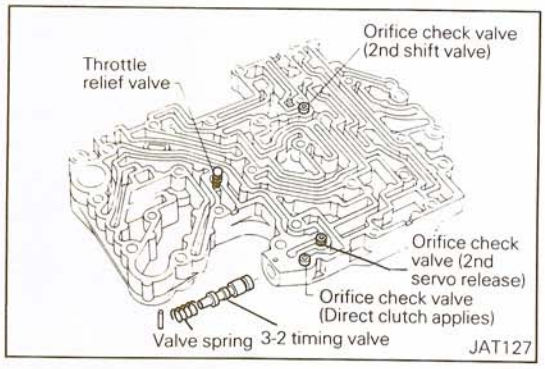

JAT127

3. During valve body separation, do not scatter or lose orifice check valve, servo orifice check valve, throttle relief check valve (ball) and related springs.

STB Revision

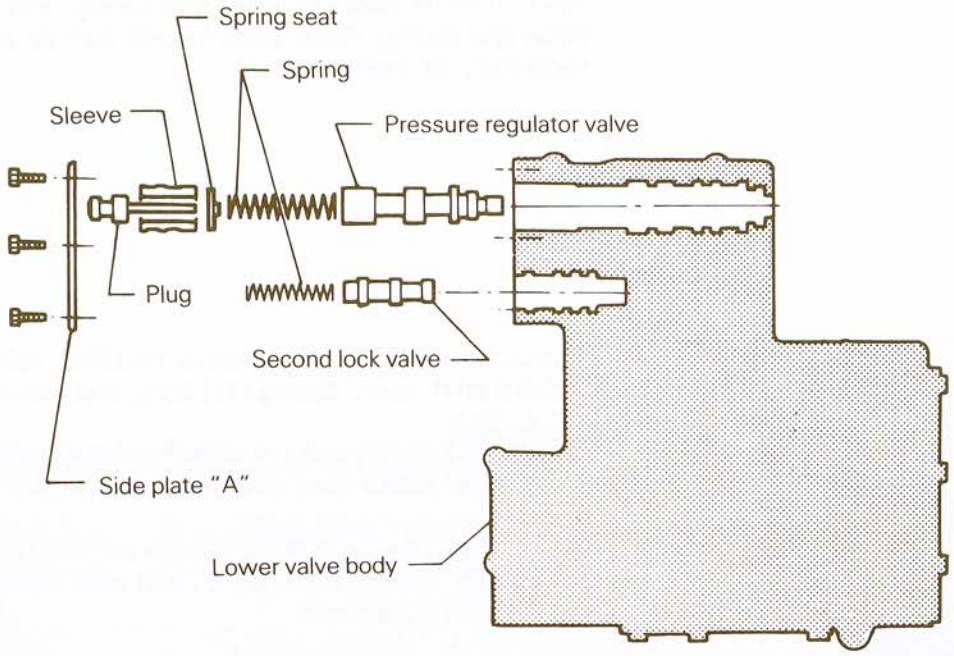

JAT119

4. Remove side plate A, pressure regulator valve, spring, spring seat, sleeve, plug, second lock valve and spring. Place each loose part on a rack to retain correct sequence of assembly.

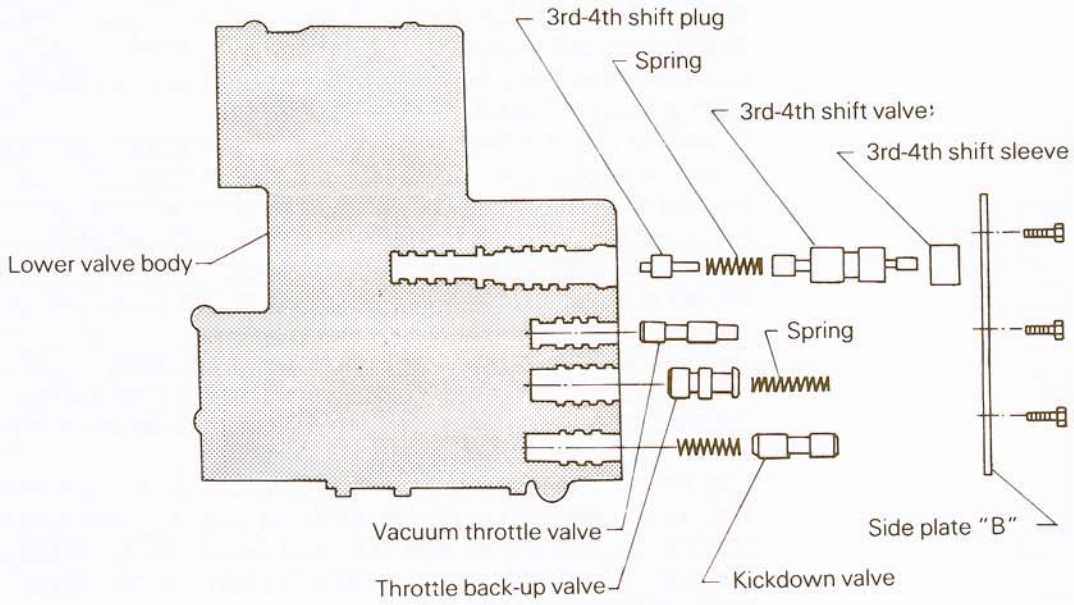

JAT120

5. Remove side plate B, 3rd-4th shift valve, vacuum throttle valve, throttle back-up valve and spring, and the kickdown valve and spring. Place each loosen part on a rack to retain sequence of assembly.

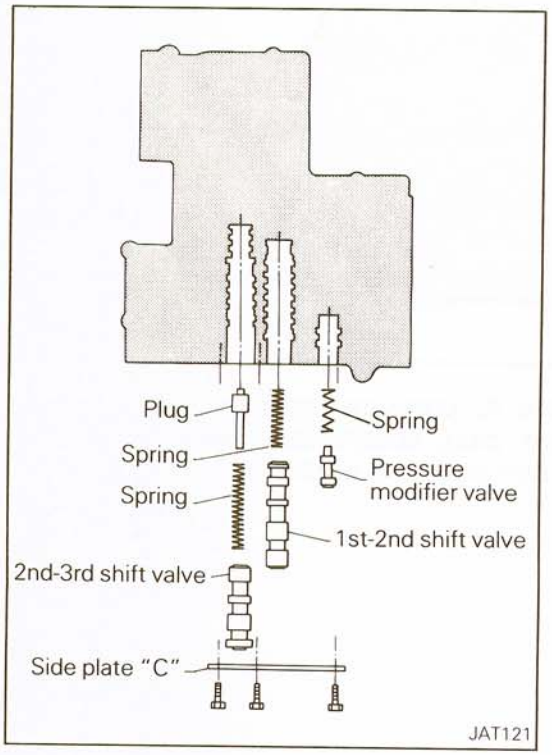

6. Remove side plate C, pressure modifier valve and spring 2nd-3rd shift valve, spring and plug, and 1st-2nd shift valve and spring.
   Remove 3-2 timing valve and spring from lower valve body.
7. Place each loose part on a rack to retain sequence of assembly.
   Manual valve was removed when valve body was removed from transmission. Include valve in subsequent inspection and service sequence.

INSPECTION

PRECAUTION FOR INSPECTION

A newly manufactured valve body represents precision manufactured valves assembled with close tolerances into precision bores of the valve body. If inspection reveals excessive clearances, 0.03 mm (0.0012 in.) or more, between the valves and the valve body bores, replace the entire valve body rather than attempt rework.

If one or more valves are sticking from varnish deposits or burns resulting from deteriorated oil or overheating, you may be able to clean the valves and valve bodies. Always use crocus cloth, which is a very fine type of cutting material.

Never use emery cloth, as it is too coarse and can scratch the valves or valve bores. Scratches can lead to future deposits of varnish or foreign matter.

During cleaning, do not remove the sharp edges of the valve. When edges are rounded or scratched, entry is provided for dirt or foreign matter to work into the sides of the valves and hinder valve movement.

The valves may be cleaned using alcohol or lacquer thinner. The valve bodies can be dip cleaned with a good carburetor cleaner or lacquer thinner. Do not leave valve bodies submerged in carburetor cleaner longer than five minutes. Rinse parts thoroughly and dry.

Lubricate all parts in clean automatic transmission fluid before reassembly.

STB Revision

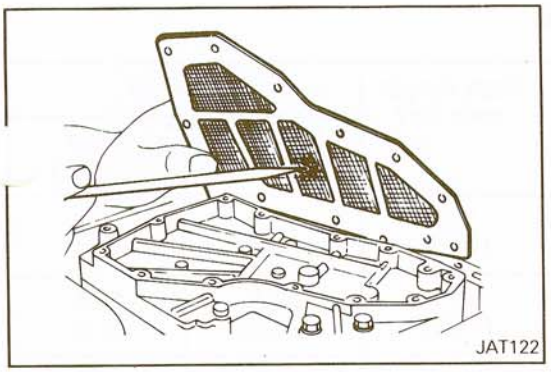
JAT122

1. Check valves for signs of burning. Replace if beyond chean-up.
2. Check oil strainer for general condition. Replace if necessary.

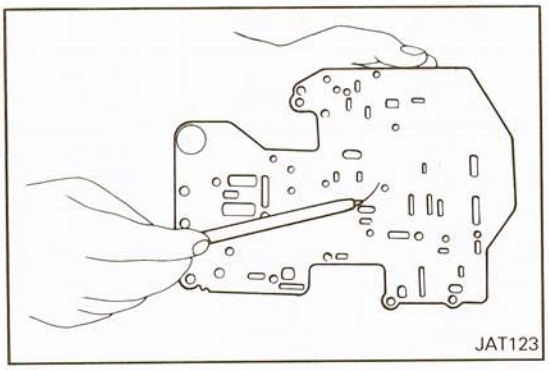
JAT123

3. Check separator plate for scratches or damage. Replace if necessary. Scratches or score marks can cause oil to bypass correct oil passages and result in system malfunction.
4. Check oil passages in upper and lower valve bodies for varnish deposits, scratches or other damage that would impair valve movement. Check threaded holes and related bolts and screws for stripped threads; replace as needed.
5. Test valve springs for weakened load condition. Refer to Valve Body Spring Chart for spring specifications.

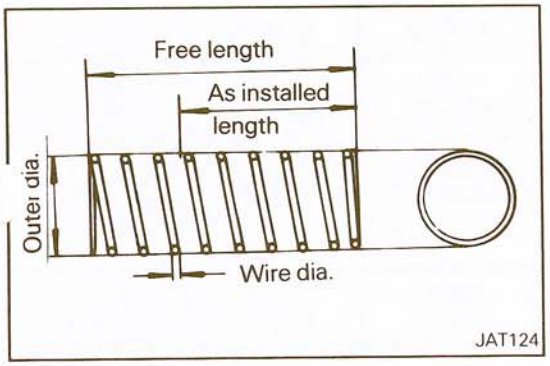

JAT124

REASSEMBLY

Valve Body Spring Chart

Valve spring	Wire dia. mm (in.)	Outer coil dia. mm (in.)	No. of active coil	Free length mm (in.)	Installed	
					Length mm (in.)	Load N (lbs.)
Manual detent	1.3 (0.051)	7.3 (0.287)	15	32.4 (1.276)	26.5 (1.043)	53.9 (12.1)
Pressure regulator valve	1.2 (0.047)	11.7 (0.461)	13	43.0 (1.693)	23.5 (0.925)	27.5 (6.2)
Pressure modifier valve	0.6 (0.024)	8.6 (0.339)	5.5	19.6 (0.772)	9.0 (0.354)	10 (2.2)
1st-2nd shift valve	0.7 (0.028)	7 (0.276)	11.8	28.3 (1.114)	16.0 (0.630)	6.129 (1.378)
2nd-3rd shift valve	0.7 (0.028)	6.9 (0.272)	18	41.0 (1.614)	17.0 (0.669)	13.73 (3.09)
Throttle back-up valve	0.8 (0.031)	7.3 (0.287)	13.5	31.8 (1.252)	18.8 (0.740)	14.31 (3.21)
Solenoid downshift valve	0.55 (0.0217)	5.55 (0.2185)	12	22.0 (0.866)	12.5 (0.492)	5.88 (1.32)
Second lock valve	0.55 (0.0217)	5.55 (0.2185)	16	33.5 (1.319)	21.0 (0.827)	5.88 (1.32)
Throttle relief check valve	1.0 (0.039)	6.5 (0.256)	13	25 (0.984)	19.0 (0.748)	27.93 (6.27)
Orifice check valve	0.23 (0.0091)	5.0 (0.197)	12	15.5 (0.610)	11.5 (0.453)	0.10 (0.02)
Servo orifice check valve						
3rd-4th shift valve	0.8 (0.0315)	6.6 (0.260)	12.6	30.3 (1.193)	13.1 (0.516)	24.57 (5.515)

STB Revision

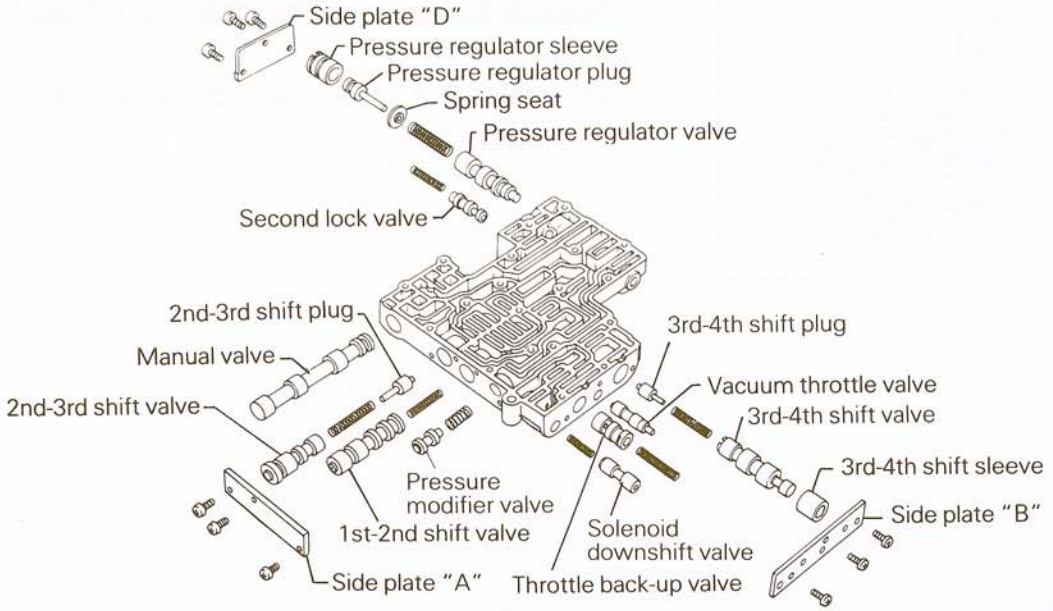

1. Assemble side plate A group of parts into lower valve body. Reinstall side plate and finger tighten screws. Assemble side plate B group and side plate C group in same manner as A group.

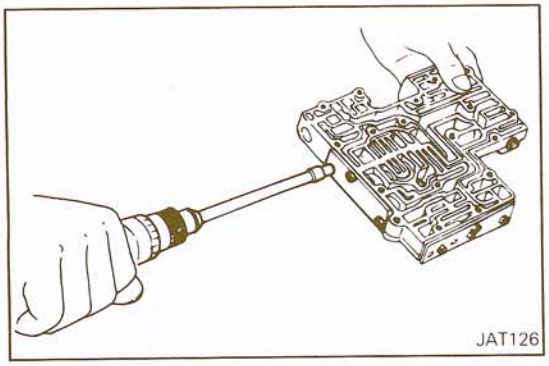

2. Tighten screws.
   Side plate to valve body: 2.5 – 3.4 Nm (1.8 – 2.5 ft.lbs.)

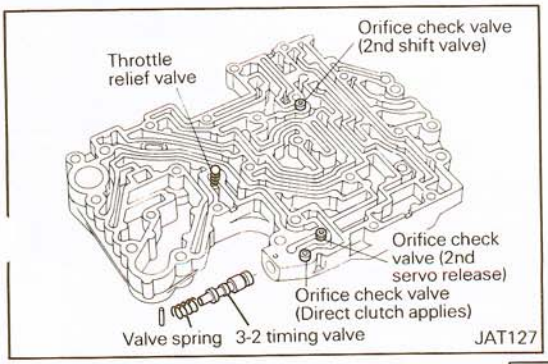

3. Install orifice check valves, valve springs, throttle relief valve spring and steel ball in valve body.
4. Install 3-2 timing valve and spring.

STB Revision

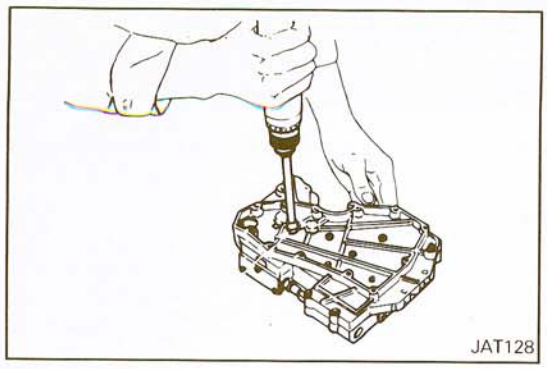

5. Install upper and lower valves.

   Upper and lower valves: 2.5 – 3.4 Nm (1.8 – 2.5 ft.lbs.)
   Reamer bolt: 5 – 7 Nm (3.6 – 5.1 ft.lbs.)

6. Install oil strainer.

   Oil strainer to valve body: 3 – 4 Nm (2.1 – 2.8 ft.lbs.,

   The manual valve is inserted into the valve body when the latter is installed in the transmission.

WHEELS AND TIRES

CONTENTS

GENERAL INFORMATION 2

SERVICE ADJUSTMENT PROCEDURES 4

- Checking of Tire Inflation Pressure 4
- Tire Wear 4
- Wheel Runout 4

SPECIFICATIONS 2

- General Specifications 2
- Service Specifications 2
- Torque Specification 2

TROUBLESHOOTING 3

- Bald Spots 3
- Cracked Treads 3
- Feathered Edge 3
- Rapid Wear at Center 3
- Rapid Wear at Shoulders 3
- Scalloped Wear 3
- Wear on One Side 3

WHEEL AND TIRE 5

GENERAL INFORMATION

N22BAAE

All vehicles are equipped with aluminum type wheels, and spare wheels are high pressure type. On vehicles with an intercooler, front and rear tire sizes are different.

SPECIFICATIONS

N22CA- -

GENERAL SPECIFICATIONS

Items	Vehicles without an intercooler	Vehicles with an intercooler	
Wheel (except spare wheel)		Front	Rear
Tire size	215/60R15-90H	205/55VR16	225/50VR16
Wheel type	Aluminum type	Aluminum type	Aluminum type
Wheel size	6.5JJ-15	7J-16	8J-16
Amount of wheel offset mm (in.)	18 (0.7)	18 (0.7)	–10 (–0.4)
Compact spare wheel			
Tire size	T135/90D15	T135/90D15	
Wheel type	Steel	Steel	
Wheel size	4-T x 15	4-T x 15	
Amount of wheel offset mm (in.)	40 (1.57)	40 (1.57)	
Tire inflation pressure kPa (psi)			
Four original tires	190 (27)	190 (27)	
Compact spare tire	420 (60)	420 (60)	

SERVICE SPECIFICATIONS

N22CB- -

mm (in.)

Items	Specifications
Limit	
Wheel runout	
Radial	3.0 (0.12)
Lateral	3.0 (0.12)
Tread depth of tire	1.6 (0.06)

TORQUE SPECIFICATION

N22CC- -

Items	Nm	ft.lbs.
Wheel nuts	90 – 110	65 – 80

STB Revision

TROUBLESHOOTING

N22EA--

Symptom	Probable cause	Remedy	Reference page
RAPID WEAR AT SHOULDERS 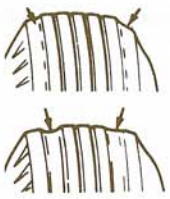	UNDER-INFLATION OR LACK OF ROTATION 	Adjust the tire pressure	–
RAPID WEAR AT CENTER 	OVER-INFLATION OR LACK OF ROTATION 		
CRACKED TREADS 	UNDER-INFLATION		
WEAR ON ONE SIDE 	EXCESSIVE CAMBER 	Inspect the camber	2-6
FEATHERED EDGE 	INCORRECT TOE 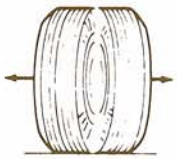	Adjust the toe-in	2-7
BALD SPOTS 	UNBALCANCED WHEEL 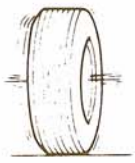	Adjust the imbalanced wheels	–
SCALLOPED WEAR 	LACK OF ROTATION OF TIRES OR WORN OR OUT-OF-ALIGNMENT SUSPENSION.	Rotate the tires. Inspect the front suspension alignment	22-5 2-6

11U0047

SERVICE ADJUSTMENT PROCEDURES

N22FDAB

CHECKING OF TIRE INFLATION PRESSURE

1. Check the inflation pressure of the tires.
2. If it is not within the specified tire inflation pressure, make the necessary adjustment.

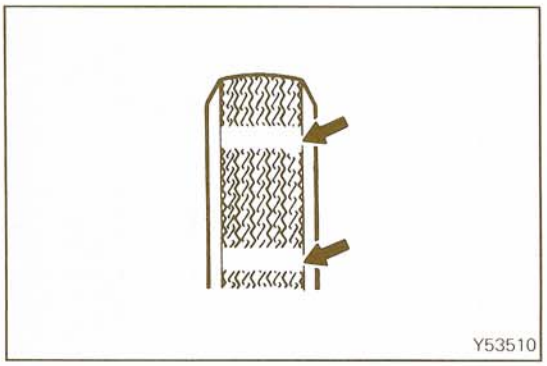
Y53510

TIRE WEAR

N22FBAA

1. Measure the tread depth of tires.
   Limit: 1.6 mm (0.06 in.)
2. If the remaining tread depth is less than the service limit, replace the tire.
   NOTE
   When the tread depth of tires is reduced to 1.6 mm (0.06 in.) or less, wear indicators will appear.

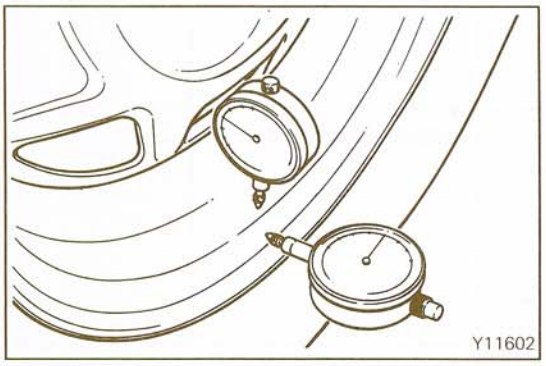
Y11602

WHEEL RUNOUT

N22FCAA

1. Jack up the vehicle so that the wheels are clear of the floor.
2. While slowly turning the wheel, measure wheel runout with a dial indicator.
3. If wheel runout exceeds the service limit, replace the wheel.

Limit:

Radial	**3.0 mm (0.12 in.)**
Lateral	**3.0 mm (0.12 in.)**

WHEEL AND TIRE

N22GA- -

REMOVAL AND INSTALLATION

Vehicles without an intercooler

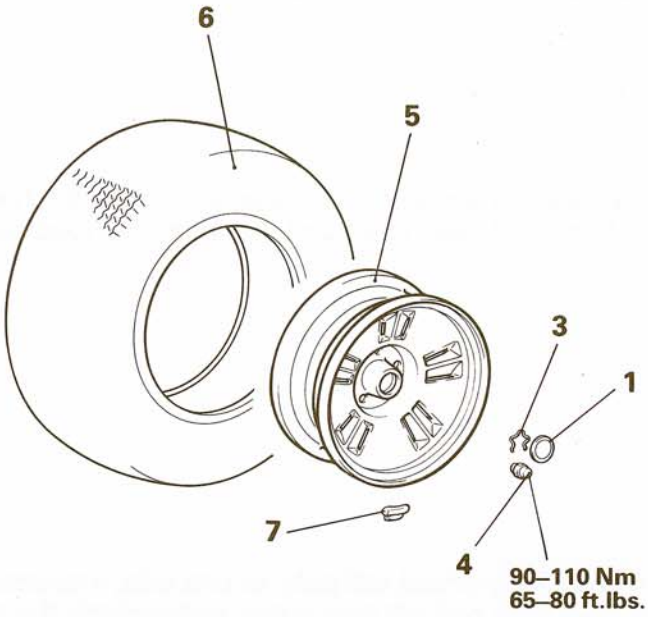

11Y667

Vehicles with an intercooler

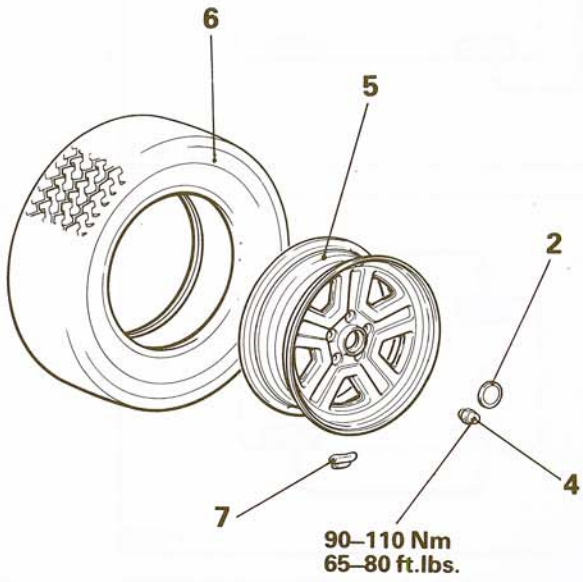

11Y665

Removal steps

1. Ornament
2. Center cap
3. Spring
4. Wheel nut
5. Disc wheel
6. Tire
7. Balance weight

NOTE
Reverse the removal procedures to reinstall.

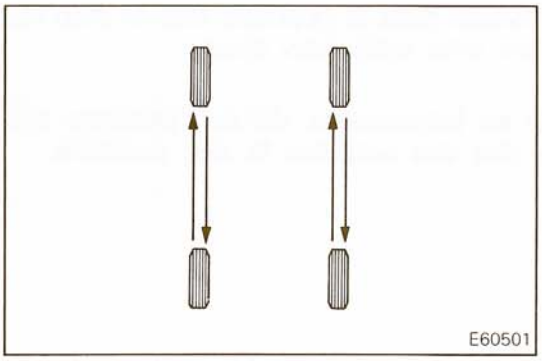

E60501

TIRE AND WHEEL ROTATION

N22GE- -

1. Rotate the tires in the pattern illustrated.

   Caution
   1. Do not use the compact spare wheel in tire rotation.
   2. Do not rotate the tires on vehicles with an intercooler because their front and rear wheels/tires are different in size from each other.

2. Finger-tighten wheel nuts then use a torque wrench to tighten the wheel nuts to specification.

   NOTE
   Do not use an impact wrench or apply oil to the wheel studs.

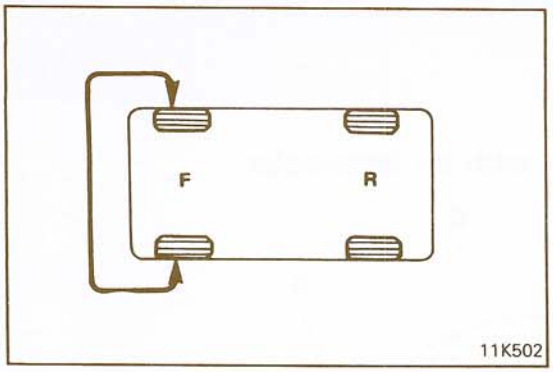

SIMPLE METHOD TO IMPROVE LOAD, PULL AND WANDER

1. If the steering wheel pulls to one side, perform the following tire rotation.
   (1) Interchange the front right and left tires, and road test in order to confirm vehicle stability.

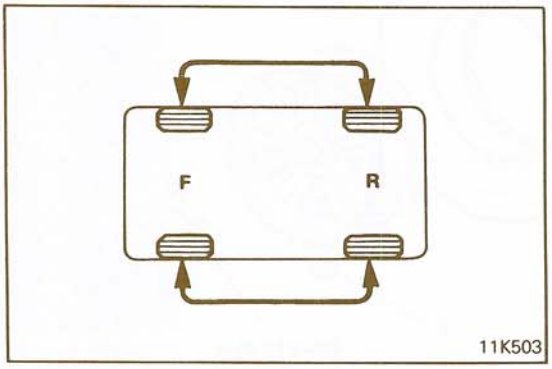

(2) If the steering wheel pulls to opposite side, interchange the front and rear tires, and perform the road test.

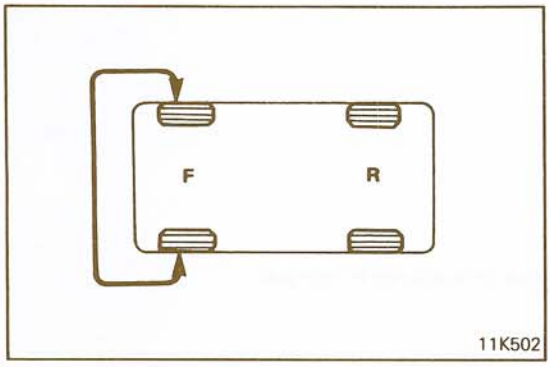

(3) If the steering wheel still pulls to one side, interchange the front right and left tires again, and perform the road test.

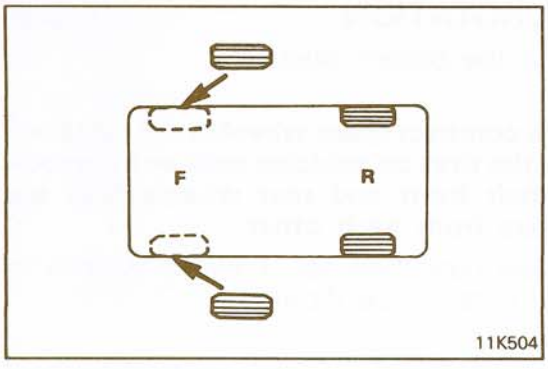

(4) If the steering wheel pulls to opposite side of step (3), replace the front tires with new ones.

Caution
On vehicles with an intercooler, do not perform the above test since the tire rotation is not possible.

INSTRUCTIONS FOR ALUMINUM TYPE WHEELS

N22GFAA

1. Aluminum is vulnerable to alkalies. If a vehicle washing detergent has been used, or salt from sea water or road chemicals has adhered, wash the vehicle as soon as possible. After washing the vehicle, apply body or wheel wax to the aluminum type wheels to prevent corrosion.
2. When cleaning the vehicle with steam, do not direct steam onto the aluminum type wheels.
   When tightening nuts for aluminum type wheels, particularly observe the following:
   (1) Clean the hub surface of aluminum type wheels.
   (2) After finger-tightening wheel nuts, tighten them to specifications.
   (3) Do not use an impact wrench or push the wrench by foot to tighten the wheel nuts.
   (4) Do not apply oil to the threaded portions.

TIRE CHAINS AND SNOW TIRES

N22GGAD

1. Use tire chains only on rear wheels. Do not use tire chains on front wheels.

   Caution
   Do not install the tire chains on vehicles with an intercooler.
   If installed, the chains will interfere with the fenders and give damages to them.

2. When using snow tires, use them on all four wheels for maneuverability and safety.

INSTRUCTIONS FOR COMPACT SPARE TIRE

N22GHAA

1. The compact spare tire is designed to save space in the luggage compartment, and its lighter weight makes it easier to use if a flat tire occurs.
2. The following instructions for the compact spare tire should be observed.
   (1) Check the inflation pressure after installing the spare tire, and adjust to the specified pressure.
   (2) Avoid driving through automatic car washes and over obstacles that could possibly damage the vehicle's undercarriage. Because the tire is smaller than the original tire, car ground clearance is slightly reduced.
   (3) The compact spare tire should not be mounted on any other type disc wheels, nor should standard tires, snow tires, wheel covers or trim rings be mounted on disc wheel for compact spare tire. If such use is attempted, damage to these items or other vehicle components may occur.

BODY

CONTENTS

AERO PARTS 73
BUMPER 31
DOOR ASSEMBLY 50
DOOR MIRROR 65
DOOR TRIM 52
FENDERS 36
FLOOR CONSOLE 84
FRONT DOOR GLASS AND REGULATOR 54
FRONT DOOR HANDLE AND LATCH 59
FRONT DOOR WEATHERSTRIP 63
FUEL FILLER DOOR 23
GRILLE AND MOULDING 39
HEADLINING 92
HOOD 21
INSTRUMENT PANEL 78
LOOSE PANEL 70
MARK, EMBLEM 71
QUARTER WINDOW 48
REAR HATCH 25
SEAT BELTS 97
SEATS 94
SERVICE ADJUSTMENT PROCEDURES 18
- Door Fit Adjustment 18
- Door Glass Adjustment 19
- Floor Pan Inspection 20
- Hood Fit Adjustment 18
- Inside Handle Play Adjustment 19
- Outside Handle Adjustment 20
- Rear Hatch Fit Adjustment 18

SPECIFICATIONS 2
- General Specifications 2
- Lubricant 4
- Sealant and Adhesives 4
- Service Specification 3
- Torque specifications 3

SUNROOF 67
TRIMS 86
TROUBLESHOOTING 5
- Automatic Seat Belt
- Central Door Locking
- Circuit Diagrams
- Power Windows
- Remote-controlled Mirror
- Sunroof Water leaks
  Wind noise
- Troubleshooting of Wind Noise

WINDSHIELD 43
WINDSHIELD AND QUARTER WINDOW 41

SPECIFICATIONS

N23CA- -

GENERAL SPECIFICATIONS

Items	Specifications
Hood	
Type	Rear hinged, front opening type
Front doors	
Construction	Front-hinged, sash construction
Regulator system	Single-arm type
Locking system	Pin-fork type
Rear hatch	
Type	Inner-hinged, with gas damper
Glass installation method	
Windshield glass	Adhesive type
Quarter window glass	Adhesive type
Rear hatch window glass	Adhesive type
Glass thickness mm (in.)	
Windshield glass	5.2 (0.20)
Quarter window glass	3.5 (0.14)
Rear hatch window glass	5 (0.2)
Door window glass	4 (0.16)
Power window motor assembly	
Type	Permanent magnet type (built-in circuit breaker)
Revolutions under load rpm	
At 1 Nm (0.72 ft.lbs.)	60 – 90
At 2 Nm (1.45 ft.lbs.)	50 – 80
Bound current A	34 or less
Direction of rotation	Clockwise and counterclockwise
Power window switch assembly	
Type	Automatic reset type
Door lock actuator	
Range of voltage used V	9 – 15
Locking current A	4 or less
Plunger pulling force kg (lbs.)	2 (4.4)
Plunger complete stroke mm (in.)	14 – 17 (0.55 – 0.67)
Remote control mirror motor	
Type	Ferrite magnet motor
Rated current mA	75
Remote control mirror switch	
Type	Contact type (left/right switching, ring contact type)
Rated load mA	
Regular up-down or right-let direction	75
Intermediate directions	150

Items	Specifications
Automatic seat belt motor	
Type	Ferrite magnet motor
No-load speed rpm	180
No-load current A	4 or less
Load current at 125 Ncm (11 in.lbs.) A	6.4 – 6.8
Load speed at 125 Ncm (11 in.lbs.) rpm	125 – 225
Lock test current A	38 or less

SERVICE SPECIFICATIONS

N23CB- -

mm (in.)

Items	Specifications
Standard value	
Hood hook bolt length	53 (2.1)
Play of inside handle	4 – 10 (0.16 – 0.39)
Play of outer handle	3 – 8 (0.12 – 0.3)

TORQUE SPECIFICATIONS

N23CC- -

Items	Nm	ft.lbs.
Hood hinge	9 – 14	6.5 – 10
Hood latch	7 – 11	5 – 8
Hood hook	4 – 6	2.9 – 4.3
Rear wiper arm locking nut	6 – 9	4 – 7
Windshield wiper arm locking nuts	10 – 16	7 – 12
Door hinge		
Body side	13 – 26	9 – 19
Door side	17 – 26	12 – 19
Door grip	1.5 or less	1.1 or less
Hatch hinge		
Hatch side	5 – 7	4 – 5
Body side	5 – 8	4 – 6
Hatch latch	4 – 6	2.9 – 4.3
Air spoiler (center) attaching nuts	3.5 – 5.0	2.5 – 3.6
Front seat mounting nuts	24 – 36	17 – 26
Front seat mounting bolts	35 – 55	25 – 40
Rear seat cushion mounting bolts	4 – 6	3 – 4
Rear seat hinge bracket mounting bolts	9 – 14	6 – 10
Rear seat striker	4 – 6	3 – 4
Front/rear seat belt anchor plate	35 – 55	25 – 40
Rail guide	4 – 6	2.9 – 4.3
Outer casing (B)	4 – 6	2.9 – 4.3
Rail guide bracket attaching bolts	8 – 12	5.8 – 8.7
Retractor		
For shoulder belt	17 – 26	12 – 19
For lap belt	35 – 55	25 – 40
Buckle	35 – 55	25 – 40
Shoulder belt sub anchor	35 – 55	25 – 40

STB Revision

LUBRICANTS

N23CD- -

Items	Specified lubricants	Quantity
Spring of the hood lock	Multipurpose grease SAE J310, NLGI No. 2	As required
Sliding portion of rear hatch link	Multipurpose grease SAE J310, NLGI No. 2	As required
Sliding portion of rear hatch hinge	Multipurpose grease SAE J310, NLGI No. 1	As required
Sliding portion of rear hatch latch	Multipurpose grease SAE J310, NLGI No. 2	As required
Sliding portion of front door hinge	Multipurpose grease SAE J310, NLGI No. 0	As required
Sliding portion of door glass guide	Multipurpose grease SAE J310, NLGI No. 2	As required

SEALANTS AND ADHESIVES

N23CE- -

Items	Specified sealant and adhesive	Quantity
Between tailgate glass and tailgate moulding	Urethane adhesive (Essex Urethane "E" ... Auto Glass Sealant)	As required
Tailgate glass to tailgate garnish contact surface	Urethane adhesive (Essex Urethane "E" ... Auto Glass Sealant)	As required
Urethane bumper repair adhesive	3M Structural Adhesive 8101	As required
Flange parts of the fender	3M ART Part No. 8531, 8646 or 3M Adhesive EC-2153, EC-5528	As required
Between windshield and body	Urethane adhesive (Essex Urethane "E" ... Auto Glass Sealant)	As required
Stud hole	3M ART Part No. 8513, 8509 or 3M Adhesive EC-5502, EC-5562	As required
Between windshield and moulding	3M Adhesive EC-870 or equivalent	As required
Between quarter window and body	Urethane adhesive (Essex Urethane "E" ... Auto Glass Sealant)	As required
Waterproof film	3M ART Part No. 8626 or 3M Adhesive EC-5310	As required
Door opening weatherstrip	3M ART Part No. 8626 or 3M Adhesive EC-5310	As required
Roof lid female hinge	3M ART Part No. 8659 or equivalent	As required
Air spoiler (center)	3M ART Part No. 8626 or 3M Adhesive EC-5310	As required

TROUBLESHOOTING

N23EAAF

Symptom	Probable cause	Remedy	Reference page
Sunroof Water leaks	Deteriorated roof lid weatherstrip	Replace	23-67
	Excessive roof lid-to-body clearance and improperly fitted weatherstrip	Adjust	–
Wind noise	Loose or deformed deflector	Retighten or replace	–
Door glass fails to operate up and down	Dismount window glass regulator	Adjust	–
	Detached sash	Attach	–
	Broken sash	Replace	–
	Collapsed sash	Repair or replace	–
	Collapsed window glass regulator arm	Repair or replace	–
	Broken window glass regulator	Replace	–
Door glass operates up and down hardly	Improper window glass position	Adjust	23-19
	Collapsed sash	Repair or replace	–
	Collapsed window regulator arm	Repair or replace	–
Wind noise from around door	Insufficient weatherstrip holding force	Adjust door installation	–
	Improper weatherstrip installation or deteriorated weatherstrip	Repair or replace	–
	Incomplete door closing	Adjust	23-19
	Improper door installation	Adjust	23-19
	Improper gap between door glass and weatherstrip	Adjust	–
	Deformed door	Repair or replace	–
Rear hatch is "heavy" when opened/closed; abnormal noise is heard from hinges	Insufficient grease on hinges	Apply chassis grease	23-25
Wind noise from around rear hatch	Insufficient weatherstrip holding force	Adjust rear hatch installation	–
	Improper weatherstrip installation or deteriorated weatherstrip	Repair or replace	23-25
	Uneven clearance between body and rear hatch	Adjust	–
	Deformed rear hatch	Repair or replace	–

TROUBLESHOOTING OF WIND NOISE

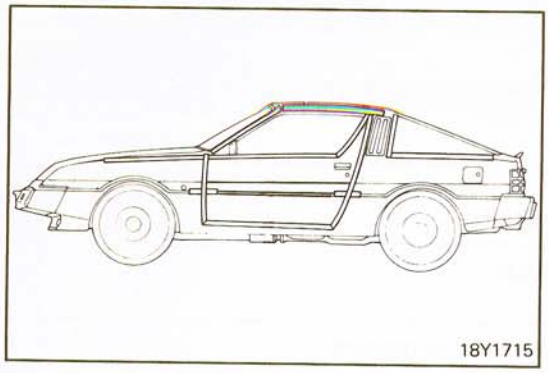

(1) Apply cloth tape to all potential sources of wind noise such as panel joints, protrusions, moulding joints, glass to body joints in the direction from which noises are heard.
(2) Drive under this condition to make sure that wind nois are eliminated.

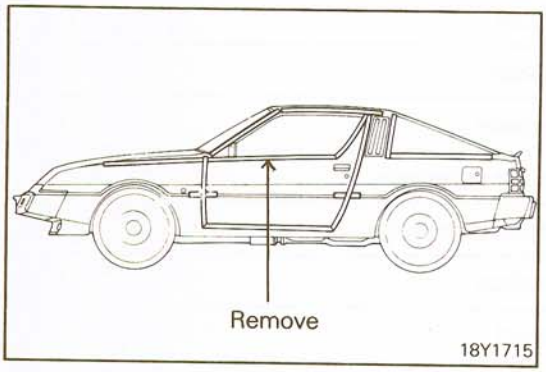

(3) Remove tape one after another until wind noises are produced again.

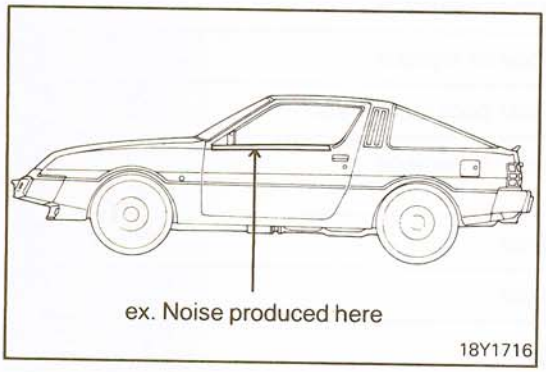

(4) If removal of a tape causes noise generation, apply tape again to that location and remove other tapes one after another to check that no noise is produced.
(5) The location with tape left applied to the last is responsible for wind noise.

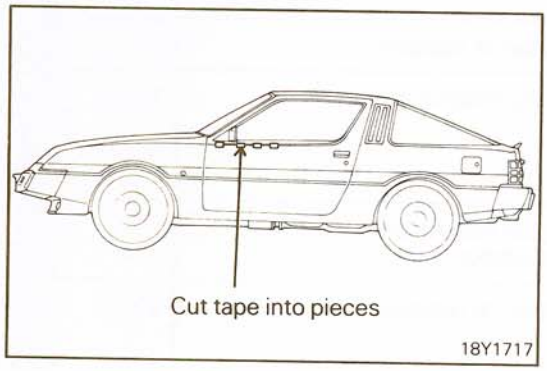

(6) Cut the left tape into smaller pieces and remove piece after piece in the same manner as before to localize suspected source.

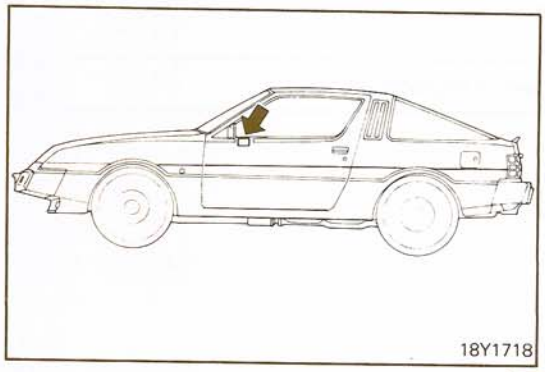

(7) Remove the last piece left and check that its removal causes wind noise and its application stops wind noise.
(8) Apply butyl tape or body sealer to the thus located area to minimize gap.

STB Revision

POWER WINDOWS

Inspection item / Symptom	Burnt-out fuse No. 12	Break in wiring harness	Poor grounding	Poor connector connection	Malfunctioning power window relay	Malfunctioning main switch	Malfunctioning main switch lock	Malfunctioning sub switch	Malfunctioning power window motor	Improper adjustment of regulator and glass
None of the door windows can be operated.	①	④	②	③	⑤	⑥				
The door windows cannot be operated by using the main switches.				③		①			②	
The door windows can be operated by using the main switches, but cannot be operated by using the sub switches.				①	③			②		
The door windows can be operated (by using the sub switches) even though the lock switch is at "ON"							①			
The door windows do not operate smoothly										①
Power windows don't operate with ignition key at the ON position.	Refer to GROUP 8 ELECTRICAL – ETACS.									
Operation of the power window is possible immediately after the ignition key is turned to OFF, but the power window operation does not stop when, within 30 seconds, the front door is opened.	Refer to GROUP 8 ELECTRICAL – ETACS.									
The power windows can be operated even though the timer operation time (about 30 seconds) after the ignition key is turned to OFF has passed.	Refer to GROUP 8 ELECTRICAL – ETACS.									

NOTE
Numbers in circle indicate inspection sequence.

CENTRAL DOOR LOCKING

Symptom \ Inspection item	Burnt-out fuse No. 8	Break in wiring harness	Poor grounding	Poor connector connection	Malfunctioning door lock control relay	Malfunctioning door lock power relay	Malfunctioning of door lock actuator	Improper adjustment of door latch
Neither L.H. side nor R.H. side can be operated.	①	④	②	③	⑤	⑥	⑦	
Only either L.H. side or R.H. side can be operated.		②					①	
A door is not smoothly locked or unlocked.								①
Central door locking system doesn't function when front door lock knob is pressed down or pulled up.	Refer to GROUP 8 ELECTRICAL – ETACS.							

NOTE
Numbers in circle indicate inspection sequence.

REMOTE-CONTROLLED MIRROR

Symptom \ Inspection item	Fuse No.	Remote-controlled mirror switch	Remote-controlled mirror	Wiring harness and connector connection	Ground
Neither left nor right mirror operate correctly.	①	②		③	④
One of the mirrors (either left or right) does not operate correctly.		①	②	③	④
Rear window defogger and/or, heated mirror inoperative. [Indicator light lights]	Refer to GROUP 8 ELECTRICAL – ETACS.				
Rear window defogger and/or, heated mirror inoperative. [Indicator light does not light]	Refer to GROUP 8 ELECTRICAL – ETACS.				
Defogger keeps operating when the ignition switch is ON. [Indicator light is not turned off even if the switch is operated]	Refer to GROUP 8 ELECTRICAL – ETACS.				
Buzzer does not sound when the defogger switch is operated.	Refer to GROUP 8 ELECTRICAL – ETACS.				

NOTE
Numbers in circle indicate inspection sequence.

AUTOMATIC SEAT BELT

Symptom	Probable cause	Remedy	Reference page
Seat belt cannot be worn or released	Blown fuse	Replace fuse	–
	Undercharged battery	Charge battery or check charging system	–
	Connector in poor contact	Check connector for continuity	–
	Broken wire harness	Check wire harness	–
	Foreign matter caught in slide rail	Remove foreign matter	–
	Foreign matter in tape guide	Remove foreign matter	–
	Tape guide locally deformed	Correct deformation	–
	Limit switch in rail assembly not connected properly	Check limit switch for connection	–
	Circuit breaker blows	Correct circuit breaker resetting or short-circuiting	23-10 23-110
	Faulty motor	Disassemble motor and repair or replace	–
Seat belt stops on the way	Faulty motor assembly	Disassemble motor and repair or replace	–
	Faulty belt controller (drive circuit)	Adjust controller	–
	Locked shoulder belt making it rather too tight	Unlock belt and adjust belt tension	–
	Foreign matter caught in slide rail	Remove foreign matter	–
	Tape guide locally deformed	Correct deformation	–
	Connector in poor contact	Check connector for continuity	–
	Wire harness is nearly broken	Check wire harness	–
	Circuit breaker blows	Correct circuit breaker resetting or short-circuiting	23-10 23-110
Shoulder belt locks	Foreign matter in tape drive guide or rail	Check tape drive guide and rail for foreign matter and remove if any	–
	Tape drive guide or rail locally deformed	Repair or correct tape drive guide or rail deformation	–
	Tape drive is off from motor assembly or fractured	Check motor assembly and tape drive for operation with spool release lever pulled up to keep belt in free state	23-112
Relay operates abnormally at belt controller	Limit switch connector of guide rail assembly improperly wired	Check wiring around limit switch for connection and continuity	23-112
	Controller connector improperly connected	Adjust controller connector	–
	Wiring harness improperly connected	Check wiring harness for continuity	–

Symptom	Probable cause	Remedy	Reference page
Relay operates abnormally at belt controller	Faulty controller	Replace controller	23-110
	Motor connector terminals connected in reverse	Reconnect terminals normally	–
	Limit switch in guide rail assembly connected in reverse	Reconnect limit switch properly	–
	Tape drive is off from motor assembly or fractured	Check motor assembly and tape drive for operation and adjust with spool release lever raised to keep belt in free state. Replace motor assembly or tape drive if required.	23-112 23-61
Warning light or buzzer operates improperly	Door switch, limit switch and spool release switch installed improperly	Check door switch, limit switch and spool release switch for installation and adjust	23-109 23-110 23-112
	Controller harness broken or improperly wired	Check controller harness for circuit condition and continuity	23-107
	Faulty seat belt controller, light and buzzer	Check parts and replace if required	23-107 23-113
	Warning light does not go on	Check light for condition and replace if required	–
Shoulder belt retractor does not operate properly	Poor belt retraction	Adjust belt retracting section	–
	Faulty spool release	Check for foreign matter caught in lower section of lever and replace if required	–
	Faulty shoulder belt retractor	Replace retractor	23-109 23-110
Buzzer warning is not given even when buckling-up is not made	Connector in poor contact	Check connector for continuity	23-113
	Wire harness broken	Check wire harness	–
	Faulty buckle switch	Replace buckle switch	23-110
	Faulty buzzer	Replace buzzer	23-113
	Wire harness caught by something	Correct wire harness	–
Buzzer warning is given even when properly buckled up	Faulty buckle switch	Replace buckle switch	23-110
	Wire harness caught by something	Correct wire harness	–

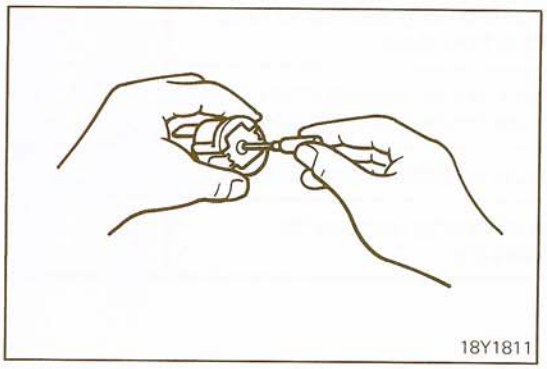

CIRCUIT BREAKER RESETTING

(1) Insert wire in the reset hole and push lightly.
(2) Check the circuit breaker for continuity across the circuit breaker terminals. If there is no continuity, replace the circuit breaker.
(3) If the circuit breaker blows again, the circuit is shorted.

CIRCUIT DIAGRAM

POWER WINDOW CIRCUIT

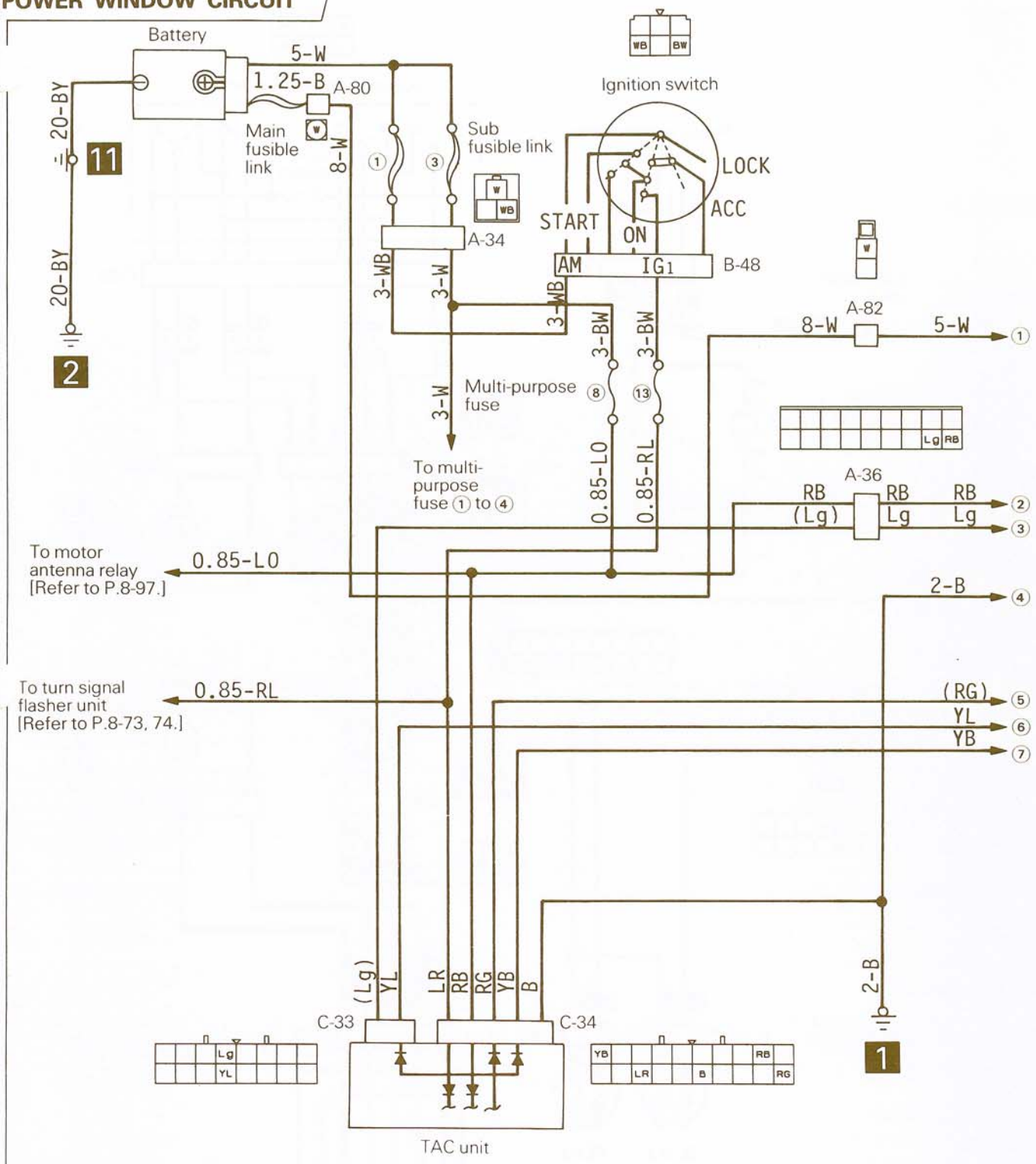

Remarks
(1) For details of grounding points (ex.: 2), refer to page 8-11.
(2) The circuit lines ended with number ①, ② and so on are in continuation to those with the corresponding number on opposed page. (i.e., the line ① on the left-hand page is connected to the line ① on the right-hand page.)

Wire color code

B: Black	Br: Brown	G: Green
Gr: Gray	L: Blue	Lg: Light green
Ll: Light blue	O: Orange	P: Pink
R: Red	Y: Yellow	W: White

STB Revision

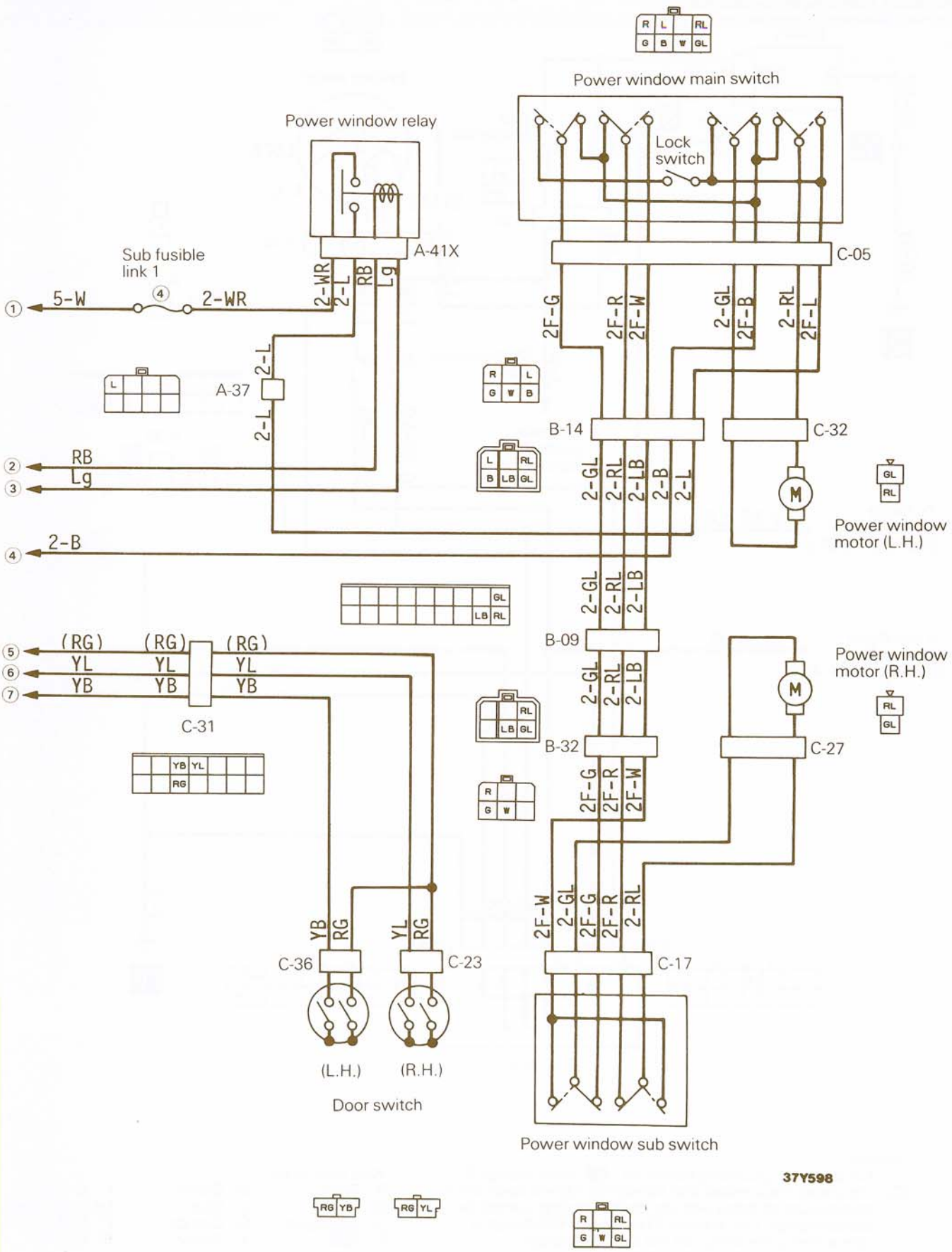

STB Revision

CENTRAL DOOR LOCKING SYSTEM CIRCUIT

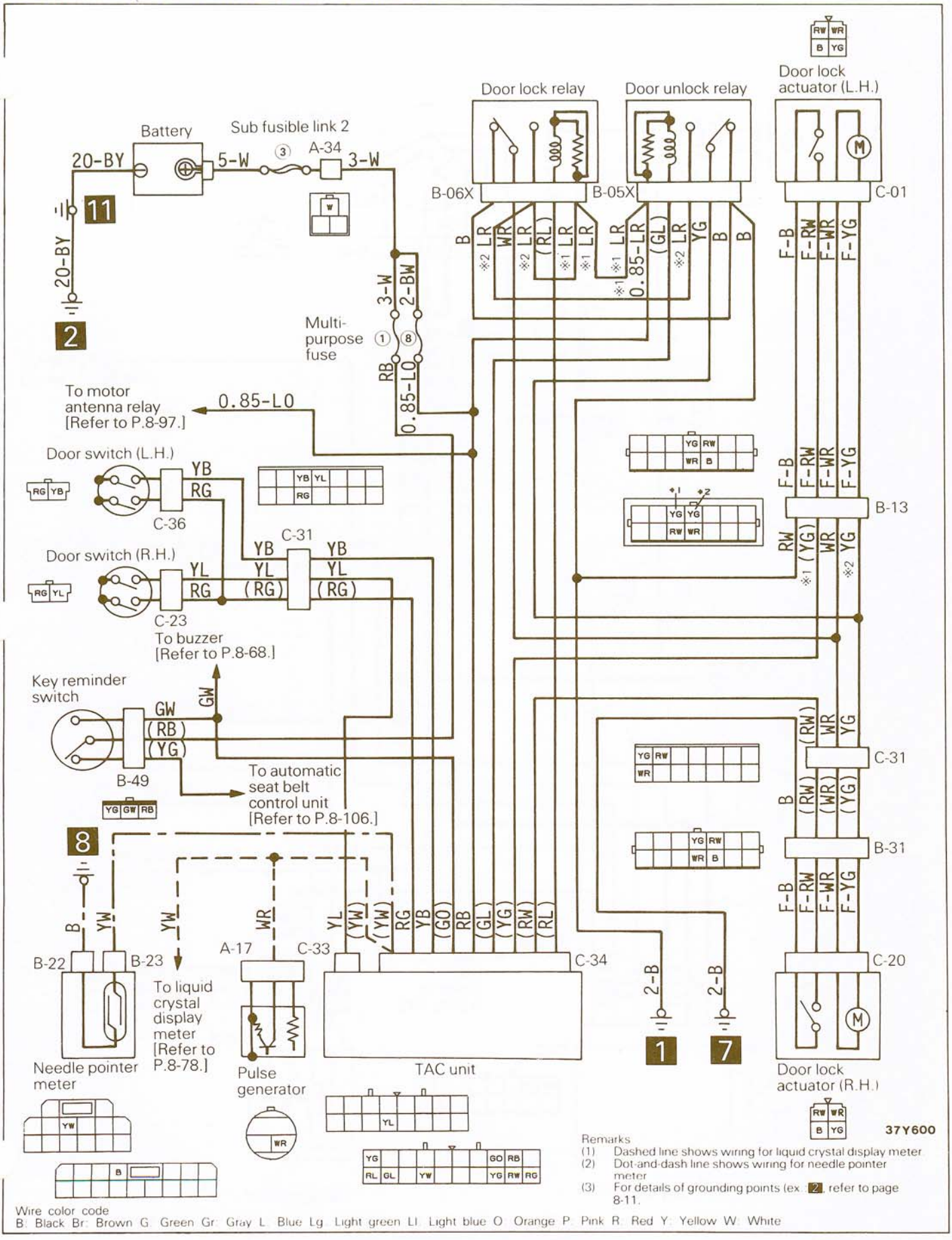

REMOTE-CONTROLLED MIRROR CIRCUIT

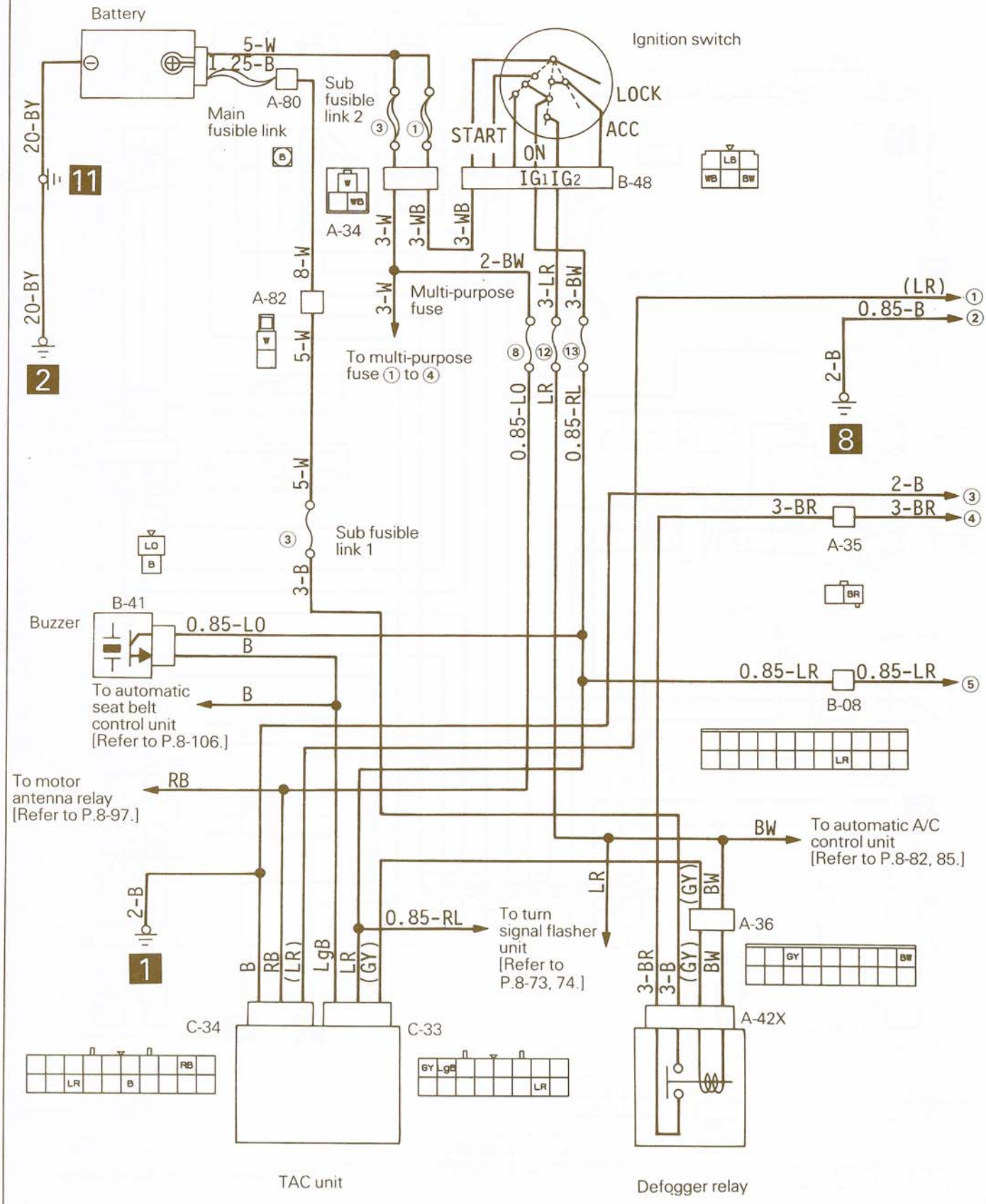

STB Revision

Remarks
(1) For details of grounding points (ex.: 2), refer to page 8-11.
(2) The circuit lines ended with number ①, ② and so on are in continuation to those with the corresponding number on opposed page. (i.e., the line ① on the left-hand page is connected to the line ① on the right-hand page.)

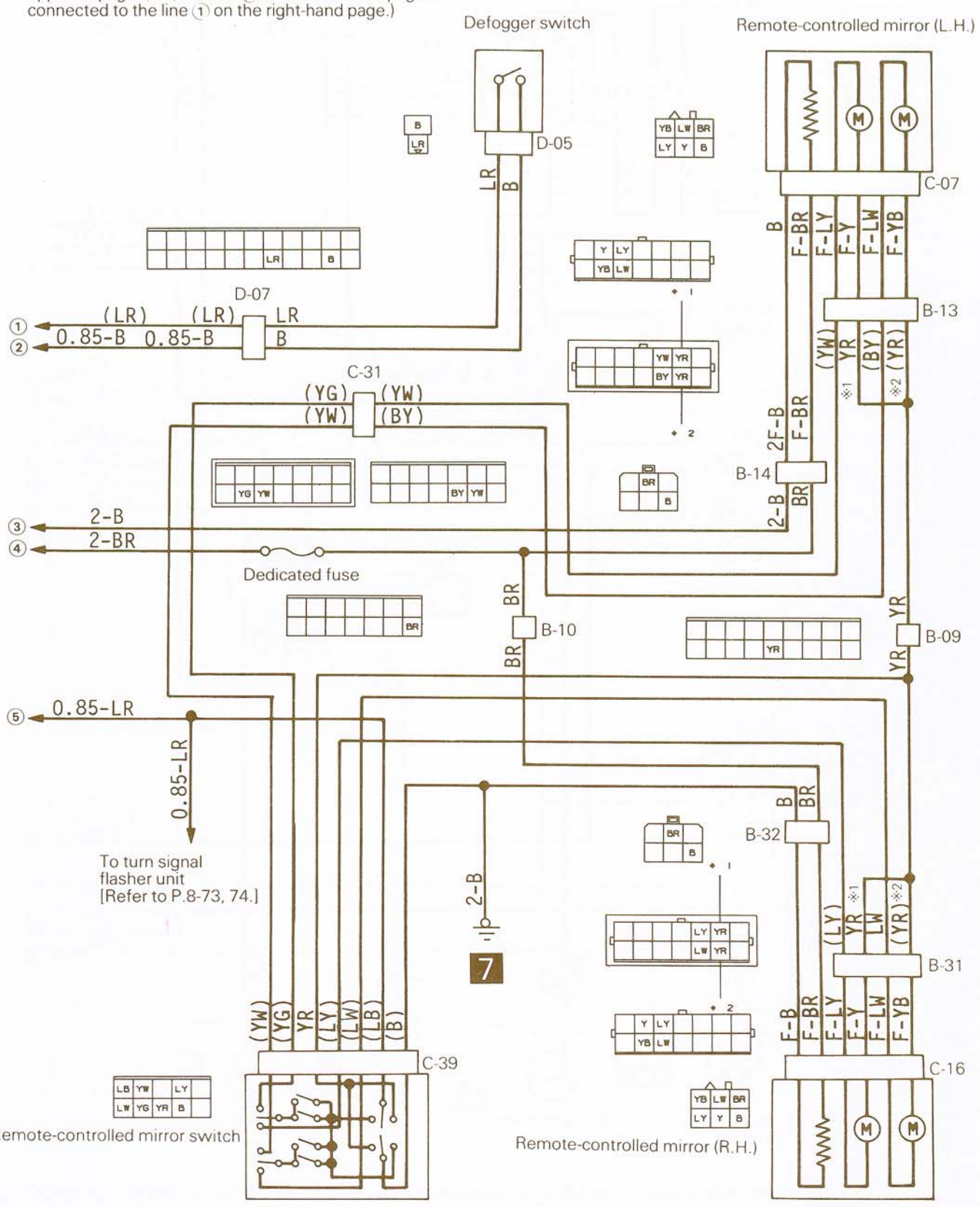

Wire color code
B: Black Br: Brown G: Green Gr: Gray L: Blue Lg: Light green
Ll: Light blue O: Orange P: Pink R: Red Y: Yellow W: White

37Y601

AUTOMATIC SEAT BELT CIRCUIT

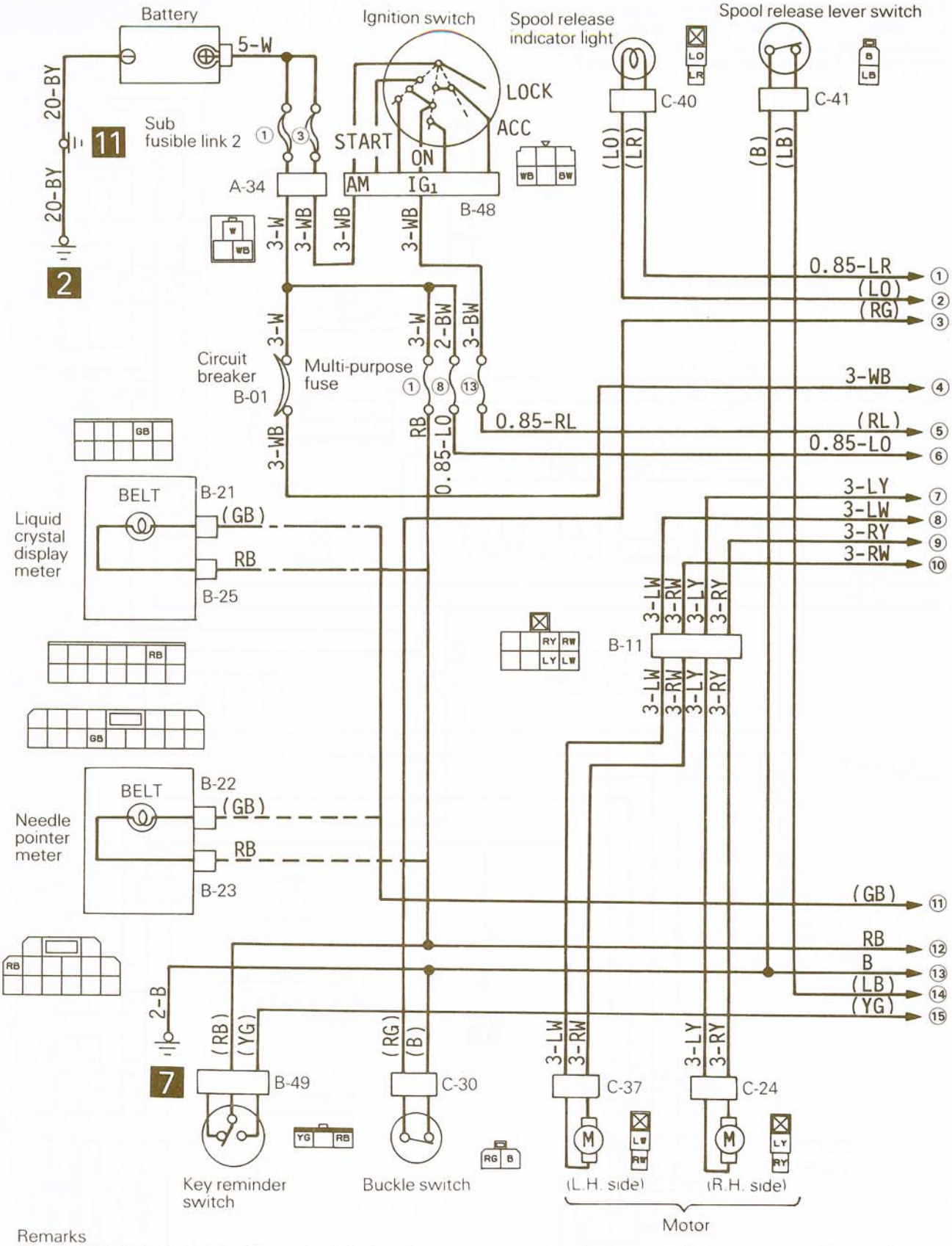

Remarks
(1) The circuit lines ended with number ①, ② and so on are in continuation to those with the corresponding number on opposed page. (i.e., the line ① on the left-hand page is connected to the line ① on the right-hand page.)
(2) For details of grounding points (ex.: 2), refer to page 8-11.
(3) Dashed line shows wiring for needle pointer meter.
(4) Dot-and-dash line shows wiring for liquid crystal display meter.

STB Revision

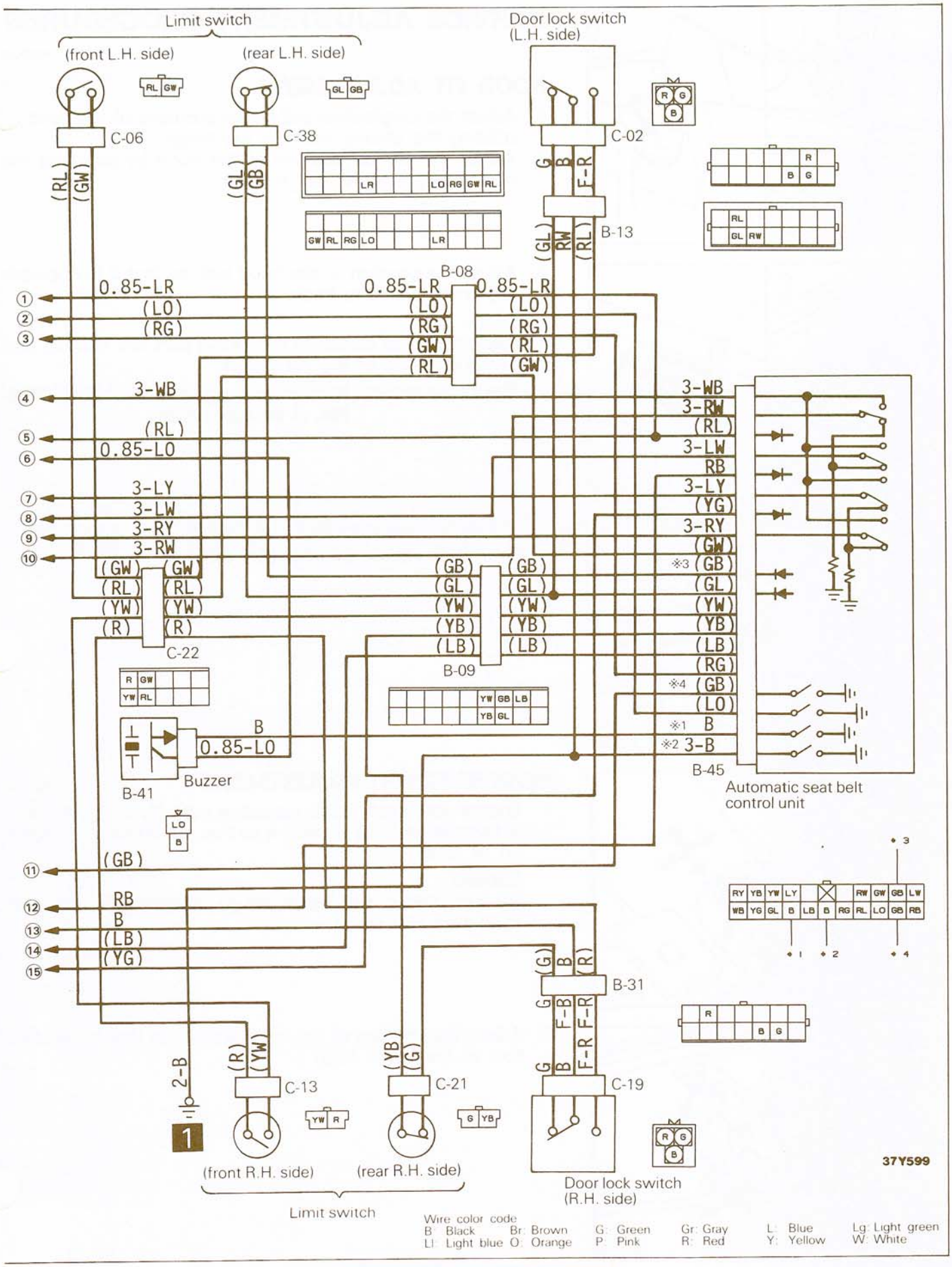

STB Revision

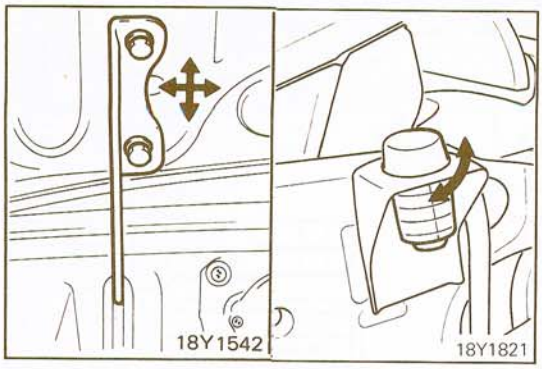

SERVICE ADJUSTMENT PROCEDURES

N23FAAF

HOOD FIT ADJUSTMENT

1. Adjust the longitudinal and lateral positions of the hood utilizing the oblong holes in the hinge.
2. Adjust the vertical position of the hood by adjusting the hood bumper either up or down.

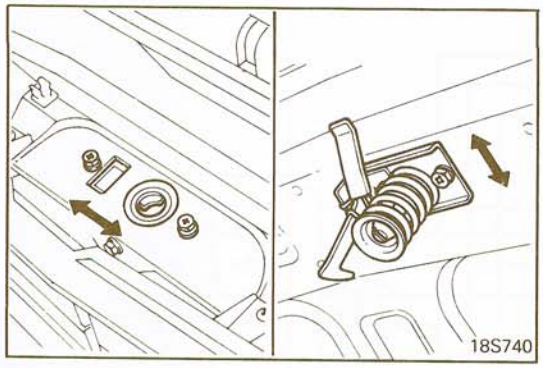

3. Adjust the position of the hood lock so that it is in proper alignment with the hook.

   NOTE
   Apply specified grease to the sliding part, the rotating part and the spring of the hood lock.

   Specified grease: Multipurpose grease SAE J310, NLGI No. 2 or equivalent

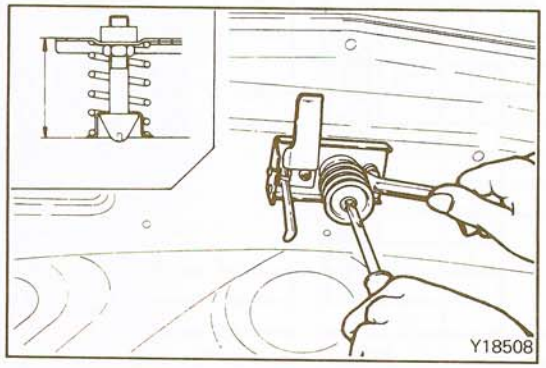

4. Adjust the length of the hook bolt to the standard value.

   Standard value: 53 mm (2.1 in.)

REAR HATCH FIT ADJUSTMENT

N23FLAA

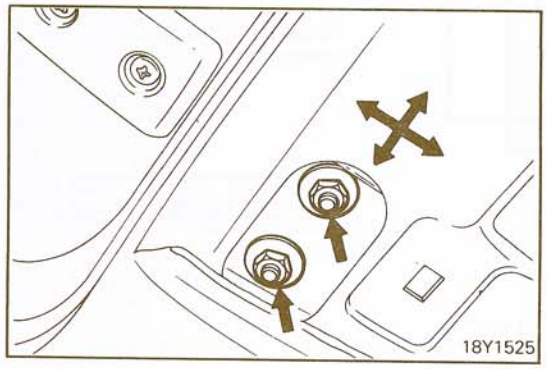

1. Loosen the hatch hinge mounting nuts on the body side.
2. Adjust the hatch by moving it so that the clearance is equal on all sides.

   Caution
   Do not loosen the hatch hinge mounting nuts more than two full turns.

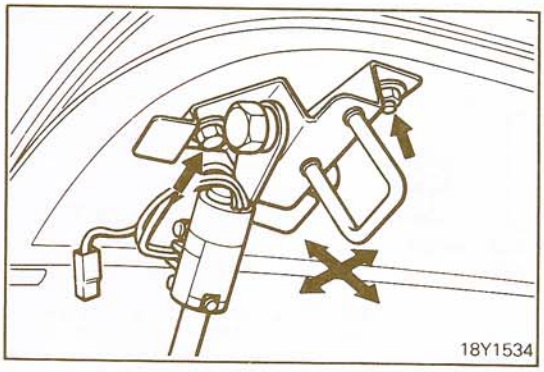

3. Adjust the position of the hatch striker so that it matches that of the hatch latch.

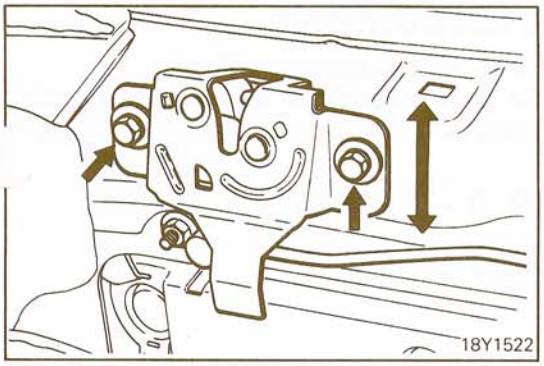

4. Adjust the position of the hatch latch so that it matches that of the hatch striker.

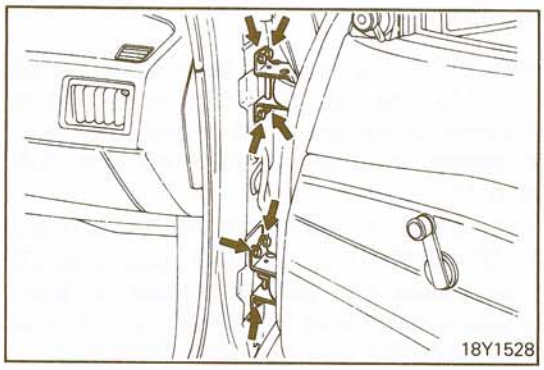

DOOR FIT ADJUSTMENT N23FEAD

1. Loosen the hinge mounting bolts on the body side, and then move the door upward, downward, forward and backward to adjust it so that the clearance around it is equal.
2. Loosen the hinge mounting bolts of the door side, and then move the door to the left and right to adjust the surfaces.

Caution
Attach protection tape to the fender edges near the place where the hinge is installed.

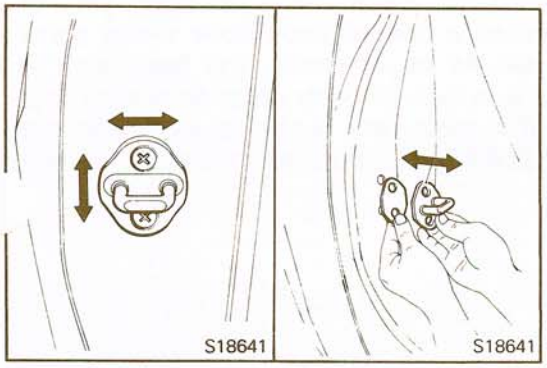

3. Adjust fit between the front fender and front door panel by loosening the door side attaching bolts and increasing or decreasing shims.
4. Adjust engagement between the striker and door latch by increasing or decreasing striker shims and/or sliding the striker vertically or horizontally.

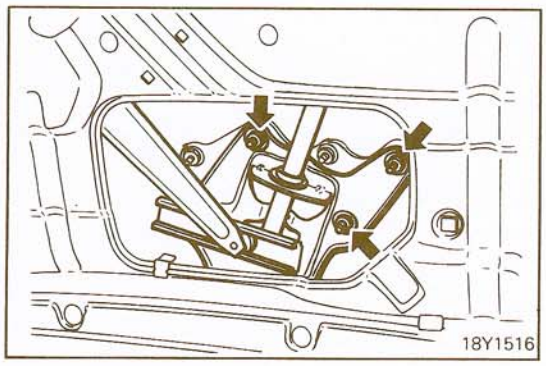

DOOR GLASS ADJUSTMENT N23FFAE

1. Remove the door trim and waterproof film. (Refer to P.23-52.)
2. Raise the door glass fully, and then adjust the following items so that the door glass fits evenly into the door glass channel all the way around:
   (1) Loosen the door glass mounting nuts, and then adjust the door glass by moving it forward, backward, upward, downward, and to the left and right.
   (2) Adjust the tilt of the door glass by tightening the door glass mounting nuts.

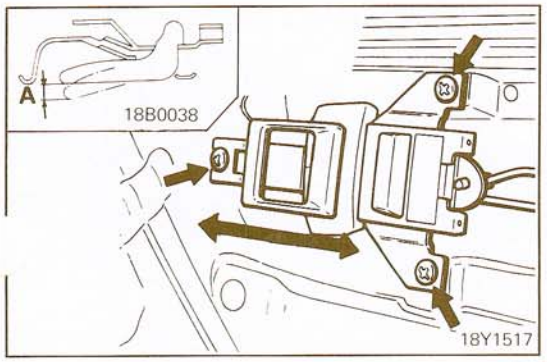

INSIDE HANDLE PLAY ADJUSTMENT N23FGAD

1. Remove the door trim and waterproof film.
2. Move the mounting position of the inside handle longitudinally in order to adjust the play of the inside handle.

Standard value (A): 4 – 10 mm (0.16 – 0.39 in.)

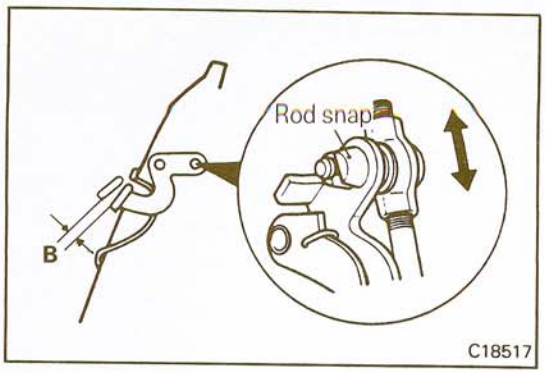

OUTSIDE HANDLE ADJUSTMENT

N23FHAD

1. Remove the door trim and waterproof film.
2. Remove the outside handle rod from the outside handle, and then adjust the play of the outside handle by turning the top of the rod.

Standard value (B): 3 – 8 mm (0.12 – 0.31 in.)

NOTE
Be sure to install new rod snap.

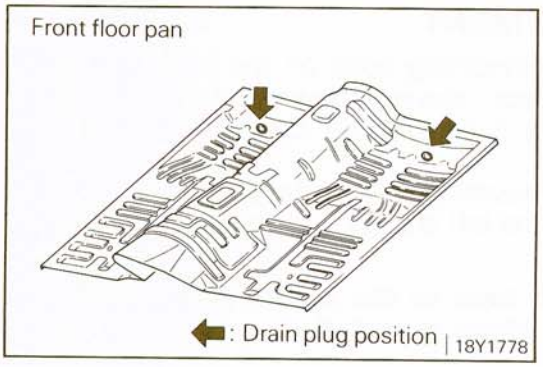

FLOOR PAN INSPECTION

A common result of bodyleaks is a soaked floor mat pad or carpet, and it's not unusual to find that the water is getting in through the floor pan to some other low point in the body. It is possible however, for water to enter higher up and run downward to soak the mat.
Since a soaked mat should be removed for drying, it's a good way to start your check. Of course, mat removal means you'll have to take off door sill plates and pull out seats or seat cushion. But, this gives you a clear field for action so you can check body seam sealing and the plugs in the floor pan.
It's usually not practical to water test for floor pan or wheelhousing leaks unless a special underbody water spray arrangement is available. As an alternate, the best way to locate these leak points is to look for rusty seam edges or other traces of leaks after the mats and cushions are removed. Traces of mud are an indication that the water is coming in from below.

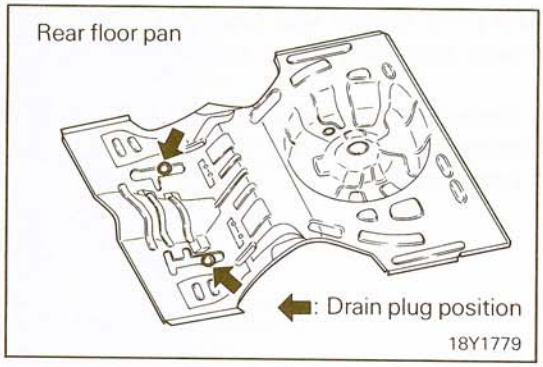

HOOD

N23HAAH

REMOVAL AND INSTALLATION

Post-installation Operation
- Adjusting Hood Fits
(Refer to P.23-18.)

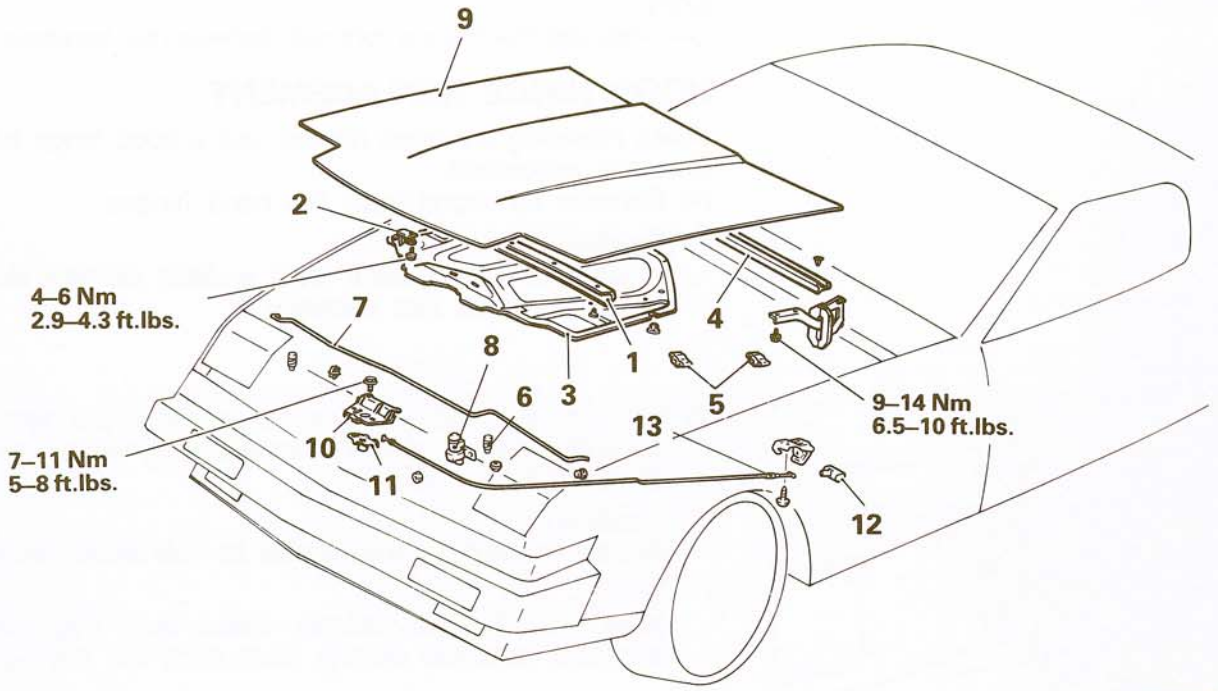

18Y1803

Hood panel removal steps

1. Hood weatherstrip, front
2. Hood hook
3. Heat protector
4. Hood weatherstrip, rear
5. Hood damper
6. Hood bumper
7. Hood support rod
◆◆ 8. Hood switch
9. Hood panel

Release cable removal steps

10. Hood lock plate
11. Hood lock
12. Hood release handle
13. Release cable

NOTE
(1) Reverse the removal procedures to reinstall.
(2) ◆◆: Refer to "Service Points of Removal".

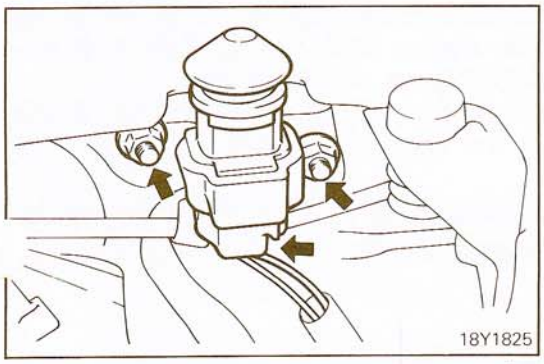

SERVICE POINT OF REMOVAL

8. REMOVAL OF HOOD SWITCH

Remove the hood switch as shown.

STB Revision

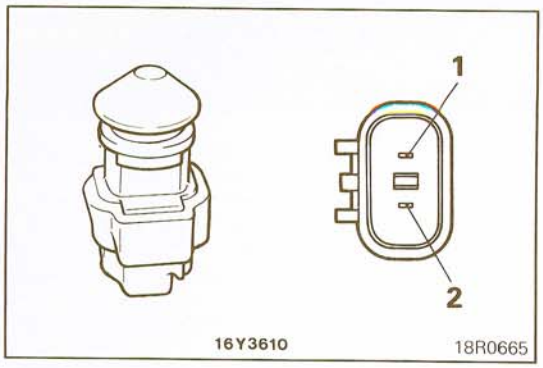

INSPECTION

HOOD SWITCH

(1) Disconnect the hood switch connector.
(2) Check the continuity between the terminals.

Terminal	1	2
Hood switch unpressed	○	○
Hood switch depressed		

NOTE
○–○ indicates that there is continuity between the terminals.

HOOD HINGE REPLACEMENT

When replacing the hood hinges, use a hood hinge kit by the following procedure:
(1) Remove the hood from the hood hinges.

Caution
Protect the front deck with a cloth so that the hood protrusions do not damage it.

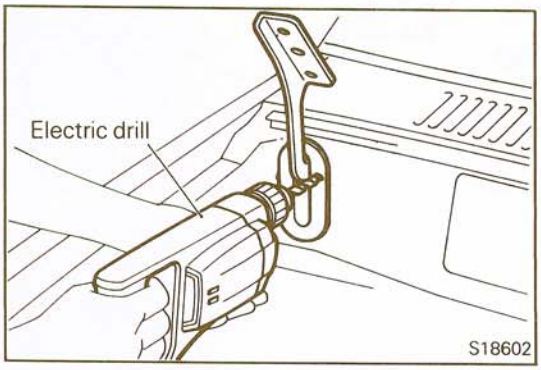

(2) Remove the hood hinges by breaking the spot welds fastening the hinges to the front deck by using a drill 8 mm (0.32 in.) in diameter.

Caution
Be careful not to drill holes in the deck panel.

NOTE
After removing the hinges, make sure that the hinge mounting surfaces on the front deck are flat and level.

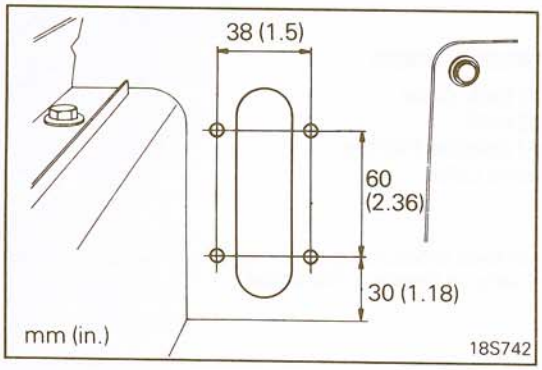

(3) Mark the hinge mounting positions on the front deck by using a punch.
(4) Drill the holes by using a drill 8 mm (0.32 in.) in diameter.

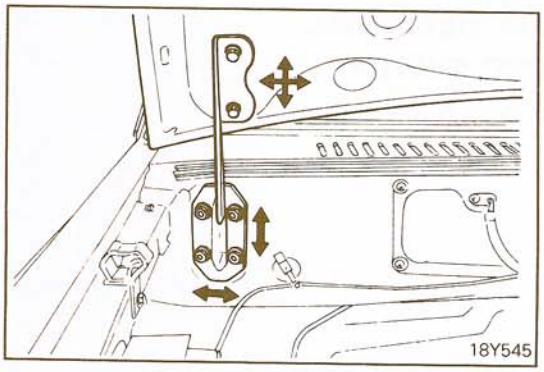

(5) Remove the access hole cover together with the boost sensor and the wiper motor. (Refer to GROUP 8. ELECTRICAL – Windshield Wipers and Washer.)
(6) Insert the brackets from the inside of the front deck, fit the hinges, and tighten the nuts temporarily.

NOTE
The work of installing hinges will be facilitated if adhesive is applied to the surfaces of the brackets in contact with the front deck.

(7) Install the hood.
(8) Adjust the hood alignment.

STB Revision

FUEL FILLER DOOR

N23JAAF

REMOVAL AND INSTALLATION

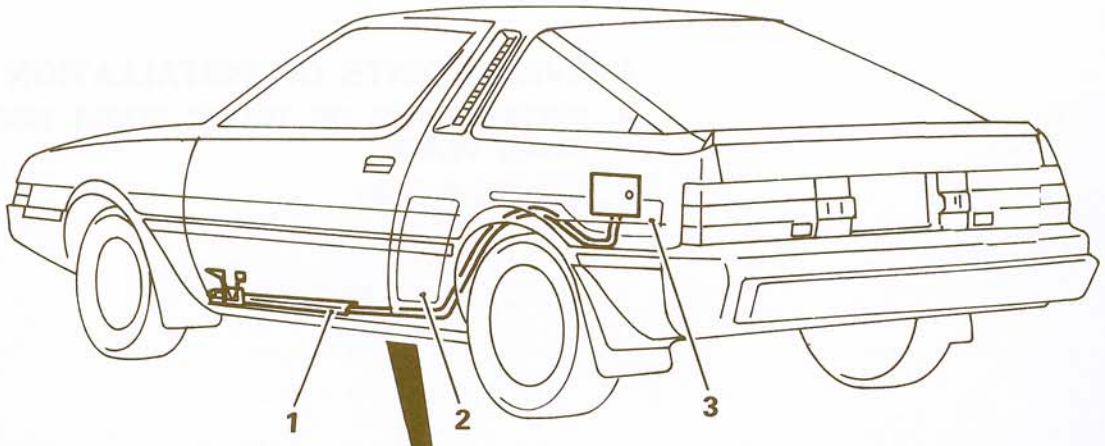

18Y1721

Vehicles with an intercooler

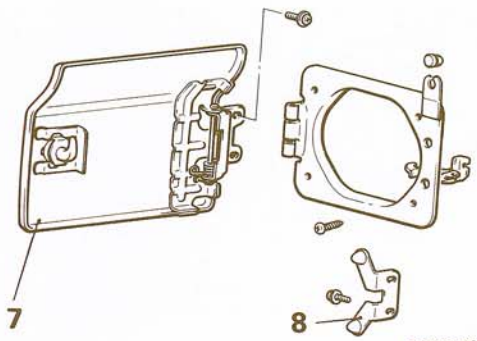

18Y1709

Vehicles without an intercooler

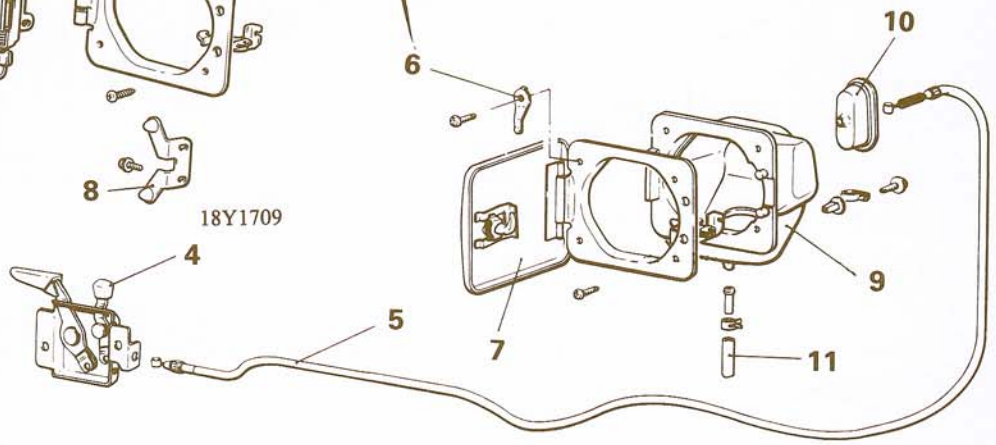

18YA19

Removal steps

◆◆ ▶◀ 1. Scuff plate
◆◆ 2. Quarter trim
◆◆ ▶◀ 3. Trunk room side trim
4. Lock release panel
5. Lock release cable
6. Spring
7. Filler door panel
8. Stop assembly
9. Filler neck cover
10. Grommet
11. Soft vinyl tube

NOTE
(1) Reverse the removal procedures to reinstall.
(2) ◆◆: Refer to "Service Points of Removal".
(3) ▶◀: Refer to "Service Points of Installation".

SERVICE POINTS OF REMOVAL

1. REMOVAL OF SCUFF PLATE / 2. QUARTER TRIM / 3. TRUNK ROOM SIDE TRIM

Refer to P.23-86.

SERVICE POINTS OF INSTALLATION

3. INSTALLATION OF TRUNK ROOM SIDE TRIM / 1. SCUFF PLATE

Refer to P.23-86.

REAR HATCH

N23OAAH

REMOVAL AND INSTALLATION

Post-installation Operation
- Adjusting Rear Hatch Fits (Refer to P.23-18.)

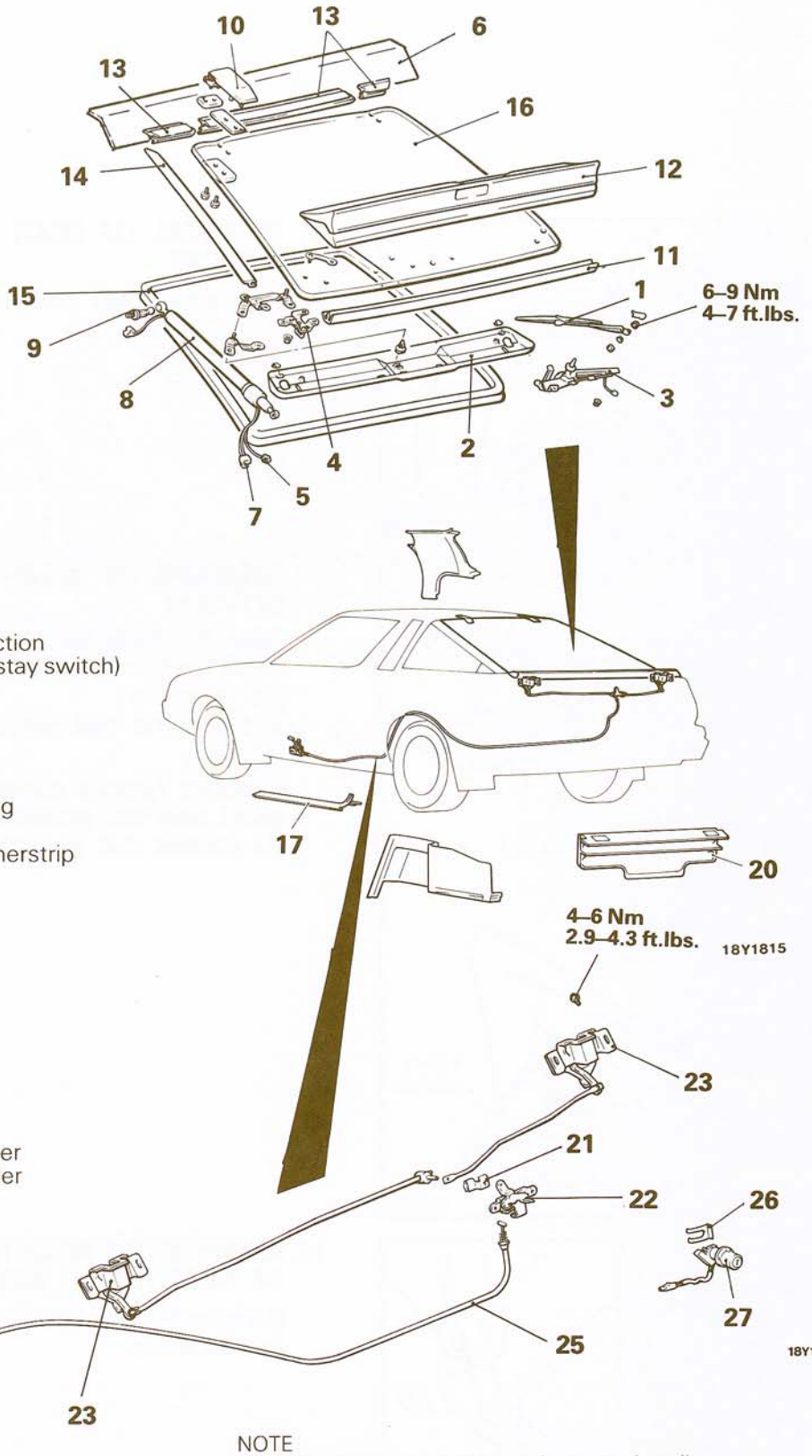

Rear hatch glass removal steps

- ◆◆ 1. Rear wiper arm
- 2. Rear hatch trim
- 3. Rear wiper motor
- 4. Rear hatch striker
- 5. High mounted stop light connector connection
- ◆◆ 6. Roll bar trim
- 7. Defogger terminal connection
- ◆◆ ◆◆ 8. Rear hatch stopper (with stay switch)
- 9. Ball joint
- ◆◆ 10. Rear hatch hinge
- 11. Protector
- ◆◆ ◆◆ 12. Rear hatch garnish (with rear spoiler)
- ◆◆ ◆◆ 13. Rear hatch upper moulding
- ◆◆ ◆◆ 14. Rear hatch side moulding
- 15. Rear hatch opening weatherstrip
- 16. Rear hatch glass

Lock release cable removal steps

- ◆◆ ◆◆ 17. Scuff plate
- ◆◆ 18. Quarter trim
- ◆◆ ◆◆ 19. Trunk room side trim
- ◆◆ ◆◆ 20. Rear end trim
- ◆◆ ◆◆ 21. Rod snap
- ◆◆ ◆◆ 22. Rear hatch link assembly
- ◆◆ ◆◆ 23. Rear hatch latch
- 24. Rear hatch handle
- 25. Lock release cable
- 26. Rear hatch lock key retainer
- 27. Rear hatch lock key cylinder

NOTE
(1) Reverse the removal procedures to reinstall.
(2) ◆◆: Refer to "Service Points of Removal".
(3) ◆◆: Refer to "Service Points of Installation".

STB Revision

SERVICE POINTS OF REMOVAL

6. REMOVAL OF ROLL BAR TRIM

Refer to P.23-86.

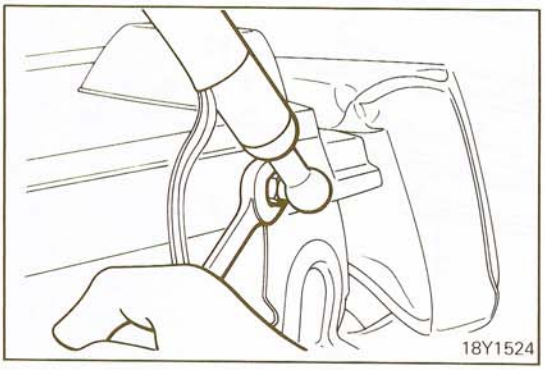

8. REMOVAL OF REAR HATCH STOPPER (WITH STAY SWITCH)

(1) Remove the rear hatch stopper from the body.

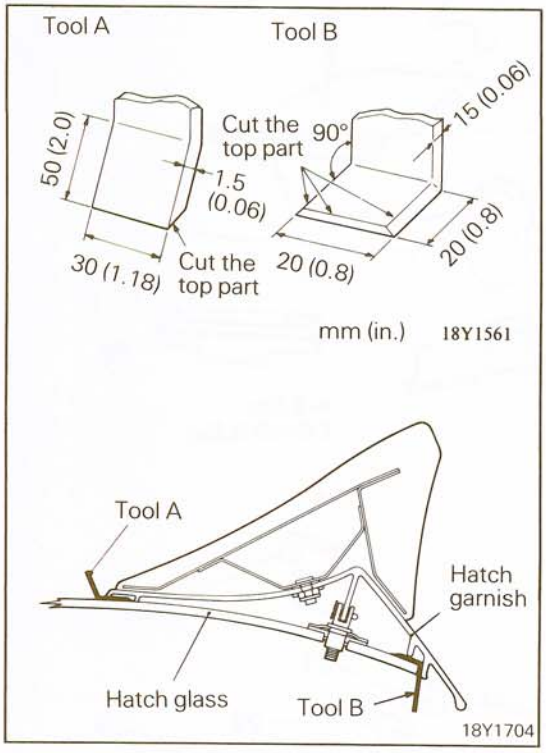

12. REMOVAL OF REAR HATCH GARNISH (WITH REAR SPOILER)

Align the tools shown in the illustration along the glass, press them in with a plastic hammer or similar tool, and cut the adhesive.
Remove the rear hatch garnish.

Caution
Remove foreign material from the gap between the glass and the garnish with compressed air.
Be careful not to scratch the glass.

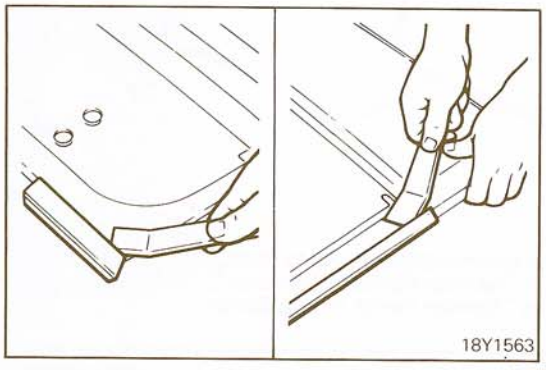

13. REMOVAL OF REAR HATCH UPPER MOULING / 14. REAR HATCH SIDE MOULDING

Remove the rear hatch mouldings while using tool A to cut the adhesive.

17. REMOVAL OF SCUFF PLATE / 18. QUARTER TRIM / 19. TRUNK ROOM SIDE TRIM / 20. REAR END TRIM

Refer to P.23-86.

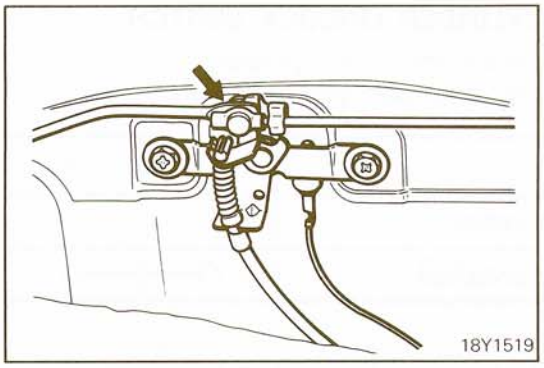

21. REMOVAL OF ROD SNAP

(1) Disconnect the rod snap and the left and right rods from the rear hatch link assembly.
(2) Disconnect the lock release cable from the rear hatch link assembly.

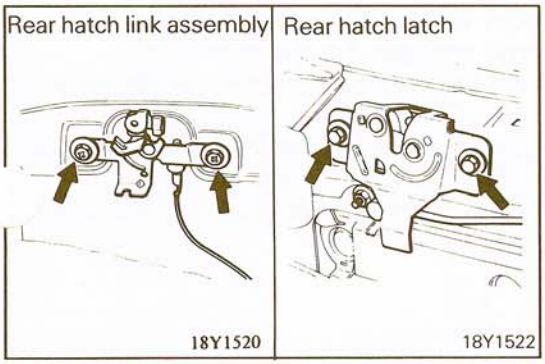

22. REMOVAL OF REAR HATCH LINK ASSEMBLY / 23. REAR HATCH LATCH

(1) Remove the rear hatch link assembly.
(2) Remove the left and right rear hatch latches together with the rod.

INSPECTION

STAY SWITCH

(1) Disconnect the stay switch connector. Then, with the rear hatch closed (with stay switch turned ON), check the stay switch for continuity across terminals.

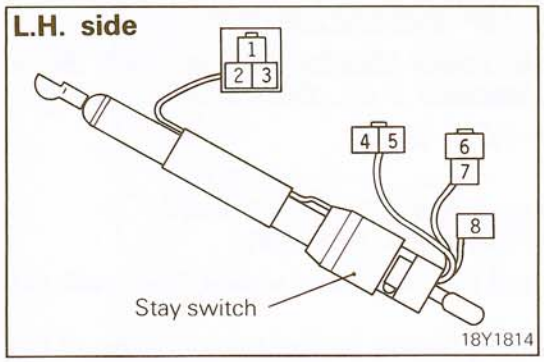

Terminal	1	2	3	4	5	6	7	8
Stay switch (L.H. side)	○			○				
	○							○
	○						○	
		○			○			
			○			○		

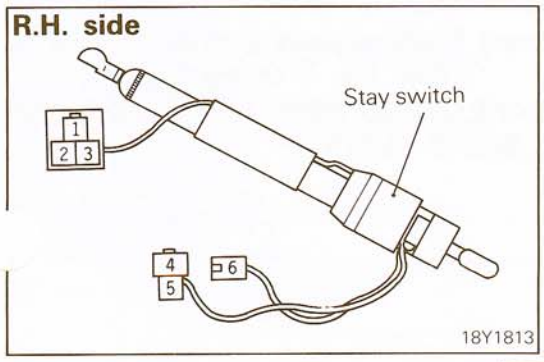

Terminal	1	2	3	4	5	6
Stay switch (R.H. side)	○					○
		○		○		
			○		○	

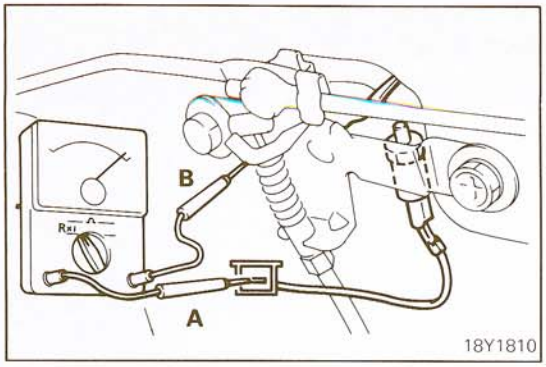

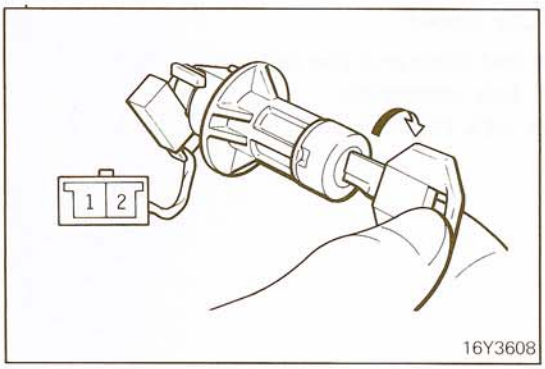

REAR HATCH SWITCH

(1) Unlock the rear hatch link.
(2) Check the continuity between the terminals.

Terminal	A	B
Rear hatch link locked		
Rear hatch link unlocked	○	○

NOTE
○–○ indicates that there is continuity between the terminals.

REAR HATCH KEY CYLINDER UNLOCK SWITCH

(1) Turn the key to unlock the lock cylinder.
(2) Check the continuity between the terminals.

Terminal	1	2
Rear hatch lock cylinder locked		
Rear hatch lock cylinder unlocked	○	○

NOTE
○–○ indicates that there is continuity between the terminals.

- Check the rear hatch hinge for cracks and damage.
- Check the rear hatch stopper for deterioration.
- Check the rear hatch link assembly for wear, damage or malfunction.
- Check the rear hatch latch for wear, damage or malfunction.
- Check the rear hatch striker for wear.
- Check the rear hatch opening weatherstrip for crac damage or deformation.

SERVICE POINTS OF INSTALLATION

23. INSTALLATION OF REAR HATCH LATCH / 22. REAR HATCH LINK ASSEMBLY / 21. ROD SNAP

(1) Install the rear hatch latch.

NOTE
Be sure the rear hatch latch is unlocked.
Install the rear hatch link assembly.

(2) Install the left and right rods and secure them with the clip.
(3) Apply the specified grease to the moving parts of the rear hatch link assembly and rear hatch latch assembly.

Specified grease: Multipurpose grease SAE J310, NLGI No. 2 or equivalent

20. INSTALLATION OF REAR END TRIM /19. TRUNK ROOM SIDE TRIM / 17. SCUFF PLATE

Refer to P.23-86.

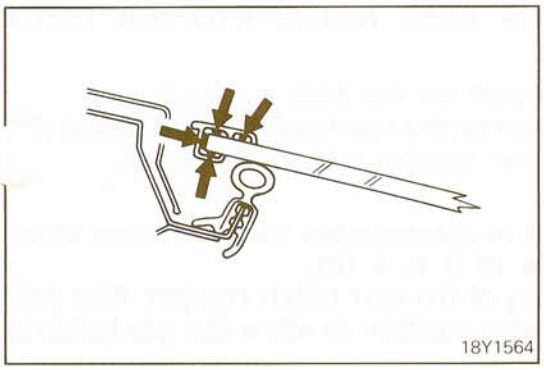

14. APPLICATION OF SEALANT TO REAR HATCH SIDE MOULDING / 13. REAR HATCH UPPER MOULDING

Install the rear hatch mouldings after applying the specified sealant (from the kit) to the entire circumference at the positions indicated in the illustration.

Specified sealant: Urethane adhesive (Essex Urethane "E" ... Auto Glass Sealant)

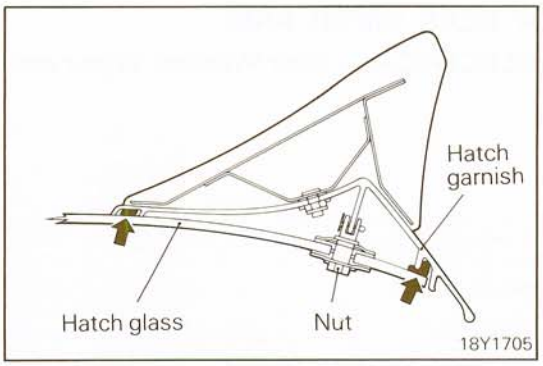

12. APPLICATION OF SEALANT TO REAR HATCH GARNISH (WITH REAR SPOILER)

(1) Apply the specified sealant (from the kit) to the entire circumference of the rear hatch garnish in the positions shown in the illustration.

Specified sealant: Urethane adhesive (Essex Urethane "E" ... Auto Glass Sealant)

(2) Align the mounting position of the rear hatch garnish so that the left and right clearances between the garnish and the rear hatch glass, and between the garnish and the rear hatch side moulding, are equal, and tighten the nuts.

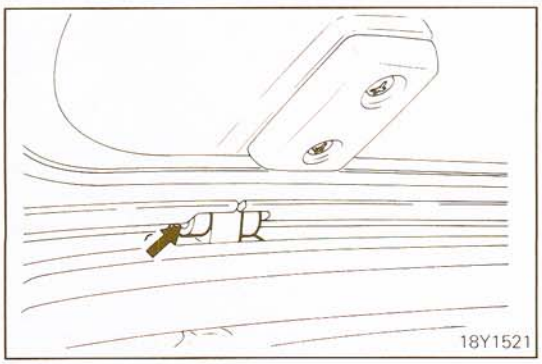

10. APPLICATION OF GREASE TO REAR HATCH HINGE

Apply the specified grease to the rear hatch hinge.

Specified grease: Multipurpose grease SAE J310, NLGI No. 0

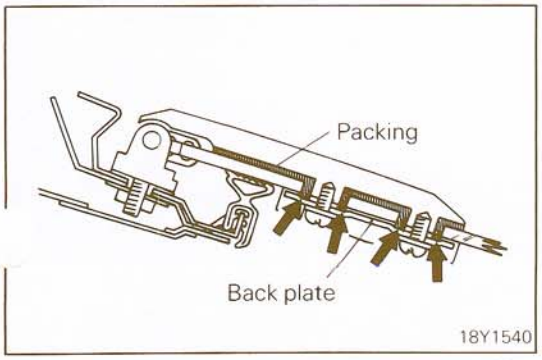

Caution
When installing the hatch glass, be sure that the rib of the packing projects from the glass surface so that the back plate does not contact the glass directly.

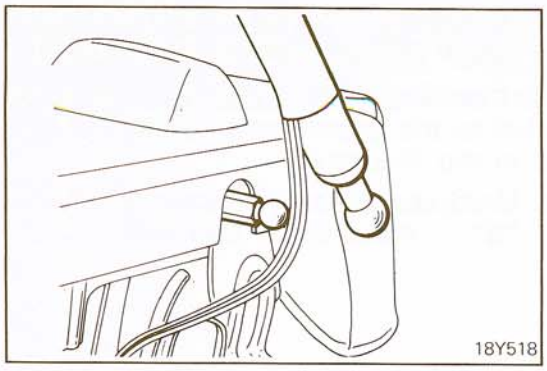

8. INSTALLATION OF REAR HATCH STOPPER (WITH STAY SWITCH)

(1) Install the ball joint on the body.
(2) Install the stopper on the rear hatch, and then push the bottom tip of the stopper into the ball joint.

Caution

1. **Never attempt to disassemble the rear hatch stopper or dispose of it in a fire.**
2. **When disposing of the rear hatch stopper, first drill a hole at the label position to allow the gas inside it to escape.**

1. INSTALLATION OF REAR WIPER ARM

Refer to GROUP 8 ELECTRICAL – Rear Window Wiper and Washer.

BUMPER

N23ZAAG

REMOVAL AND INSTALLATION

Front

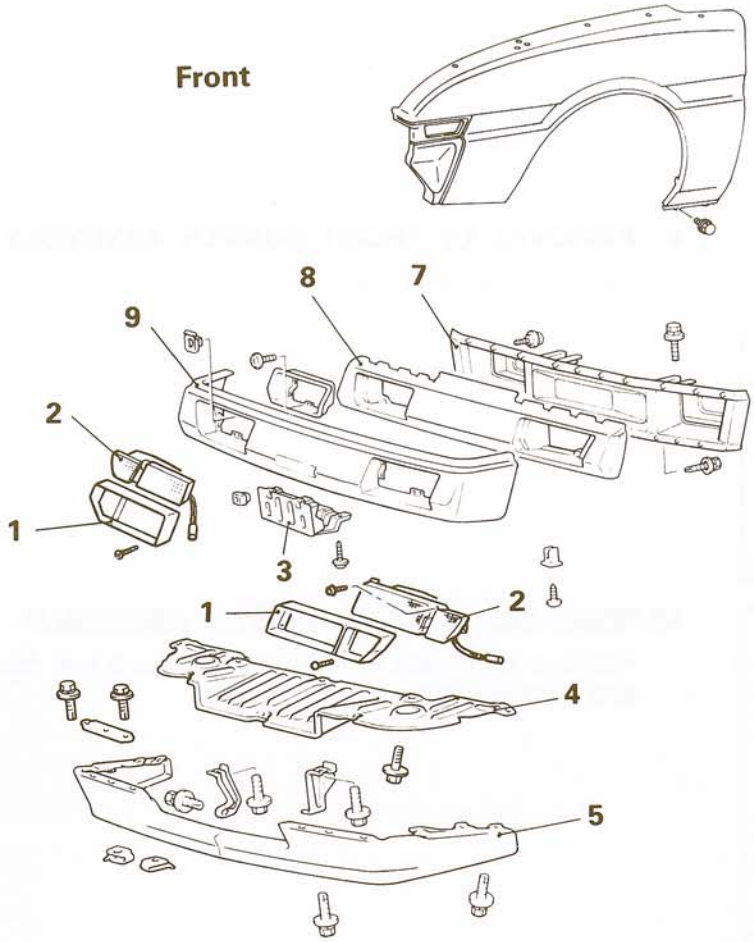

18Y1800

Rear

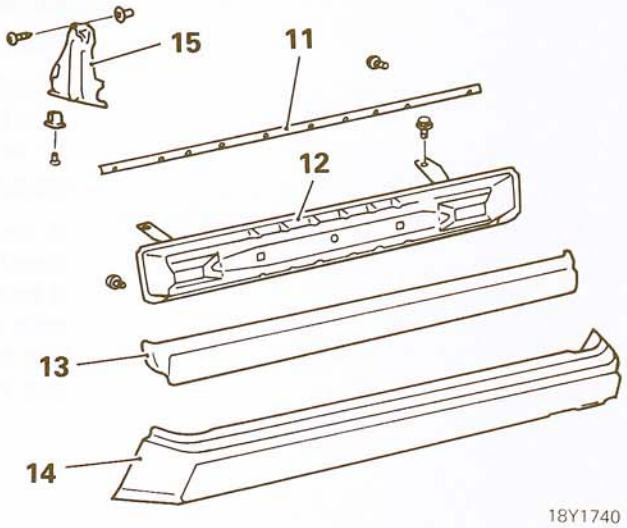

18Y1740

Front bumper removal steps

1. Front combination light bezel
2. Front combination light
3. Licence plate bracket
4. ◆◆ Air guide panel
5. ◆◆ Front skirt panel
6. ◆◆ Front bumper assembly (Rarts from step 7 to step 9)
7. Bumper reinforcement
8. Bumper core
9. Bumper face

Rear bumper removal steps

10. ◆◆ Rear bumper assembly (Parts from step 11 to step 14)
11. Bumper plate
12. Bumper reinforcement
13. Bumper core
14. Bumper face
15. Bumper guide plate

NOTE
(1) Reverse the removal procedures to reinstall.
(2) ◆◆: Refer to "Service Points of Removal"

SERVICE POINTS OF REMOVAL

4. REMOVAL OF AIR GUIDE PANEL / 5. FRONT SKIRT PANEL

Refer to P.23-73.

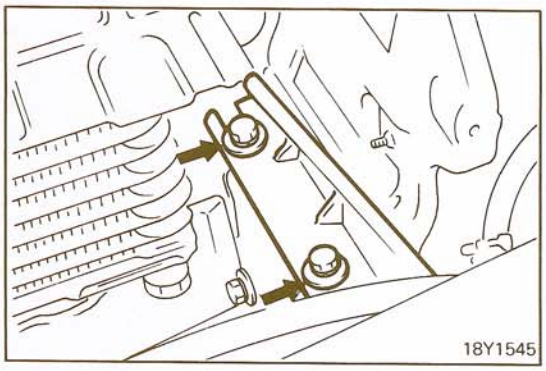

6. REMOVAL OF FRONT BUMPER ASSEMBLY

Remove the stay bolts.

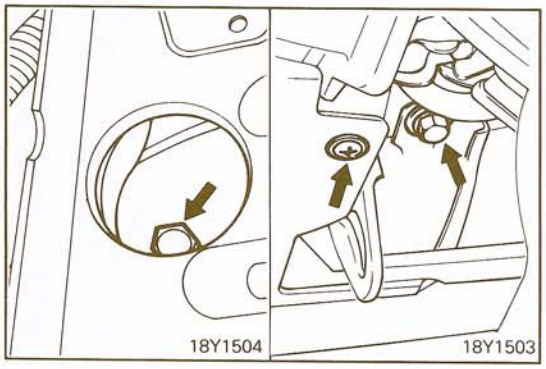

10. REMOVAL OF REAR BUMPER ASSEMBLY

Remove stay bolts from inside the trunk and from the rear end crossmember.

URETHANE BUMPER REPAIR

REPAIRABLE RANGE

HOLES

The damaged area must be shaped to a round or oval hole so that it can be easily filled with the putty; however, the diameter or length of the hole must be within 50 mm (2.0 in.).

CRACKING – SPLITTING

If the two sides of the crack have not separated, the length must be within 200 mm (8.0 in.).
If one end of the crack extends to the edge of the bumper, not only must the length of the crack be within 200 mm (8.0 in.), but also the length of the crack must be less than one-half of the bumper in the damaged area.

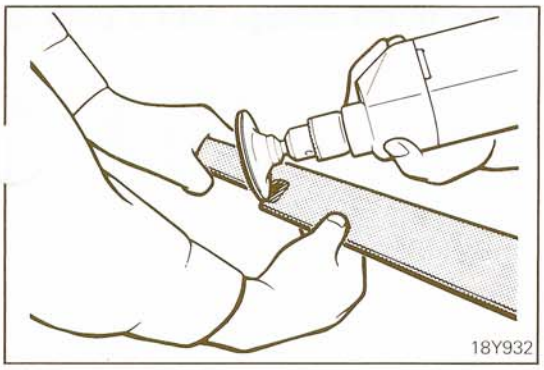

URETHANE BUMPER REPAIR PROCEDURE

1. If the damage is a hole, use a knife or similar tool to shape the hole into a round or oval opening.
2. If the damage is a crack or split, use a knife or similar tool to widen the opening to approximately 2 mm (0.08 in.).
3. Grind the damaged area to tapering shape of approximately 10 to 15 mm (0.4 to 0.6 in.) in width with a sanding disc (approx. #36 to #50).

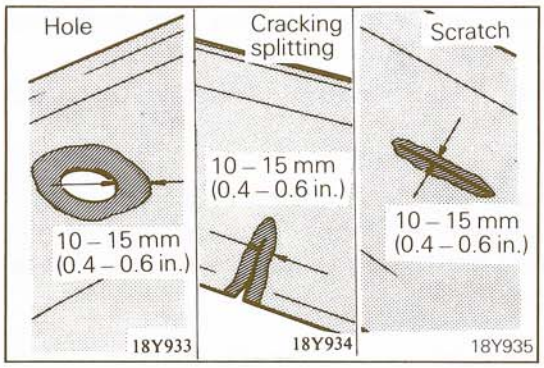

4. After initial grinding, the 3 basic types of repairs should be as shown in the illustrations.

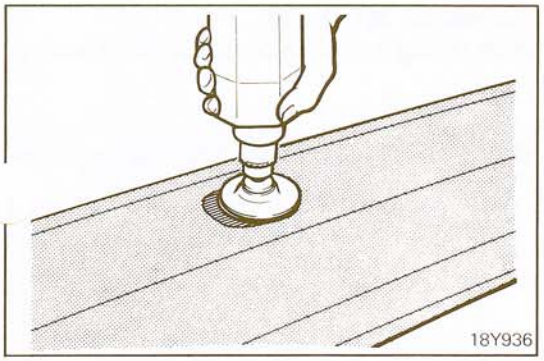

5. Using a disc, remove the surface coating around the damage, feather-edging the boundary line between the finish and the urethane at the same time.
   Try to feather-edge for 30 mm (1.18 in.) around the damage.

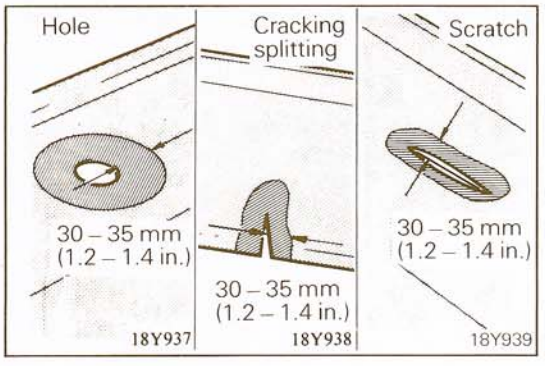

6. After feather-edging, the 3 basic types of repair should be as shown in the illustrations.

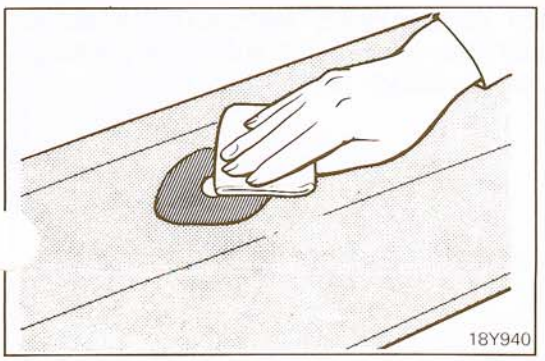

7. Remove any dirt adhering to the damaged area with a rag soaked in benzine.

   Caution
   Do not use a lacquer-type thinner.

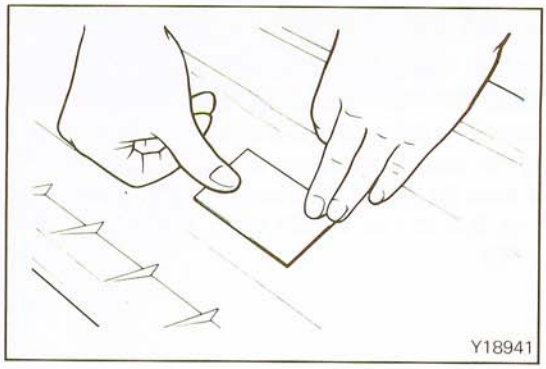

8. Cover the back surface of the damage with a piece of aluminum tape.

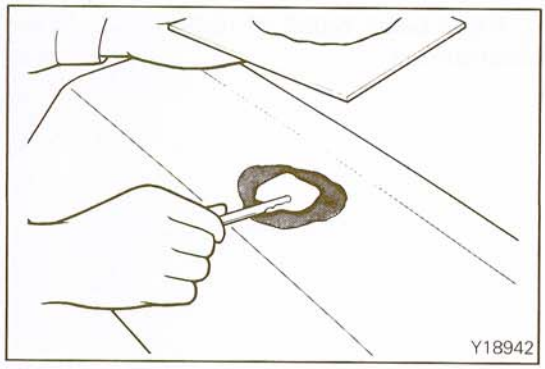

9. Prepare the adhesive, and apply it to the damaged area using a spatula.

   Specified adhesive: 3M Structural Adhesive 8101 or equivalent

   NOTE
   If the damage is large, apply two coats of adhesive. Apply the adhesive by moving the spatula from the edge of the damaged area toward the center, so that the damaged area will be filled with adhesive.

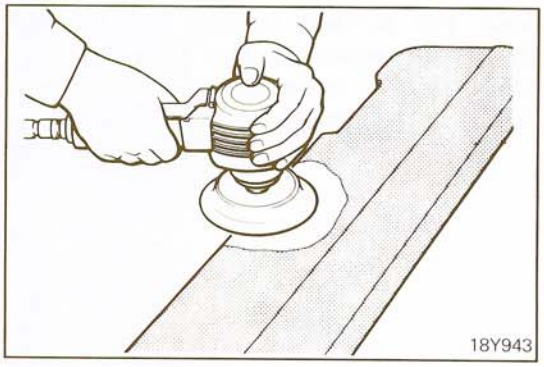

10. After applying the adhesive, let it dry.
11. Polish the repaired area, using a double-action sander with a disc.

    NOTE
    Sand repaired hole or cracks for about five minutes with the disc.

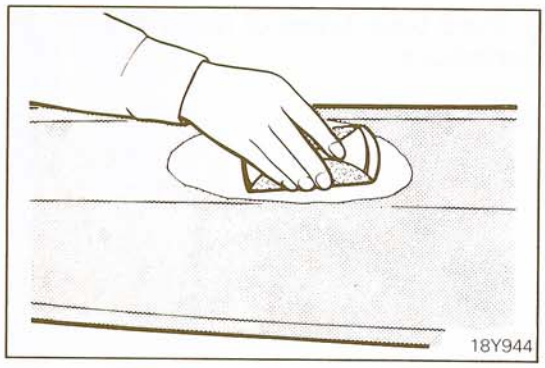

12. Finish the surface of the repaired area with a hand sanding block.

    NOTE
    The area should be carefully sanded so that there is no step at the boundary line between the adhesive and the undamaged surfacce coating.

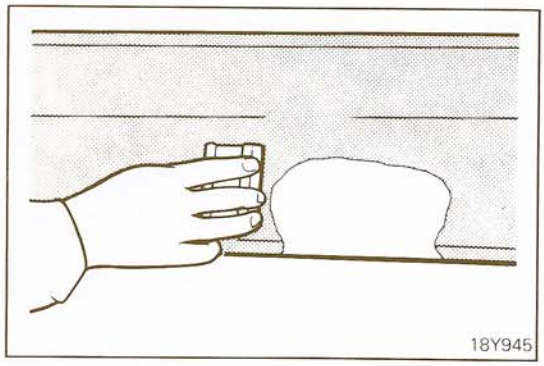

13. To improve the grip of the paint, wet-sand the entire surface of the bumper face while using #400-grit waterresistant sandpaper and a rubber pad.

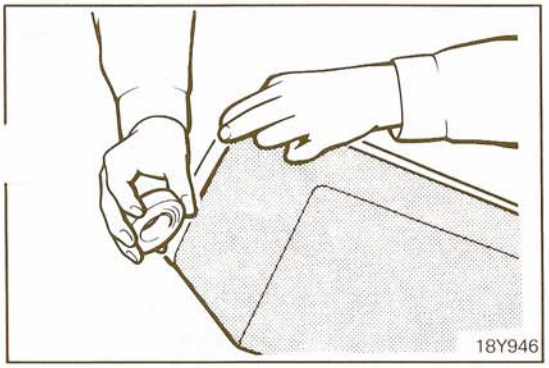

14. Cover the uncoated portion of the bumper face with masking tape.
15. Clean away any dirt from the bumper face with a rag soaked in benzine.

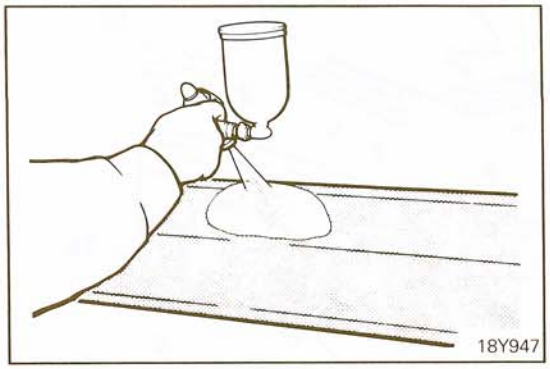

16. Spray a coat of primer on the damaged area.
17. Mix an appropriate combination of color coat and clear coat, and then spray the whole surface of the bumper face.

FENDERS

N23KAAK

REMOVAL AND INSTALLATION

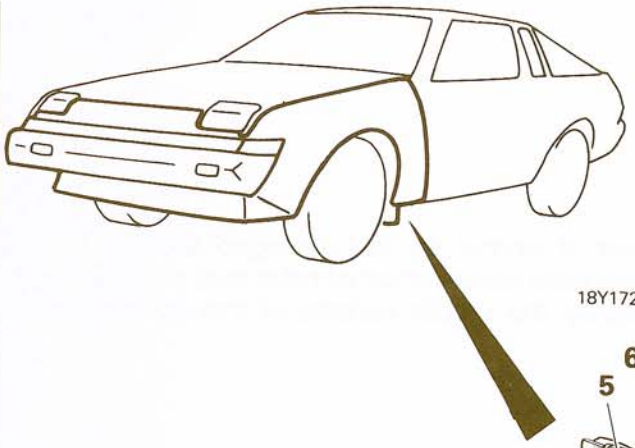

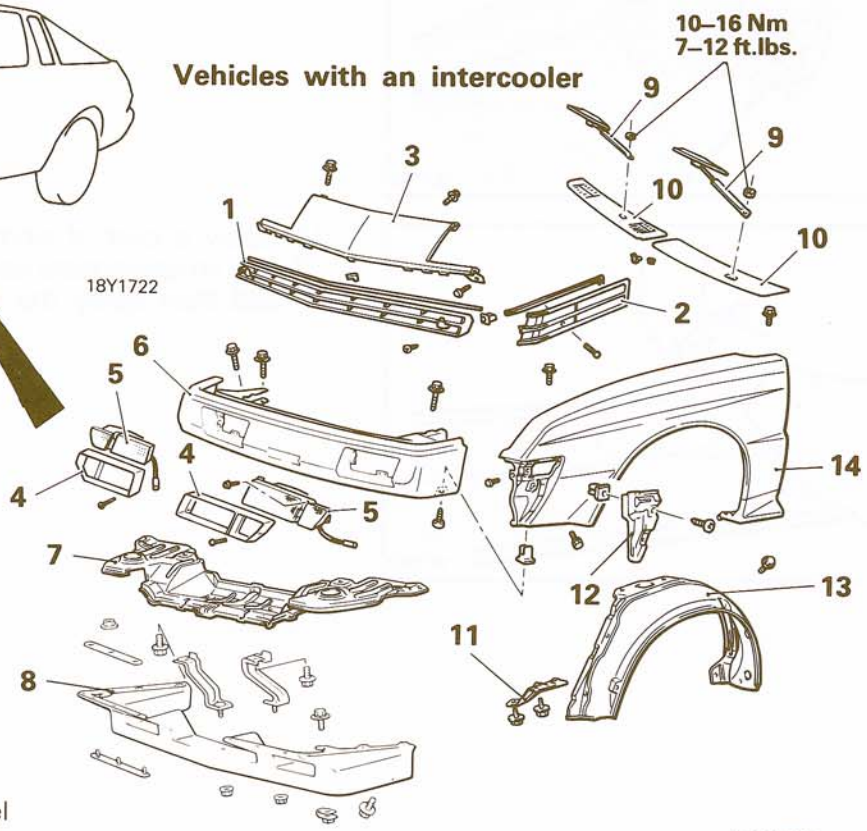

Removal steps

- ◆◆ 1. Radiator grille
- 2. Front corner garnish
- 3. Header panel
- 4. Front combination light bezel
- 5. Front combination light unit
- ◆◆ 6. Front bumper assembly
- ◆◆ 7. Air guide panel
- ◆◆ 8. Front skirt panel
- ◆◆ 9. Wiper arm
- ◆◆ 10. Front deck garnish
- 11. Front fender side stay (vehicles with an intercooler)
- 12. Front bumper plate
- 13. Fender liner
- ◆◆ ◆◆ 14. Fender

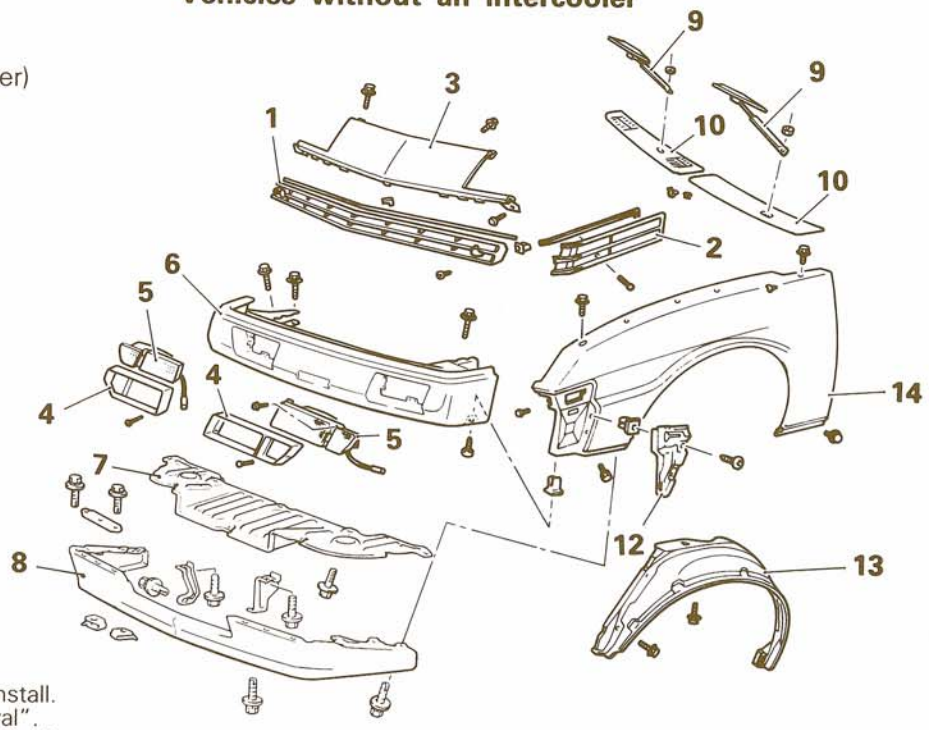

NOTE
(1) Reverse the removal procedures to reinstall.
(2) ◆◆: Refer to "Service Points of Removal".
(3) ◆◆: Refer to "Service Points of Installation".

STB Revision

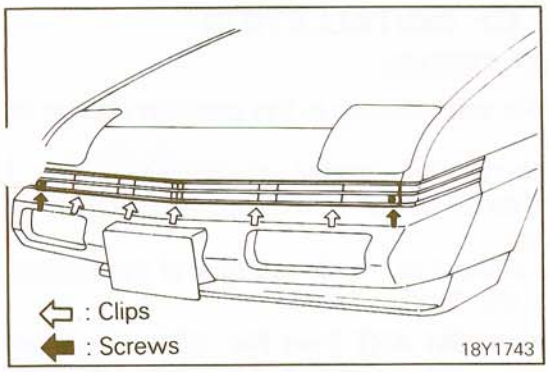

SERVICE POINTS OF REMOVAL

1. REMOVAL OF RADIATOR GRILLE

Remove screws, force out the clips from inside the engine room and remove the radiator grille.

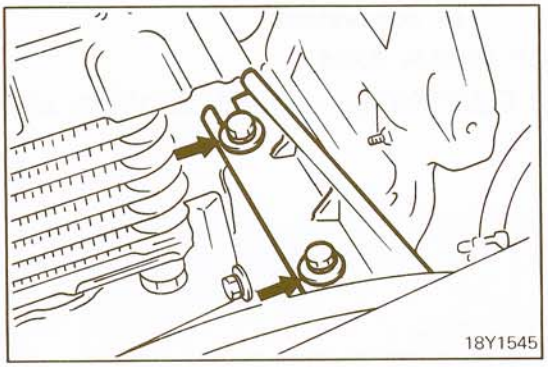

6. REMOVAL OF FRONT BUMPER ASSEMBLY

(1) Remove the mounting screws that mount the front bumper to the fender.
(2) Remove the bumper stay bolts and then remove the bumper assembly.

7. REMOVAL OF AIR GUIDE PANEL / 8. FRONT SKIRT PANEL

Refer to P.23-73.

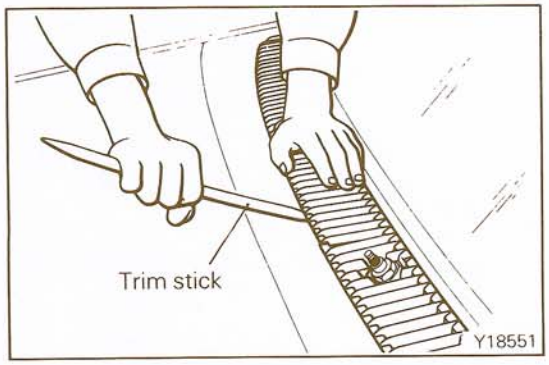

10. REMOVAL OF FRONT DECK GARNISH

Using the trim stick, remove the front deck garnish by prying at the clip positions.

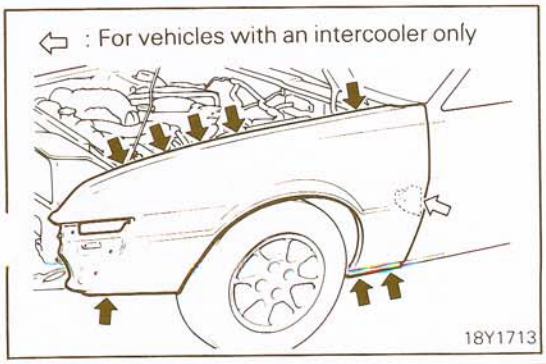

14. REMOVAL OF FENDER

Remove the fender mounting bolts.

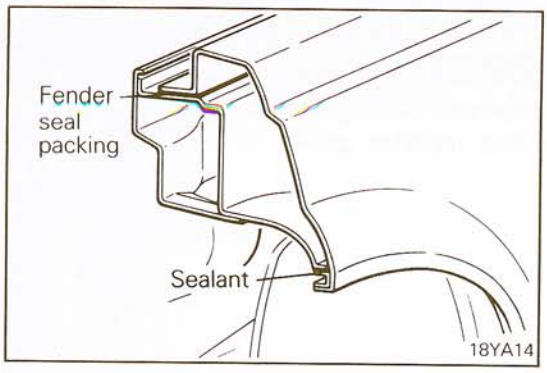

SERVICE POINTS OF INSTALLATION

14. INSTALLATION OF FENDER

(1) Mount the fender seal packing in the position shown in the illustration.
(2) Temporarily mount the fender in position, chec whether clearance is uniform at all points, and then tighten securely.
(3) Apply specified sealant to the flange part of the fender when installing the fender liner.

Specified sealant: 3M ART Part No. 8531, 8646 or 3M Adhesive EC-2153, EC-5528 or equivalent

9. INSTALLATION OF WIPER ARM

Refer to GROUP 8 ELECTRICAL – Windshield Wiper and Washer.

GRILLE AND MOULDING

N23RAAJ

REMOVAL AND INSTALLATION

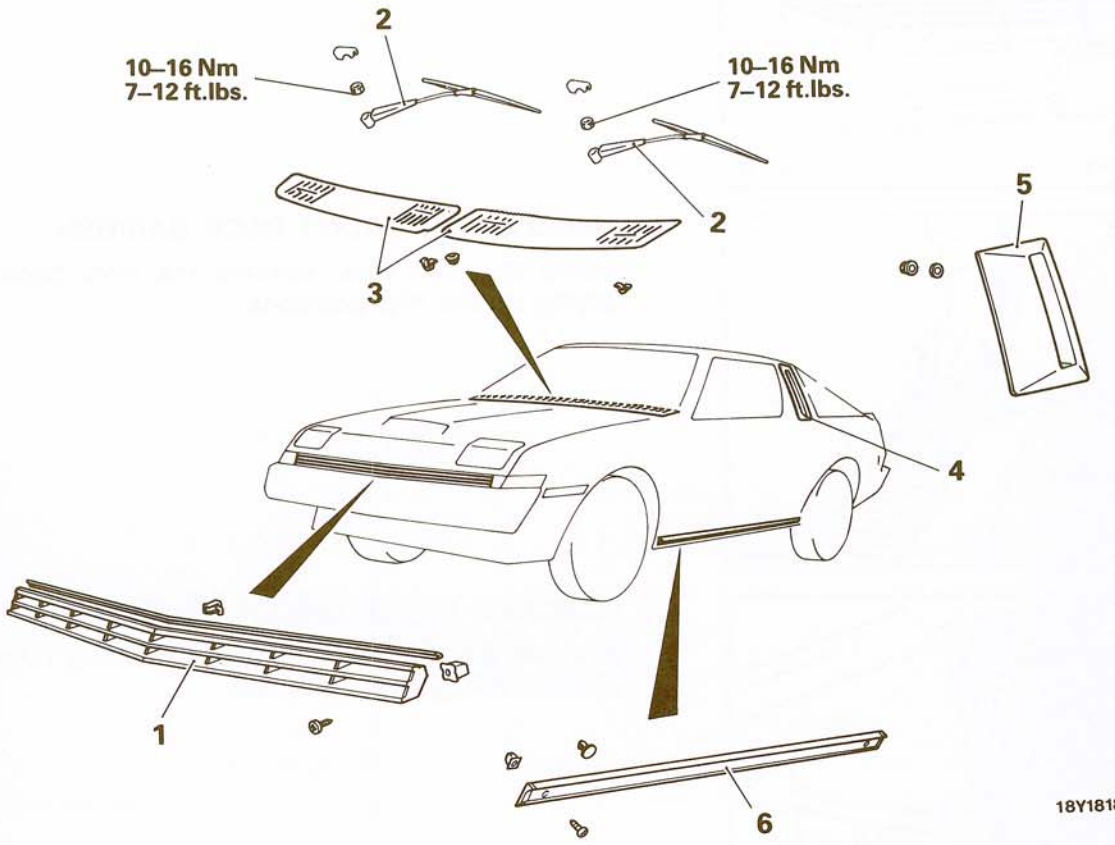

18Y1818

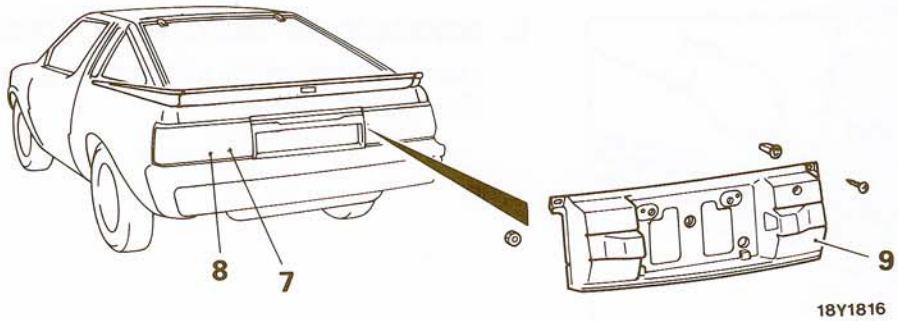

18Y1816

Radiator grill removal

◆◆ 1. Radiator grill

Front deck garnish removal steps

2. Wiper arm
◆◆ 3. Front deck garnish

Air outlet garnish

4. Quarter trim
◆◆ 5. Air outlet garnish

Skirt moulding removal steps (Vehicles without an intercooler)

◆◆ 6. Skirt moulding

Rear panel garnish removal steps

7. Rear end trim
8. Rear combination lamp
9. Rear panel garnish

NOTE
(1) Reverse the removal procedures to reinstall.
(2) ◆◆: Refer to "Service Points of Removal".

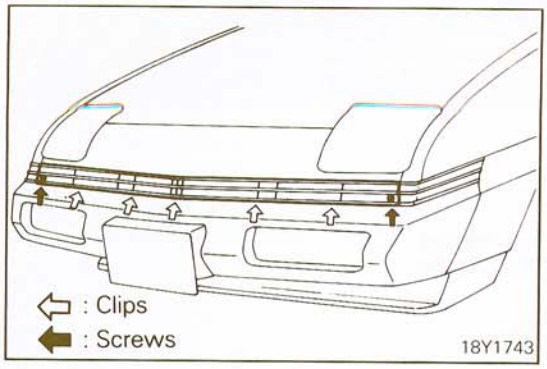

SERVICE POINTS OF REMOVAL

1. REMOVAL OF RADIATOR GRILLE

Remove radiator grille mounting nuts and clips and remove the radiator grille.

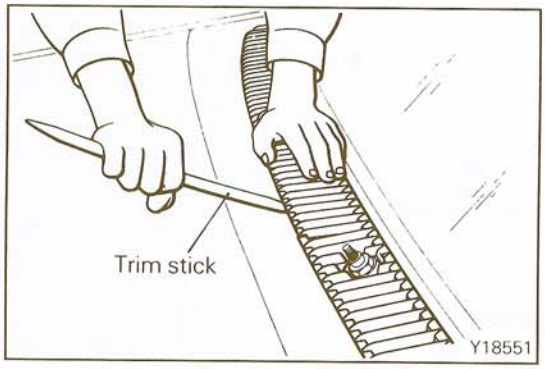

3. REMOVAL OF FRONT DECK GARNISH

Using the trim stick, remove the front deck garnish by prying at the clip positions.

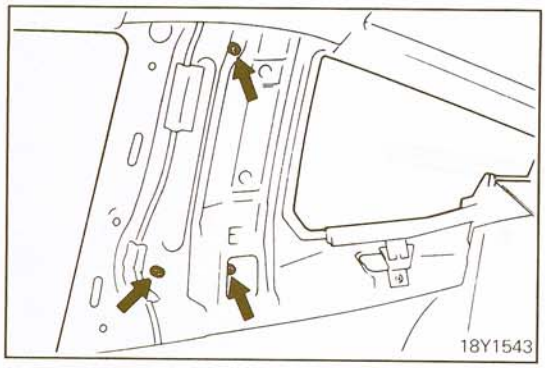

5. REMOVAL OF AIR OUTLET GARNISH

Remove the air outlet garnish mounting nuts, and then remove the garnish outward.

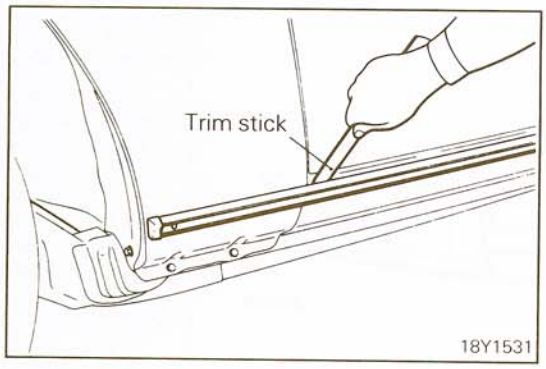

6. REMOVAL OF SKIRT MOULDING

Using the trim stick, remove the skirt moulding by prying at the clip positions.

WINDSHIELD AND QUARTER WINDOW

N23LAAG

GENERAL

The windshield glass is attached by an urethane-base adhesive to the window frame. This adhesive not only provides improved glass holding and sealing, but also permits use of body openings having a greater structural strength.

ADHESIVE KIT AND RESERVE ITEMS

Adhesive kit and reserve items	Applications	Quantity
Adhesive kit (Essex Chemical Corporation)		
Urethane adhesive (Essex Urethane "E" ... Auto Glass Sealant)		One cartridge
Dispensing nozzle		One
Glass blackout primer		As required
Dauber for applying blackout primer		One
Reserve items		
Wire (dia. x length)	for cutting adhesive	Five pieces of wire 0.6 x 1 mm (0.024 x 0.040 in.)
Adhesive gun	for adhesive application	One
Isopropyl alcohol	for cleaning jointing surfaces	As required
Wiping rags		As required
Window weatherstrip sealant (3M Adhesive EC-870)	for prevention of water leaks and gathering after adhesive application	As required
MEK (Methyl Ethyl Ketone) or Toluene		As required
Grow Chemical Solvent GS-35	for cleaning	As required
Glass holder		Two
Window moulding remover		One
Spacers (Service Part)		Two
Dam (Service Part)		As required
Tectyl 506T (Valvoline Oil Company)		As required

NOTE
MEK (Methyl Ethyl Ketone), Toluol (Toluene), Grow Chemical Solvent GS-35 can be obtained directly from a chemical house handling these chemicals.

WINDSHIELD INSTALLATION PROCEDURE

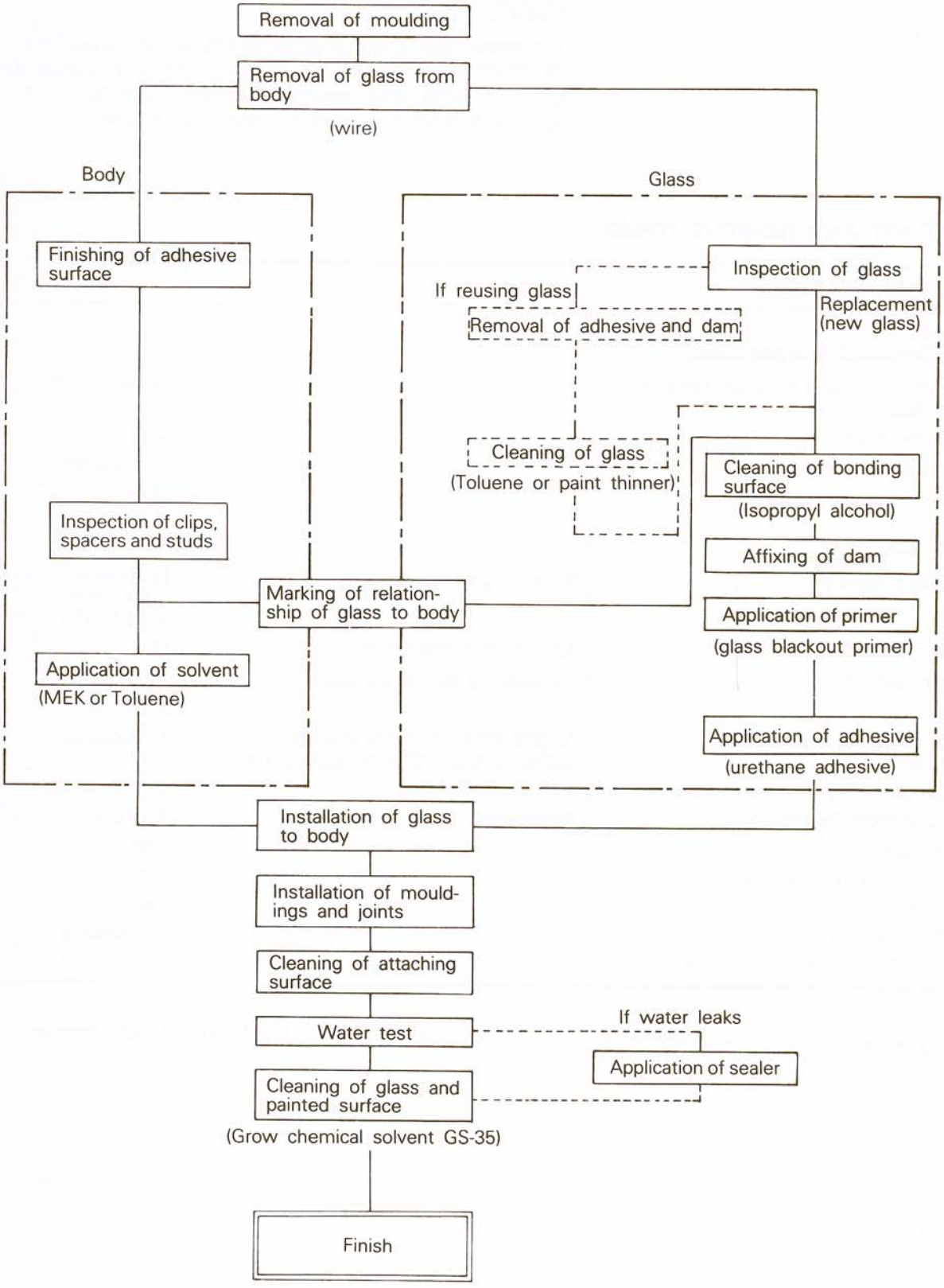

STB Revision

WINDSHIELD

N23LBAI

REMOVAL AND INSTALLATION

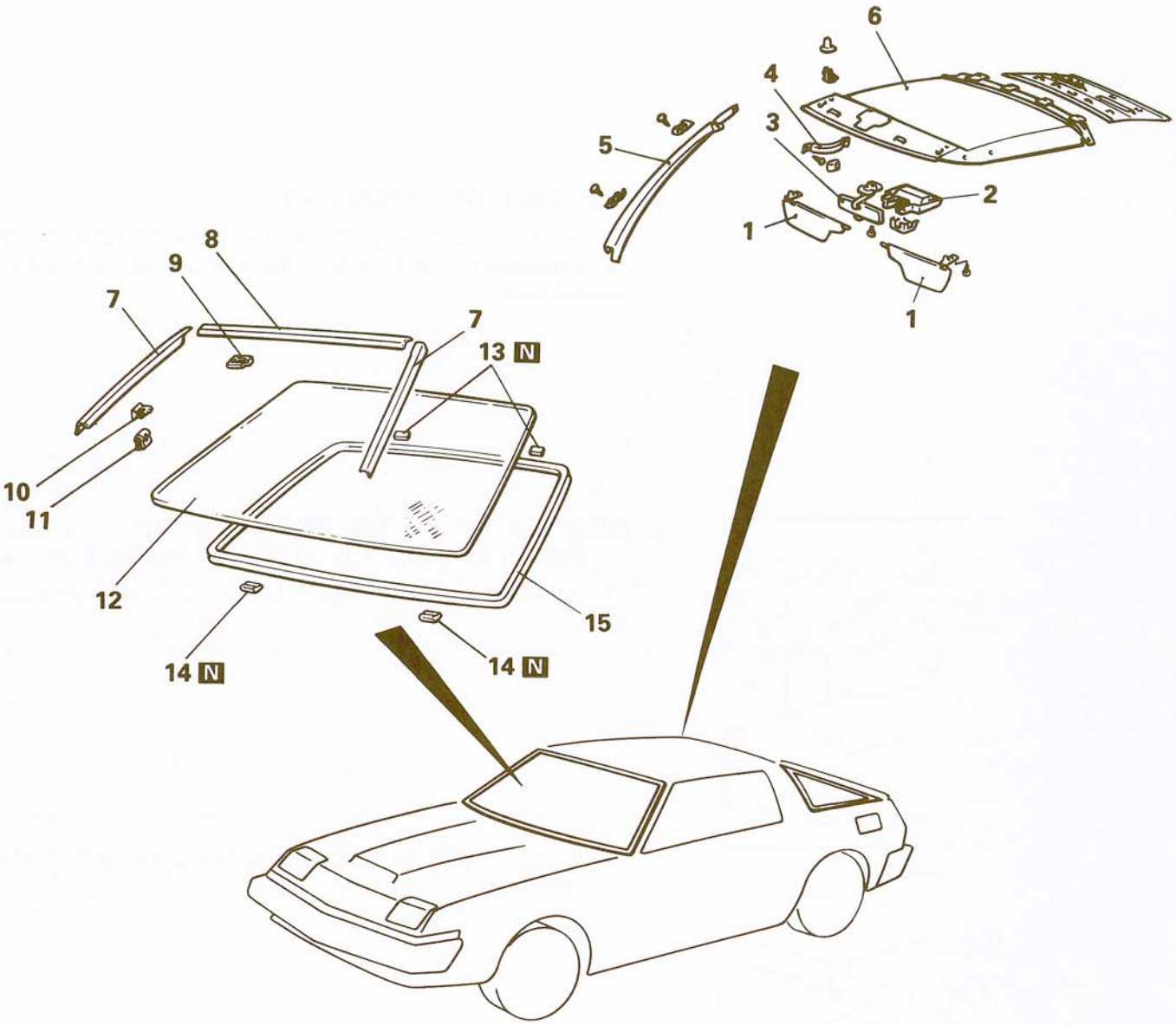

Removal steps

1. Sunvisor
2. Dome light assembly
3. Inside rearview mirror
4. Assist grip
5. ◆◆ Front pillar trim
6. ◆◆ Headlining
7. ◆◆ Front side moulding
8. ◆◆ Front upper moulding
9. ◆◆ Window moulding clip
10. Moulding retainer
11. Windshield moulding retainer
12. ◆◆ ▸◂ Windshield
13. ▸◂ Window glass spacer B
14. ▸◂ Window glass spacer A
15. ▸◂ Window dam

NOTE
(1) Reverse the removal procedures to reinstall.
(2) ◆◆: Refer to "Service Points of Removal".
(3) ▸◂: Refer to "Service Points of Installation".
(4) N: Non-reusable parts

18YA17

SERVICE POINTS OF REMOVAL

5. REMOVAL OF FRONT PILLAR TRIM

Refer to P.23-86.

6. REMOVAL OF HEADLINING

Remove the headlining from the roof panel to provide space for extending wire between the top and bottom edges of windshield.

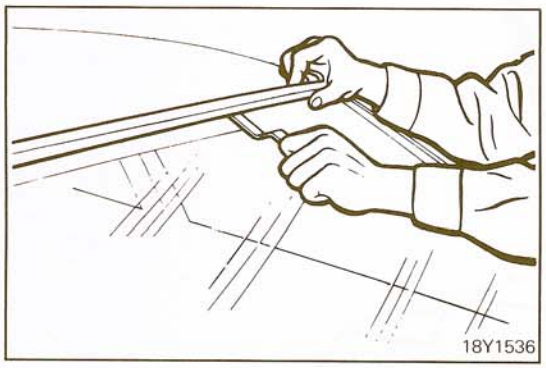

7. REMOVAL OF FRONT SIDE MOULDING / 8. FRONT UPPER MOULDING / 9. WINDOW MOULDING CLIP

(1) Remove the mouldings by using the moulding remover.

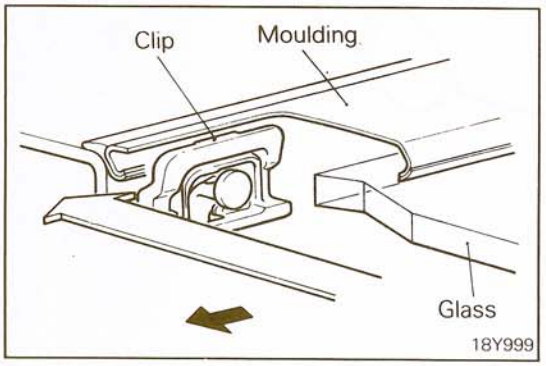

(2) Remove the moulding clips by using the moulding remover.

12. REMOVAL OF WINDSHIELD

(1) Using a sharp-pointed drill, make a hole in the adhesive area of the windshield.
Insert a wire through the hole from the inside.

Caution
Use cloth tape to protect the painted body surfaces.

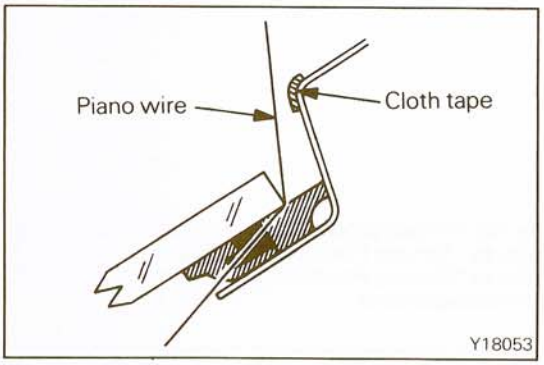

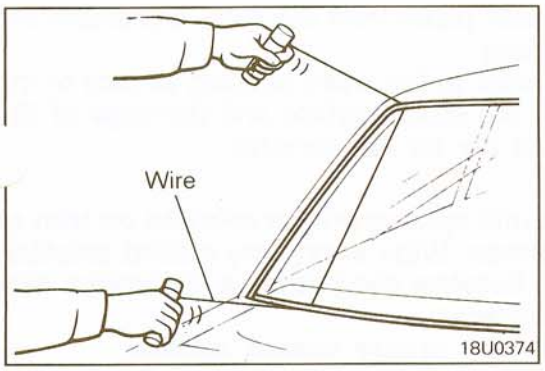

(2) From inside the vehicle, insert one end of wire through adhesive at the upper edge of the windshield.
(3) Insert the other end of wire from inside the vehicle through adhesive at the lower edge of the windshield.
(4) Secure each end of wire to a wooden handle or the like.
(5) Carefully cut through adhesive by pulling wire along the windshield from outside the vehicle in a sawing motion.

Caution
In order to protect the body from damage, apply cloth tape to all body areas around the installed glass before cutting the adhesive.

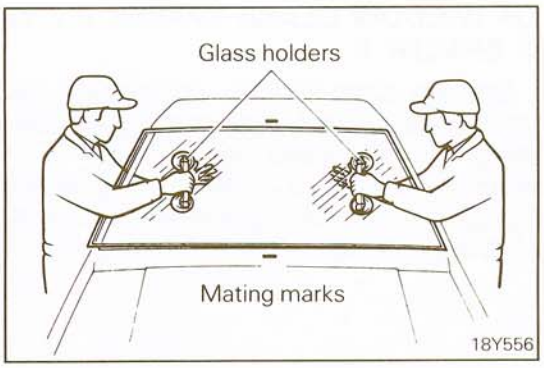

(6) Make mating marks on the glass and body if the glass is to be reinstalled.
(7) Take out the glass with glass holders.

NOTE
If the glass being removed is to be reinstalled, place it on a protected bench or holding fixture.

(8) Use a screwdriver or similar tool to pry up and remove the moulding clips.

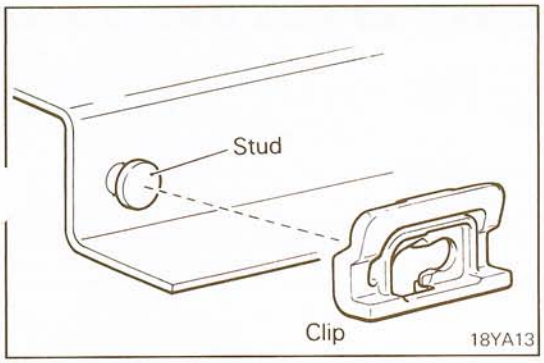

INSPECTION

Check the moulding clips and studs. Replace them if they are damaged.

NOTE
If a moulding clip stud has been broken, drill a hole of 3 mm (0.125 in.) in diameter in the stud, apply specified sealant to this hole, and then install the moulding clip with a self-tapping screw.

Specified sealant: 3M ART Part No. 8513, 8509 or 3M Adhesive EC-5502, EC-5562 or equivalent

Caution
After installing the clip, apply antirust solvent to the screw head and the clip to protect them from rust.

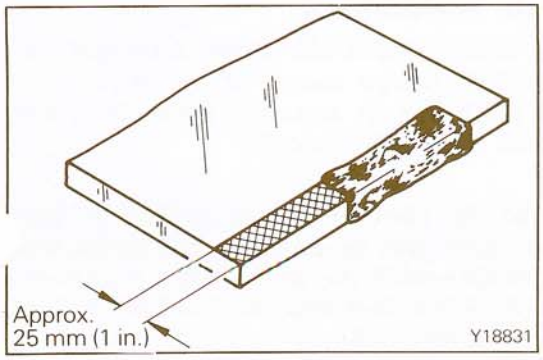

SERVICE POINTS OF INSTALLATION

15. INSTALLATION OF WINDOW DAM

(1) Wipe surface of glass to which bead of adhesive will be applied [within 25 mm (1 in.) from the edge of glass] with a cloth dampened in isopropyl alcohol.

Caution
Do not touch surfaces that have been degreased with isopropyl alcohol.

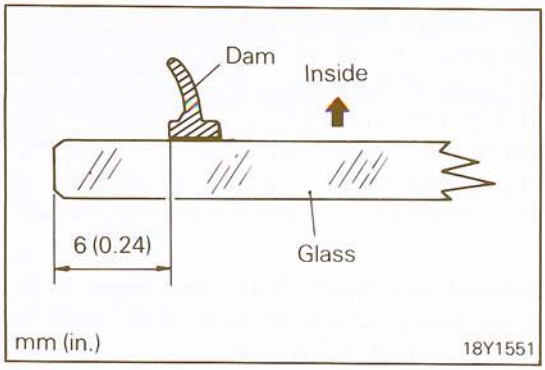

(2) Remove the back paper from the dam, and attach the dam to the glass.
(3) Apply glass primer to the entire bonding surface of the glass, both to the inside surface and the edge of the glass. Allow to dry for ten minutes.

Caution
Use care to avoid spilling primer solution on trim or a painted surface. Wipe away any spilled solution immediately, because the primer will damage trim or painted surfaces.
Do not touch the primer coated surface.

14. INSTALLATION OF WINDOW GLASS SPACER A / 13. WINDOW GLASS SPACER B

(1) Using a clean lint-free cloth liberally dampened with solvent (MEK or Toluene), briskly rub over old adhesive material remaining on pinch-weld flange.
(2) Cut off an amount from spacers A and B equal to the thickness of the adhesive remaining [within 2 mm (0.08 in.)] on the pinch-weld flange.

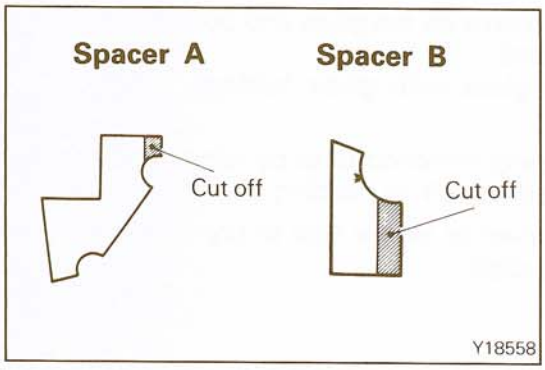

(3) Attach the spacers in the proper directions on the flange.

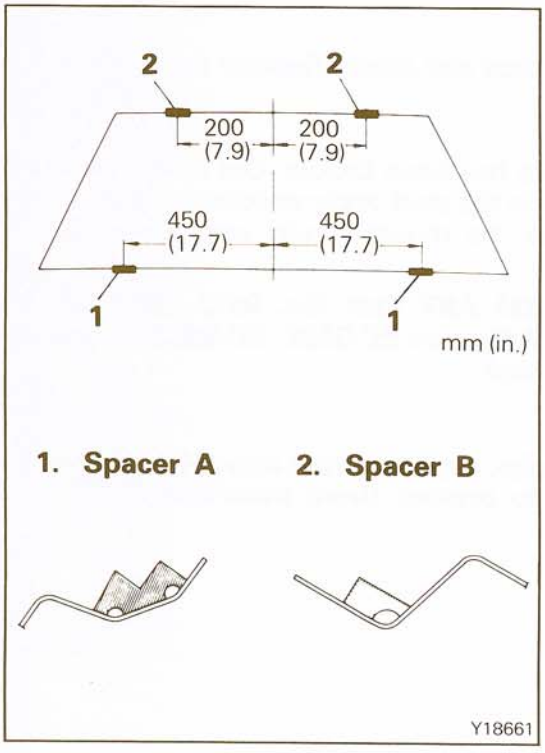

12. INSTALLATION OF WINDSHIELD

(1) Using a sharp knife, remove old adhesive on the body opening pinch-weld flange evenly to a thickness of within 2 mm (0.08 in.) all around. Finish the flange surfaces so that they are smooth.

Caution
Be careful not to remove more adhesive than necessary, and also not to damage the paintwork on the body surface with the knife. If the paintwork is damaged, repair the damaged area with touch-up paint or anti-rust solvent.

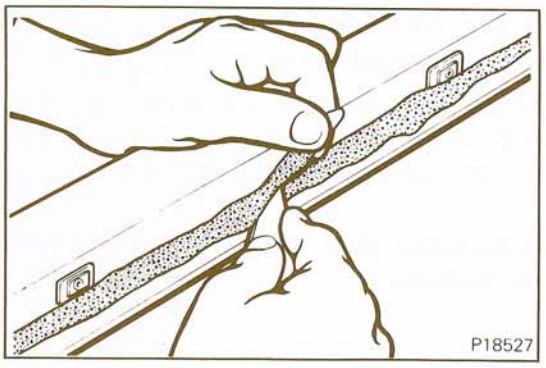

STB Revision

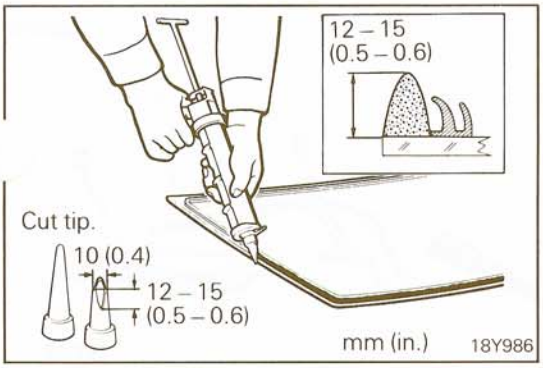

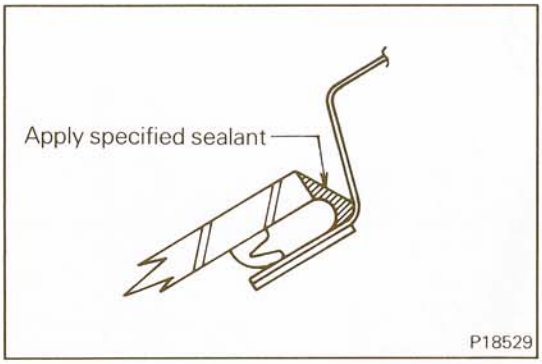

(2) With an adhesive gun, apply the specified adhesive to the entire windshield mounting surface along the dam.

Specified adhesive: Urethane adhesive (Essex Urethane "E" ... Auto Glass Sealant)

NOTE
Cut the nozzle tip into a V shape to facilitate adhesive application. Adhesive material begins to cure after fifteen minutes when exposed to air.

(3) Using a glass holder, place the glass on the body opening.
Press the glass gently so that no adhesive appears.

Caution
Do not move the glass after installing it to the body. Place the glass in the previously marked position. Use care not to close the water groove (in the lower corner of the pinch-weld flange) with adhesive.

(4) Wipe away excess adhesive from the glass.
(5) Test for water leakage.
(6) If there is leakage, fill the leaking area with specified sealant.

Specified sealant: 3M Adhesive EC-870

Caution
Do not apply water directly to the bonded area.

(7) Install the clips to the body.
(8) Apply tectyl to the clips.
(9) Attach the mouldings to the clips by tapping.

QUARTER WINDOW

N23LEAD

REMOVAL AND INSTALLATION

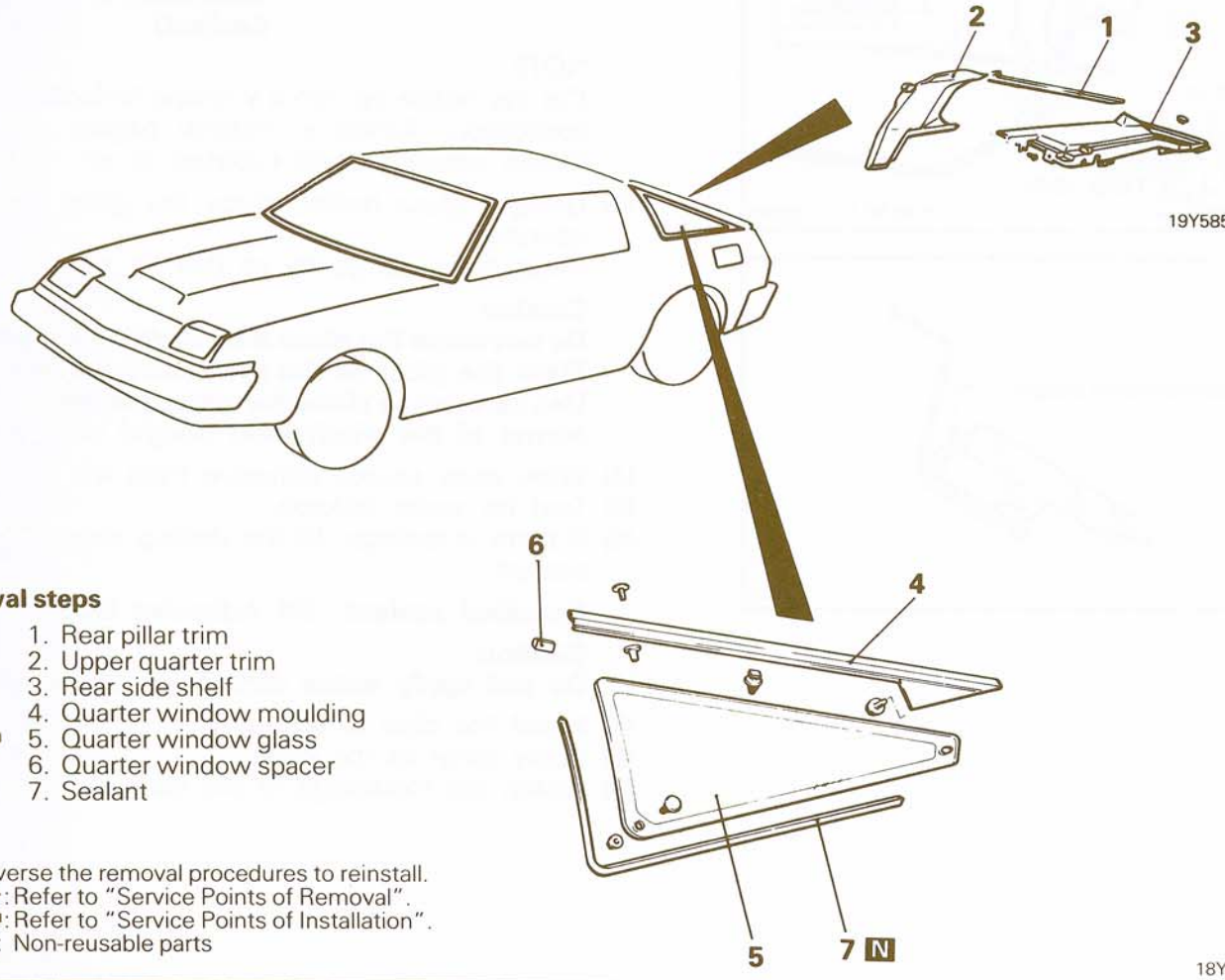

Removal steps

1. Rear pillar trim
2. Upper quarter trim
3. Rear side shelf
4. ◆◆ Quarter window moulding
5. ◆◆ Quarter window glass
6. Quarter window spacer
7. Sealant

NOTE
(1) Reverse the removal procedures to reinstall.
(2) ◆◆: Refer to "Service Points of Removal".
(3) ◆◆: Refer to "Service Points of Installation".
(4) N: Non-reusable parts

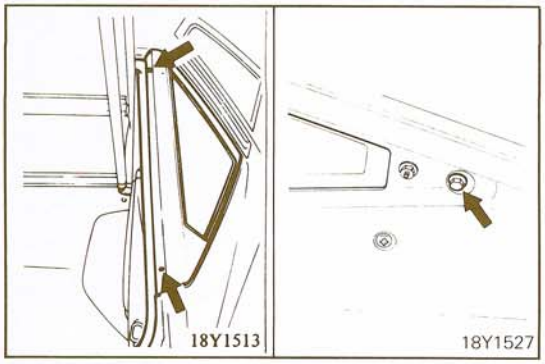

SERVICE POINT OF REMOVAL

4. REMOVAL OF QUARTER WINDOW MOULDING

(1) Open the hatch.
(2) Remove the quarter window moulding mounting screws and bolt.

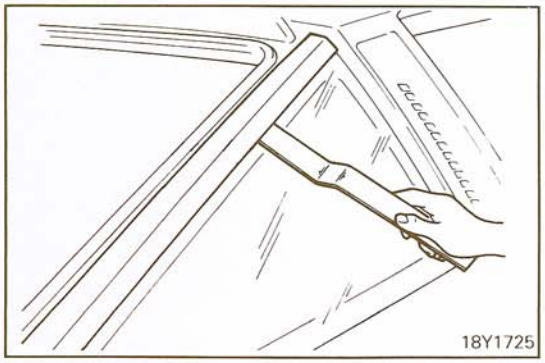

(3) With the moulding remover, remove the quarter window moulding by prying at the clip position of the quarter window moulding.

Caution
Be careful not to scratch the painted surface of the body.

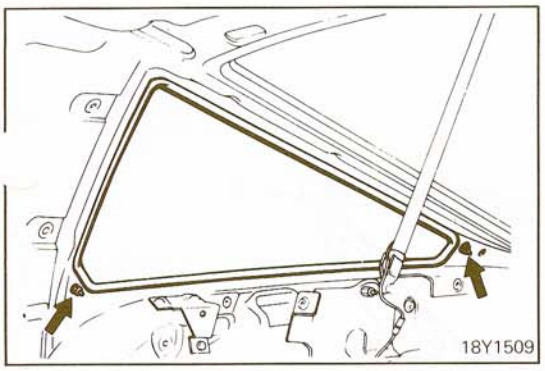

(4) Remove the quarter window mounting bolts.
(5) Cut the butyl tape and remove the quarter window glass.

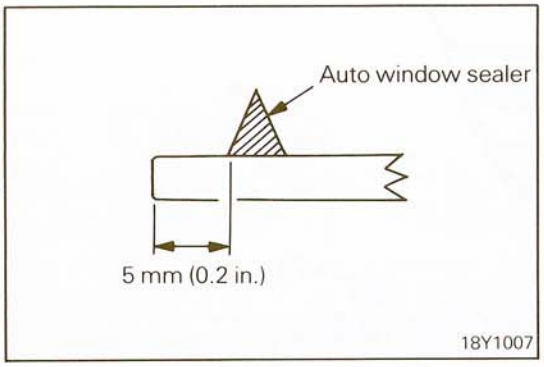

SERVICE POINT OF INSTALLATION

5. APPLICATION OF ADHESIVE TO QUARTER WINDOW GLASS

When the window glass is installed, apply the specified adhesive all around the circumference of the inside of the glass.

Specified adhesive: Urethane adhesive (Essex Urethane "E" ... Auto Glass Sealant

DOOR ASSEMBLY

N23MAAK

REMOVAL AND INSTALLATION

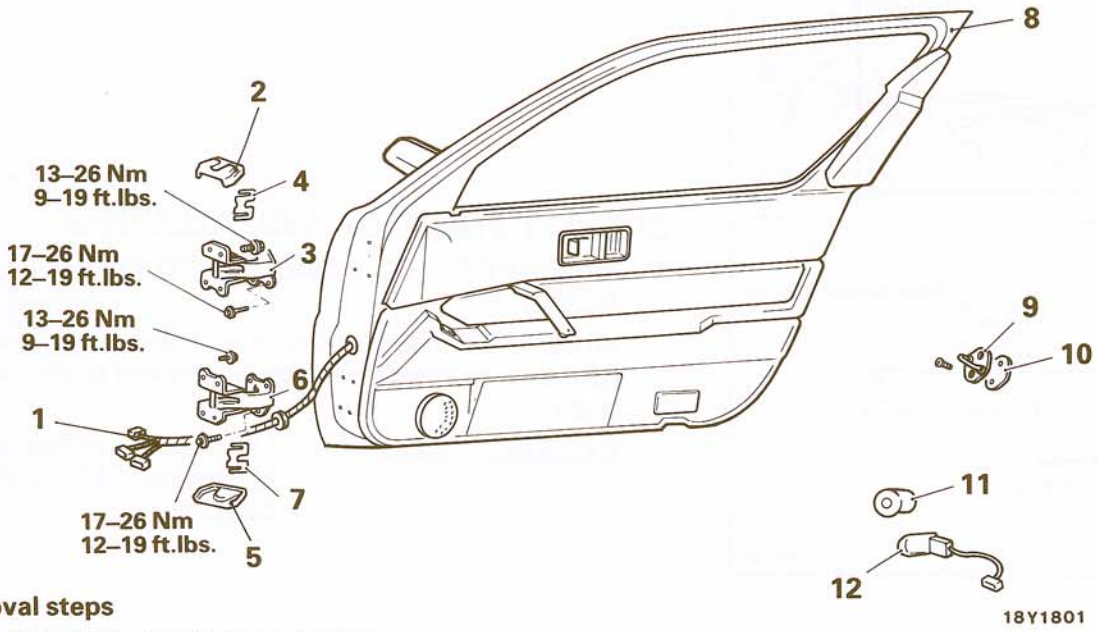

Door removal steps

1. Door wiring harness connection
2. Upper hinge cover
3. ◆◆ Door upper hinge
4. Door upper hinge shim
5. Lower hinge cover
6. ◆◆ Door lower hinge
7. Door lower hinge shim
8. Door

Striker removal steps

9. Striker
10. Striker shim

Door switch removal steps

11. Door opening switch cap
12. Door switch

NOTE
(1) Reverse the removal procedures to reinstall.
(2) ◆◆: Refer to "Service Points of Installation".

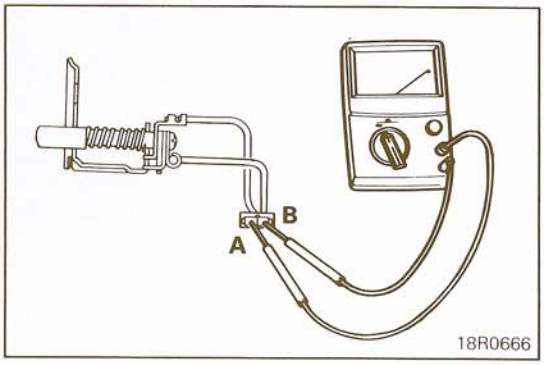

INSPECTION

DOOR SWITCH

Operate the switch, and check the continuity between the terminals.

Switch \ Test probe	A	B
Release	○———	———○
Push		

NOTE
○–○ indicates that there is continuity between the terminals.

- Cracks, damage, or abnormal noise of door hinges
- Looseness of door hinge attaching bolts
- Damage or deformation of door panel

STB Revision

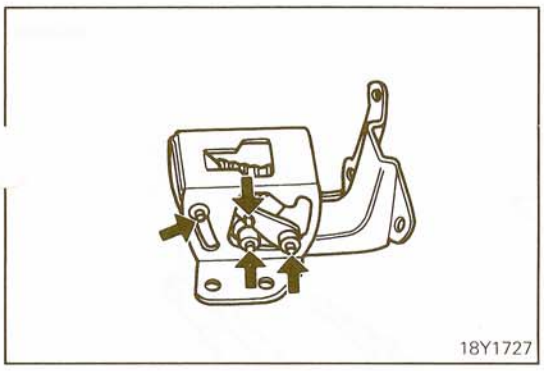

SERVICE POINT OF INSTALLATION

6. REMOVAL OF DOOR LOWER HINGE / 3. DOOR UPPER HINGE

Apply specified grease to the door hinge sliding portions.

Specified grease: Multipurpose grease SAE J310, NLGI No. 0 or equivalent

DOOR TRIM

N23MBAI

REMOVAL AND INSTALLATION

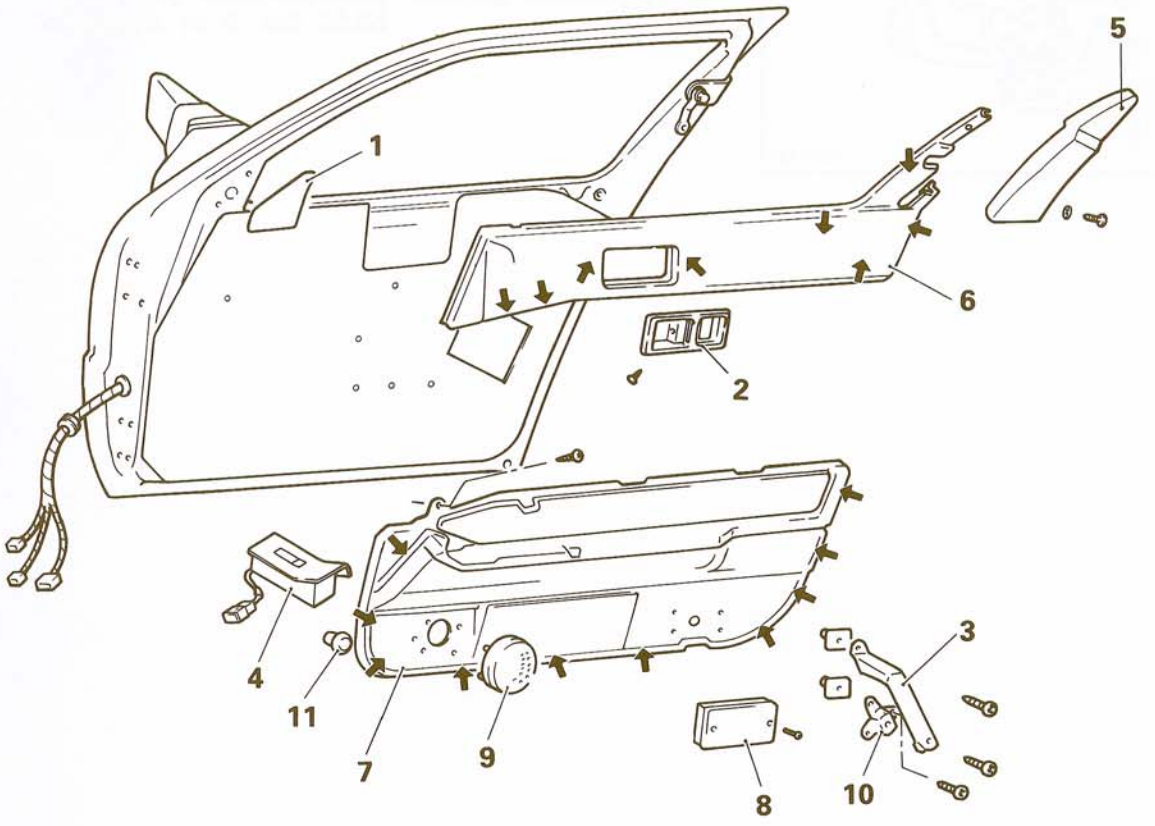

18Y1802

Removal steps

1. Door corner trim
2. Inside handle cover
3. Door grip
4. Power window switch
5. ◆◆ Door sash trim
6. ◆◆ Door upper trim
7. ◆◆ Door lower trim
8. Door light
9. Speaker garnish
10. Door grip bracket
11. Trim clips

NOTE
(1) Reverse the removal procedures to reinstall.
(2) ◆◆: Refer to "Service Points of Removal".
(3) ◆ denotes clip position

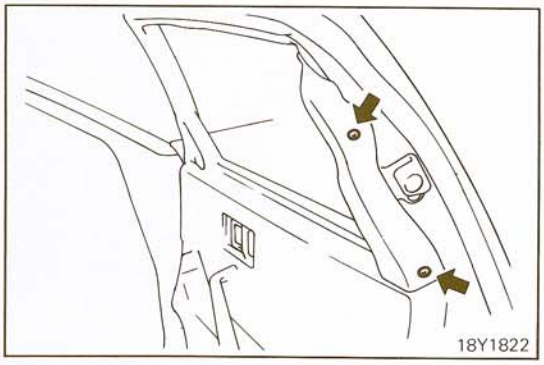

18Y1822

SERVICE POINTS OF REMOVAL

5. REMOVAL OF DOOR SASH TRIM

Remove the front door sash trim mounting screws, and then remove the trim by pulling it upward.

STB Revision

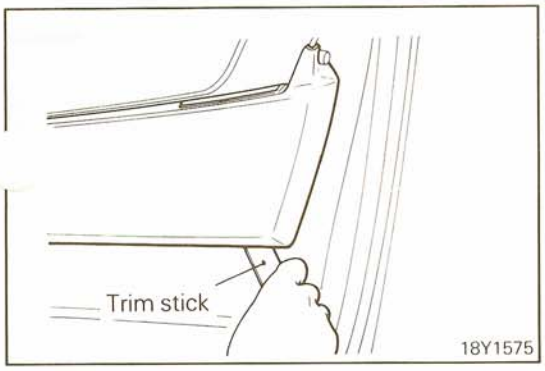

6. REMOVAL OF DOOR UPPER TRIM

Remove the clips with the trim stick.
From the outside of the vehicle, remove the trim by pulling it upward while holding the sheet-metal part of the door upper trim.

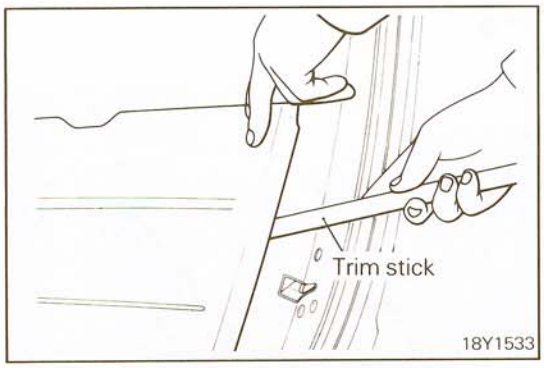

7. REMOVAL OF DOOR LOWER TRIM

Remove the clips from the edge of the door lower trim by using the trim stick.

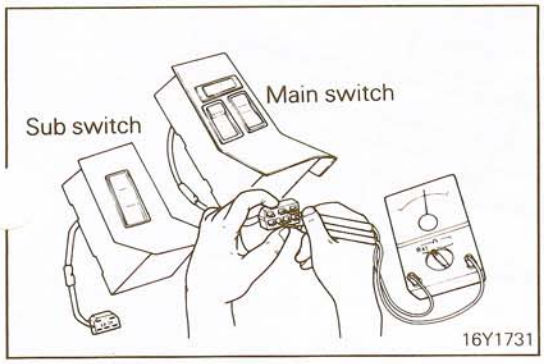

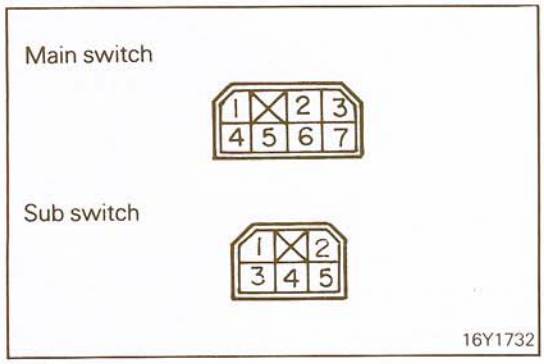

INSPECTION

POWER WINDOW SWITCH

Operate the switch, and check for continuity between the terminals.

MAIN SWITCH

Terminal / Switch	Lock switch 2	Lock switch 5	Terminal / Switch	Driver's window switch 2	Driver's window switch 1	Driver's window switch 4	Driver's window switch 6	Passenger's window switch 2	Passenger's window switch 3	Passenger's window switch 7	Passenger's window switch 6
NORMAL	○—○		UP	○—○	○—○	○—○		○—○		○—○	
			OFF		○—○	○—○	○—○		○—○	○—○	○—○
			DOWN	○—○	○—○		○—○	○—○	○—○		○—○
LOCK			UP	○—○	○—○	○—○				○—○	
			OFF		○—○	○—○	○—○		○—○	○—○	○—○
			DOWN	○—○	○—○		○—○		○—○		○—○

SUB SWITCH

Switch / Terminal	1	2	4	5	6
UP	○—○		○—○	○—○	○—○
OFF	○—○	○—○	○—○		○—○
DOWN	○—○	○—○	○—○	○—○	

STB Revision

FRONT DOOR GLASS AND REGULATOR

N23MCAI

REMOVAL AND INSTALLATION

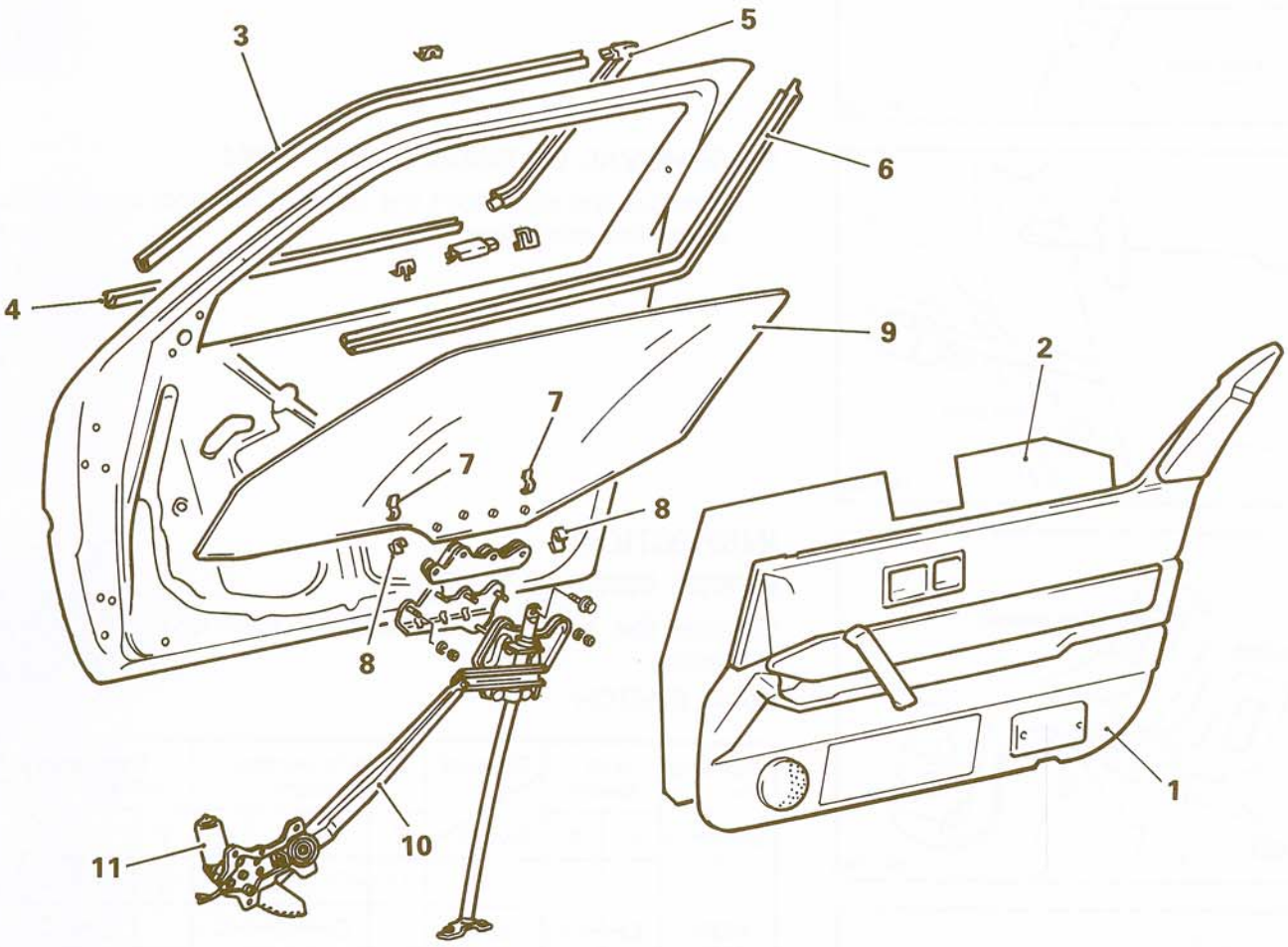

18Y1804

Removal steps

- ◆◆ 1. Door trim
- ◆◆ ◆◆ 2. Waterproof film
- ◆◆ 3. Door drip moulding
- ◆◆ 4. Door belt moulding
- ◆◆ 5. Door window rear sash moulding
- 6. Door belt inside weatherstrip
- ◆◆ 7. Door glass stabilizer (inner)
- ◆◆ 8. Door glass stabilizer (outer)
- ◆◆ ◆◆ 9. Front door glass
- ◆◆ ◆◆ 10. Power window regulator
- ◆◆ 11. Power window motor

NOTE
(1) Reverse the removal procedures to reinstall.
(2) ◆◆: Refer to "Service Points of Removal".
(3) ◆◆: Refer to "Service Points of Installation".

SERVICE POINTS OF REMOVAL

1. REMOVAL OF DOOR TRIM

Refer to P.23-52.

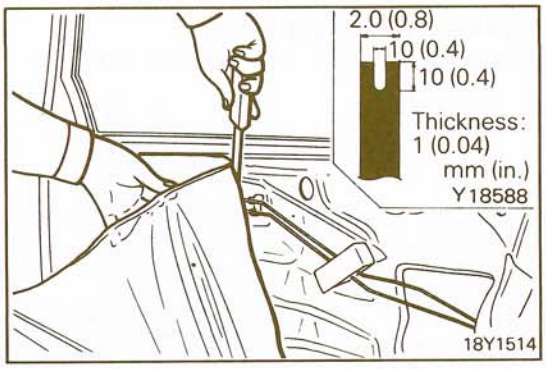

2. REMOVAL OF WATERPROOF FILM

Cut away the non-drying adhesive around the waterproof film with a cutter or similar tool.

Caution
If the clip for the door trim is still in the mounting hole in the body, remove it with the tool shown in the illustration.

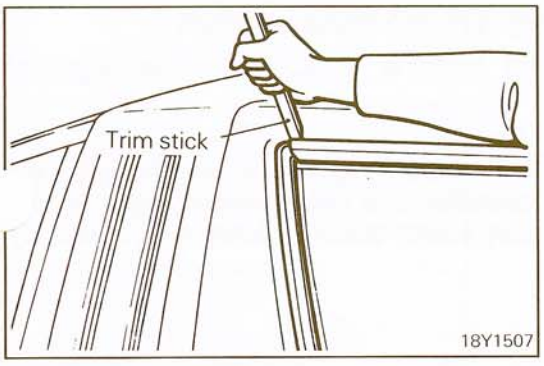

3. REMOVAL OF DOOR DRIP MOULDING / 4. DOOR BELT MOULDING / 5. DOOR WINDOW REAR SASH MOULDING

Insert the trim stick at the position of the moulding clips, and then pry the mouldings to remove them in the following order:
(1) Door drip moulding
(2) Door belt moulding
(3) Door window rear sash moulding

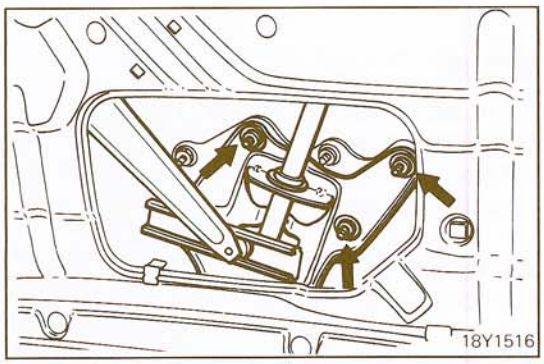

9. REMOVAL OF FRONT DOOR GLASS

(1) Turn on the ignition switch and operate the windows. Be sure to turn the ignition switch off after finishing.
(2) Remove the door glass stabilizer.
(3) Remove the glass mounting nuts.
(4) Pull the glass upward and remove it.

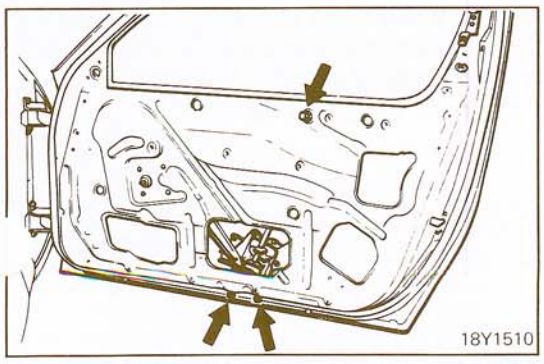

10. REMOVAL OF POWER WINDOW REGULATOR

(1) Remove the door glass guide.

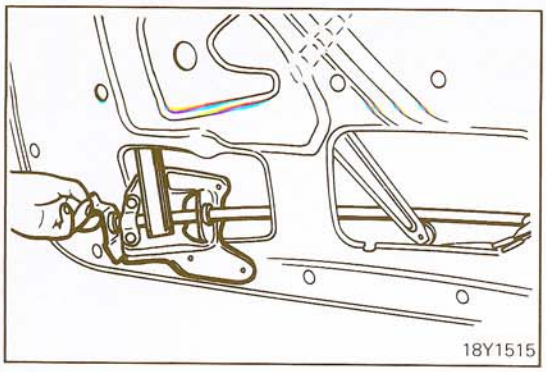

(2) Remove the door glass guide through the access hole while moving the lower edge of the guide forward.
(3) Remove the motor connector.

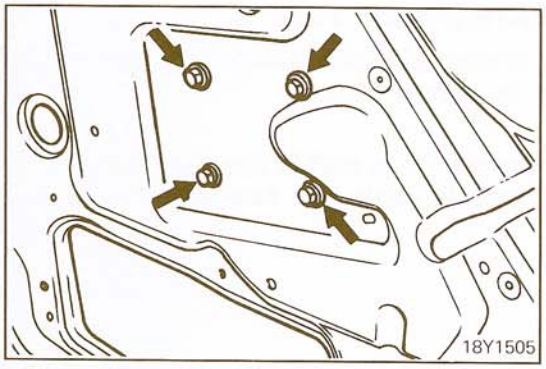

(4) Remove the regulator mounting bolts.
(5) Remove the regulator through the access hole.

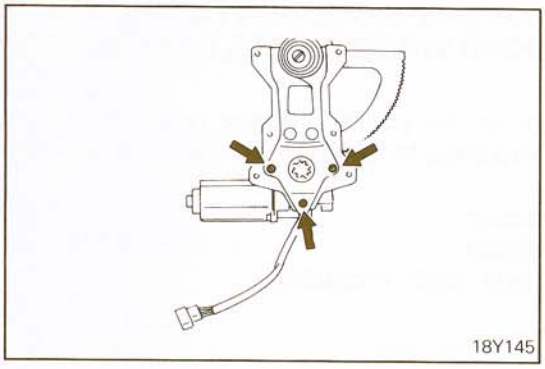

11. REMOVAL OF POWER WINDOW MOTOR

Remove the power window motor from the regulator assembly.

Caution
When loosening the connecting screws of the regulator and the motor assembly, the compressed force of the regulator spring may cause the regulator arm to spring up.

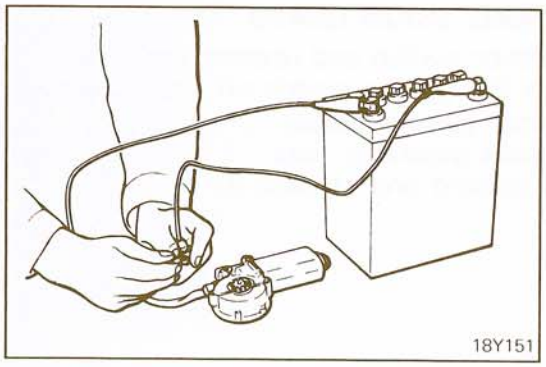

INSPECTION

POWER WINDOW MOTOR

(1) Remove the power window motor and regulator.
(2) Connect the motor terminals directly to the battery and check that the motor operates smoothly. Next, reverse the polarity and check that the motor operates smoothly in the reverse direction.
To check the circuit breaker built in the motor, install the motor and regulator to the body and then proceed as follows:
① Press the UP switch to wide open the door window glass and hold down the switch for about 10 seconds. Upon releasing the UP switch, press the DOWN switch.
② The circuit breaker is judged good if the door window glass starts to open in 60 seconds or less.

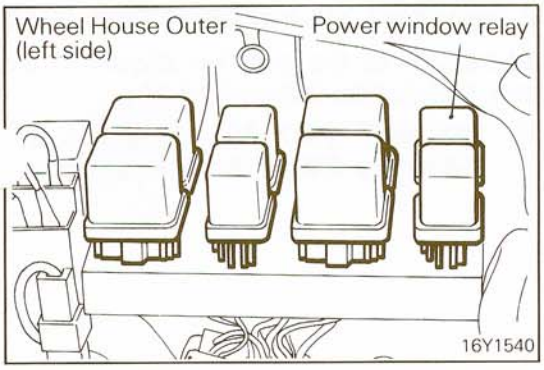

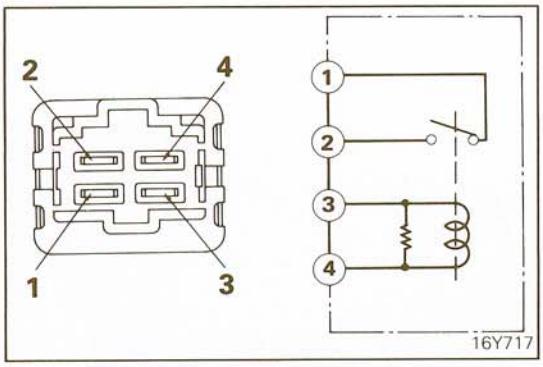

POWER WINDOW RELAY

(1) Remove the power window relay, and connect an ohmmeter to the relay side connector.
(2) Check for continuity between the terminals with the power ON and OFF.

While power is OFF
Between terminals 1 – 2 ..... no continuity
Between terminals 3 – 4 ..... continuity
While powr is ON
Between terminals 1 – 2 ..... continuity

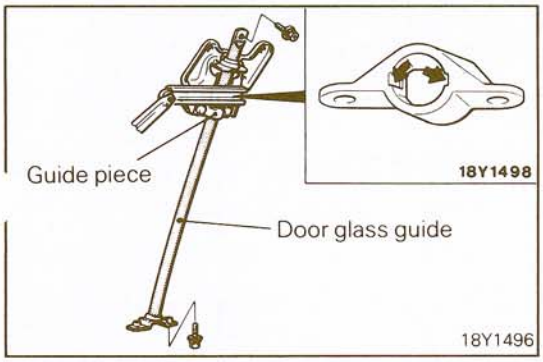

SERVICE POINTS OF INSTALLATION

10. APPLICATION OF GREASE TO POWER WINDOW REGULATOR

Apply the specified grease to the door glass guide and guide piece.

Specified grease: Multipurpose grease SAE J310, NLGI No. 2 or equivalent

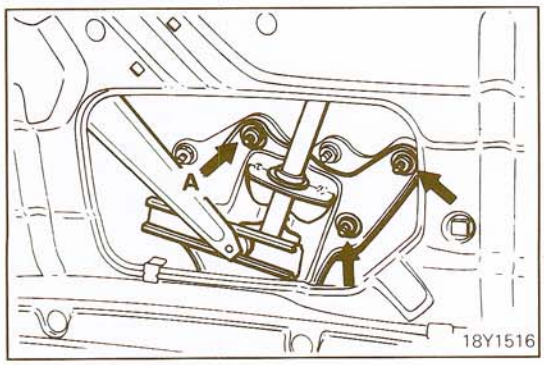

9. INSTALLATION OF FRONT DOOR GLASS

(1) Lower the power window regulator until the door glass and regulator installation point is visible through the service hole.
(2) Install the door glass to the power window regulator and temporarily tighten the nuts.
(3) Loosely tighten nuts A.
(4) After making the adjustment of the door glass tilt, tighten nuts A.

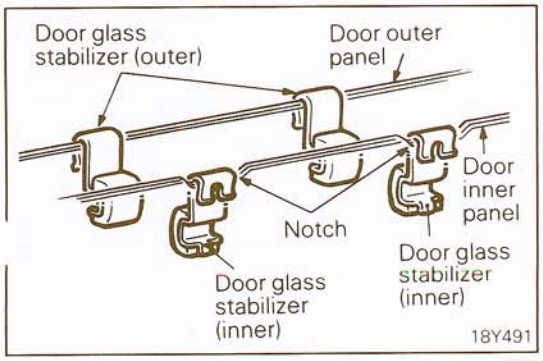

8. INSTALLATION OF DOOR GLASS STABILIZER (OUTER) / 7. DOOR GLASS STABILIZER (INNER)

Install the door glass stabilizers to the door panel at the positions shown in the illustration.

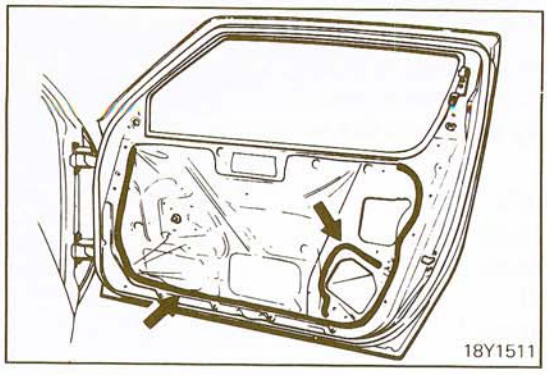

2. APPLICATION OF SEALANT TO WATERPROOF FILM

Apply the specified sealant at the position shown in the illustration, and then attach the waterproof film.

Specified sealant: 3M ART Part No. 8626 or 3M Adhesive EC-5310 or equivalent

FRONT DOOR HANDLE AND LATCH

N23MDAG

REMOVAL AND INSTALLATION

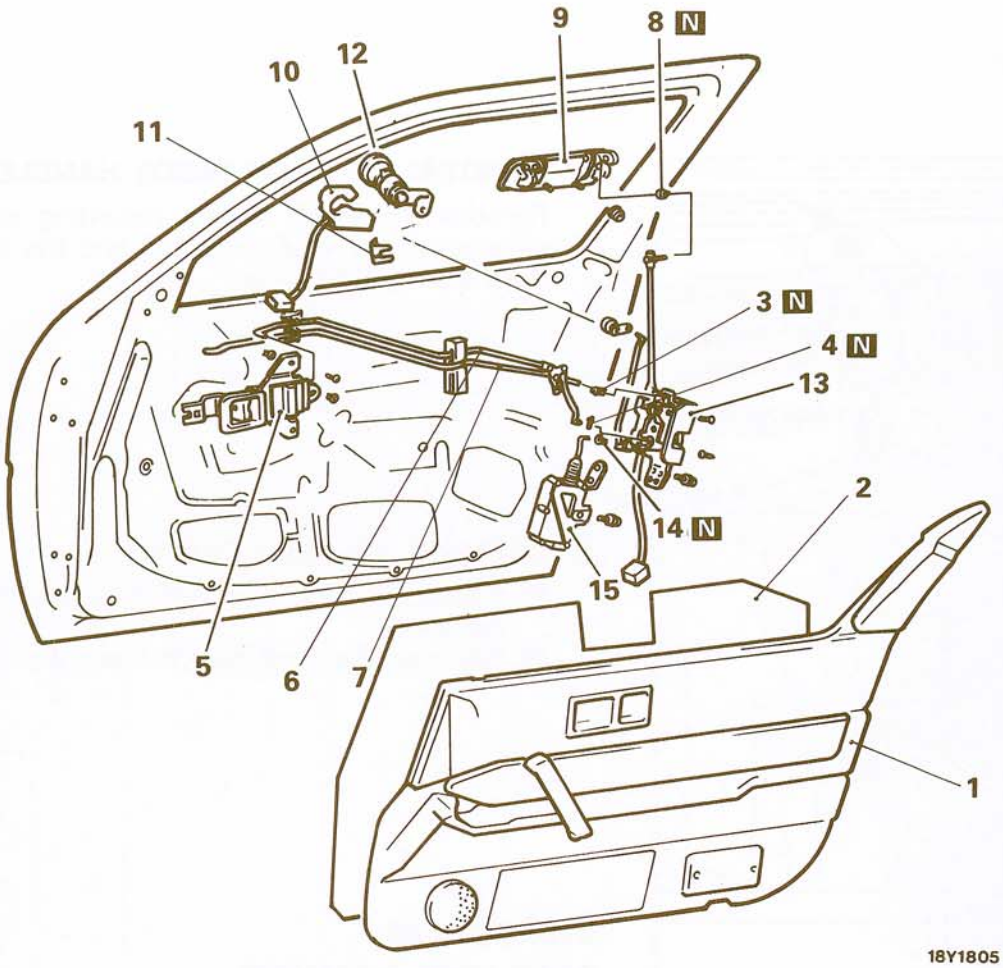

Removal steps

- ◆◆ 1. Door trim
- ◆◆ 2. Waterproof film
- 3. Rod snap
- 4. Rod snap
- ◆◆ 5. Door inside handle
- 6. Inside lock rod
- 7. Inside handle rod
- 8. Rod snap
- 9. Door outside handle
- ◆◆ ◆◆ 10. Reed switch
- 11. Lock cylinder retainer
- ◆◆ 12. Key cylinder
- ◆◆ 13. Door latch (with door lock switch)
- ◆◆ 14. Rod snap
- ◆◆ 15. Door lock actuator

NOTE
(1) Reverse the removal procedures to reinstall.
(2) ◆◆: Refer to "Service Points of Removal".
(3) ◆◆: Refer to "Service Points of Installation".
(4) N: Non-reusable parts

SERVICE POINTS OF REMOVAL

1. REMOVAL OF DOOR TRIM

Refer to P.23-52.

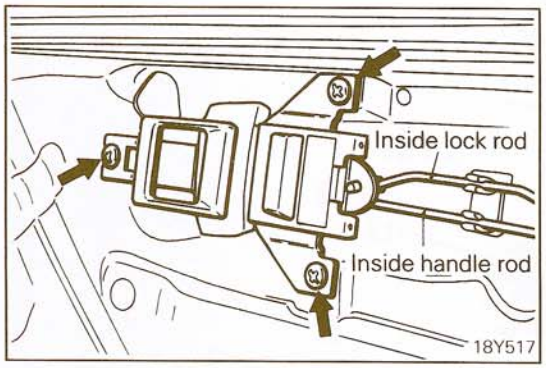

5. REMOVAL OF DOOR INSIDE HANDLE

Remove the inside handle mounting screws, and then disconnect the inside lock rod and the inside handle rod from the inside handle.

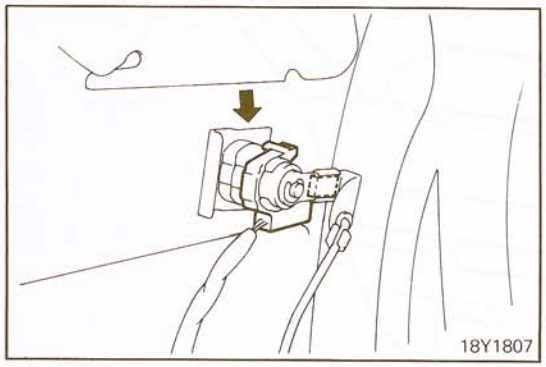

10. REMOVAL OF REED SWITCH

(1) Disconnect the reed switch connector from the door harness.
(2) Remove the reed switch from the key cylinder.

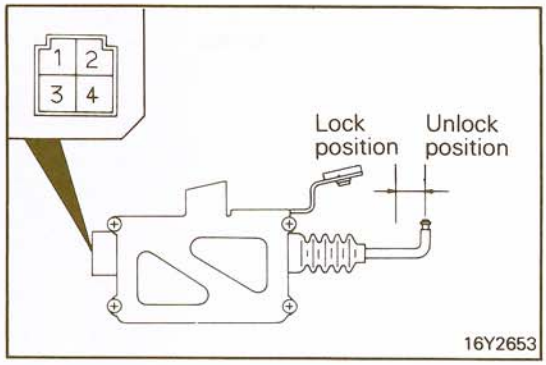

INSPECTION

DOOR LOCK ACTUATOR

(1) Remove the door lock actuator from the door panel.
(2) The actuator switch circuit is functioning properly if continuity exists between actuator connector terminals (2) and (4) while the actuator plunger is out (while the door lock actuator switch is OFF), and ceases to exist when the plunger goes in (when the door lock actuator switch becomes ON).
(3) Connect the battery source to the actuator terminals (1) and (3), and check the shaft for operation. If the shaft moves in opposite direction when the connection polarity is changed, the actuator should be considered to be in normal condition.

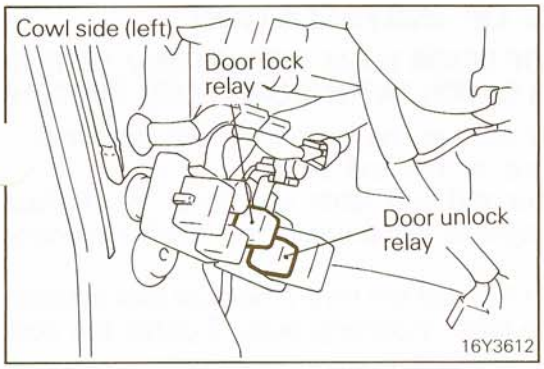

DOOR LOCK RELAY AND DOOR UNLOCK RELAY

(1) Remove the door lock relay and door unlock relay and connect an ohmmeter to the relay side connector.
(2) Check the continuity between the terminals.

Condition \ Terminal	1	2	3	4	5	6
When de-energized	○	○	○	○		
When energized		⊕	○	⊖	○	

NOTE
(1) ○–○ indicates that there is continuity between the terminals.
(2) ⊕---⊖ indicates power supply connection.

Caution
The battery voltage should not be applied for longer than one minute.

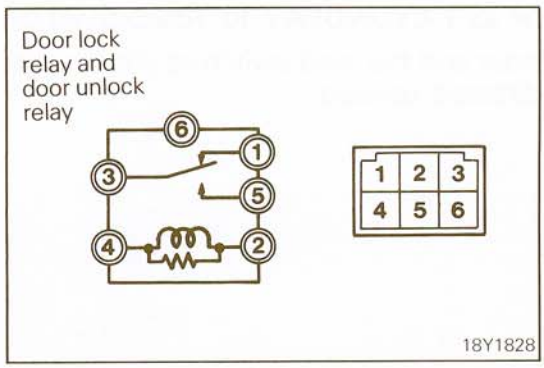

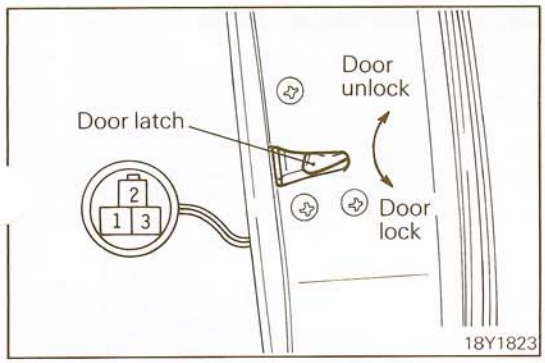

DOOR LOCK SWITCH

(1) With the latch placed at the lock and unlock positions, check for continuity.

Condition \ Terminal	1	2	3
Door unlock	○	○	
Door lock		○	○

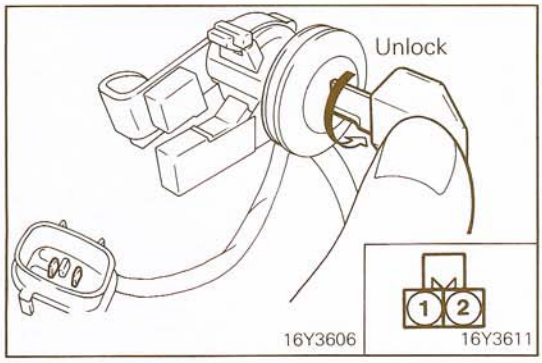

DOOR KEY CYLINDER UNLOCK SWITCH

(1) Unlock the lock cylinder by turning the key.
(2) Check the continuity between the terminals.

Condition \ Terminal	1	2
Door lock cylinder locked		
Door lock cylinder unlocked	○	○

NOTE
○–○ indicates that there is continuity between the terminals.

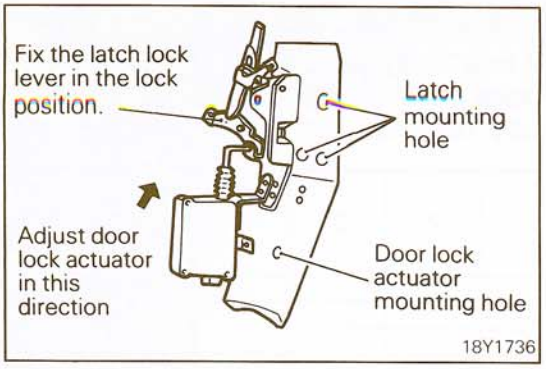

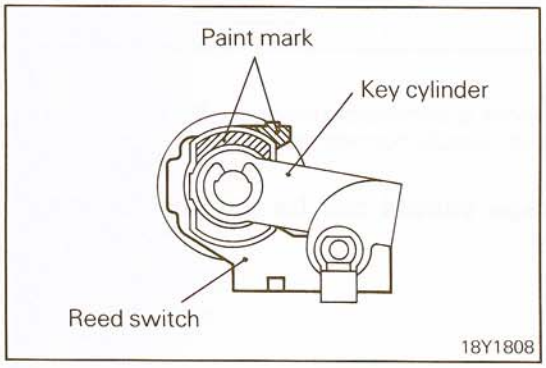

SERVICE POINTS OF INSTALLATION

15. INSTALLATION OF DOOR LOCK ACTUATOR / 14. ROD SNAP /13. DOOR LATCH (WITH DOOR LOCK SWITCH)

(1) Mount the rod snap in the latch lock lever and mou the actuator rod to the rod snap.
(2) Fix the actuator rod and latch lock lever in the lock position and tighten temporarily the latch mounting bolts.
(3) Lightly force up (toward the lever) the door lock actuator and tighten the latch mounting bolts. Tighten the door lock actuator mounting bolts.

12. INSTALLATION OF KEY CYLINDER / 10. REED SWITCH

Install the key cylinder and the reed switch as shown with their paint mark directed upward.

2. INSTALLATION OF WATERPROOF FILM

Refer to P.23-54.

FRONT DOOR WEATHERSTRIP

N23MEAI

REMOVAL AND INSTALLATION

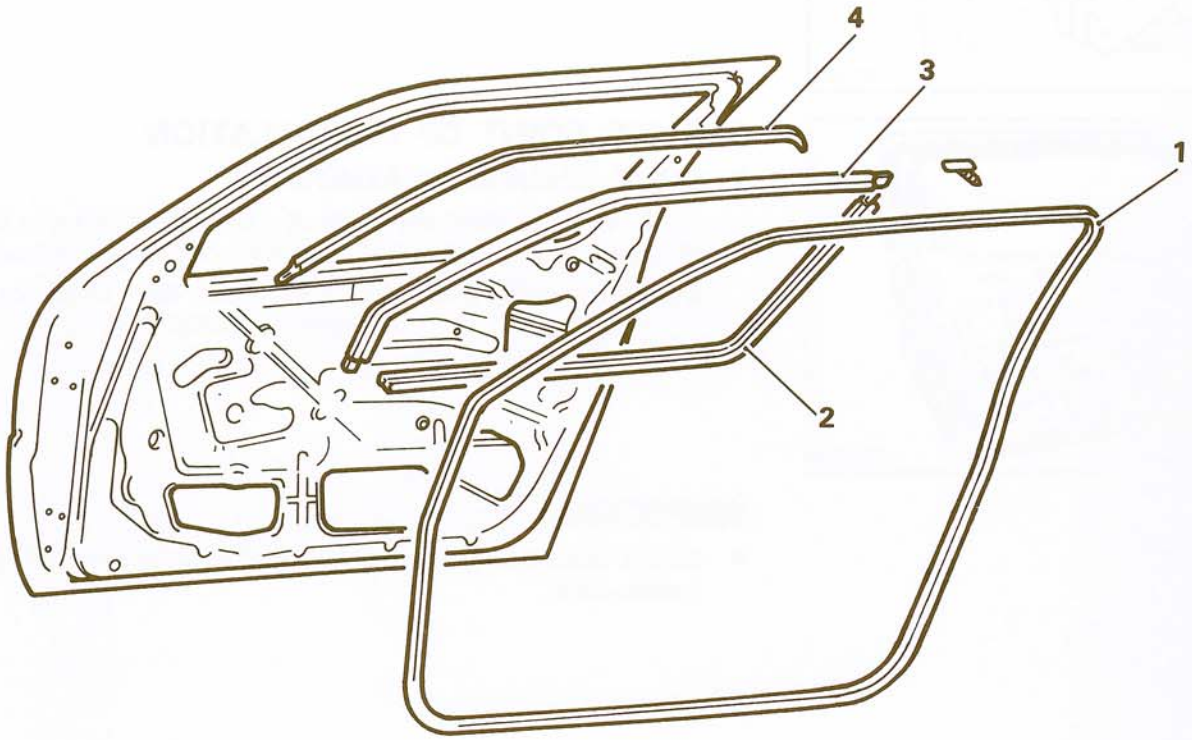

Removal steps

◆◆ ▶◀ 1. Door opening weatherstrip
◆◆ 2. Door belt inside weatherstrip
3. Door sash inside weatherstrip
4. Door drip weatherstrip

NOTE
(1) Reverse the removal procedures to reinstall.
(2) ◆◆: Refer to "Service Points of Removal".
(3) ▶◀: Refer to "Service Points of Installation".

18Y1737

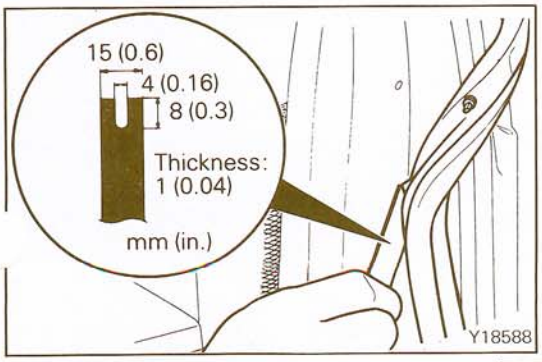

SERVICE POINTS OF REMOVAL

1. DOOR OPENING WEATHERSTRIP

Remove the door opening weatherstrip by using the tool shown in the illustration.

STB Revision

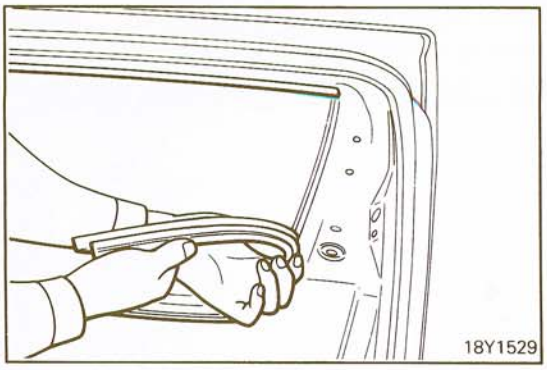

2. DOOR BELT INSIDE WEATHERSTRIP

Remove the door sash inside weatherstrip and the door belt inside weatherstrip by hand.

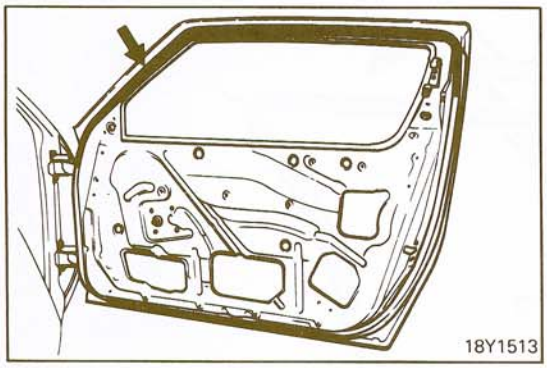

SERVICE POINT OF INSTALLATION

1. DOOR OPENING WEATHERSTRIP

Apply the specified adhesive at the position shown in the illustration, and then attach the door opening weatherstrip.

Specified adhesive: 3M ART Part No. 8626 or 3M Adhesive EC-5310 or equivalent

INSPECTION

- Check door inside handle and latch for wear, damage or malfunction.

DOOR MIRROR

N23QAAD

REMOVAL AND INSTALLATION

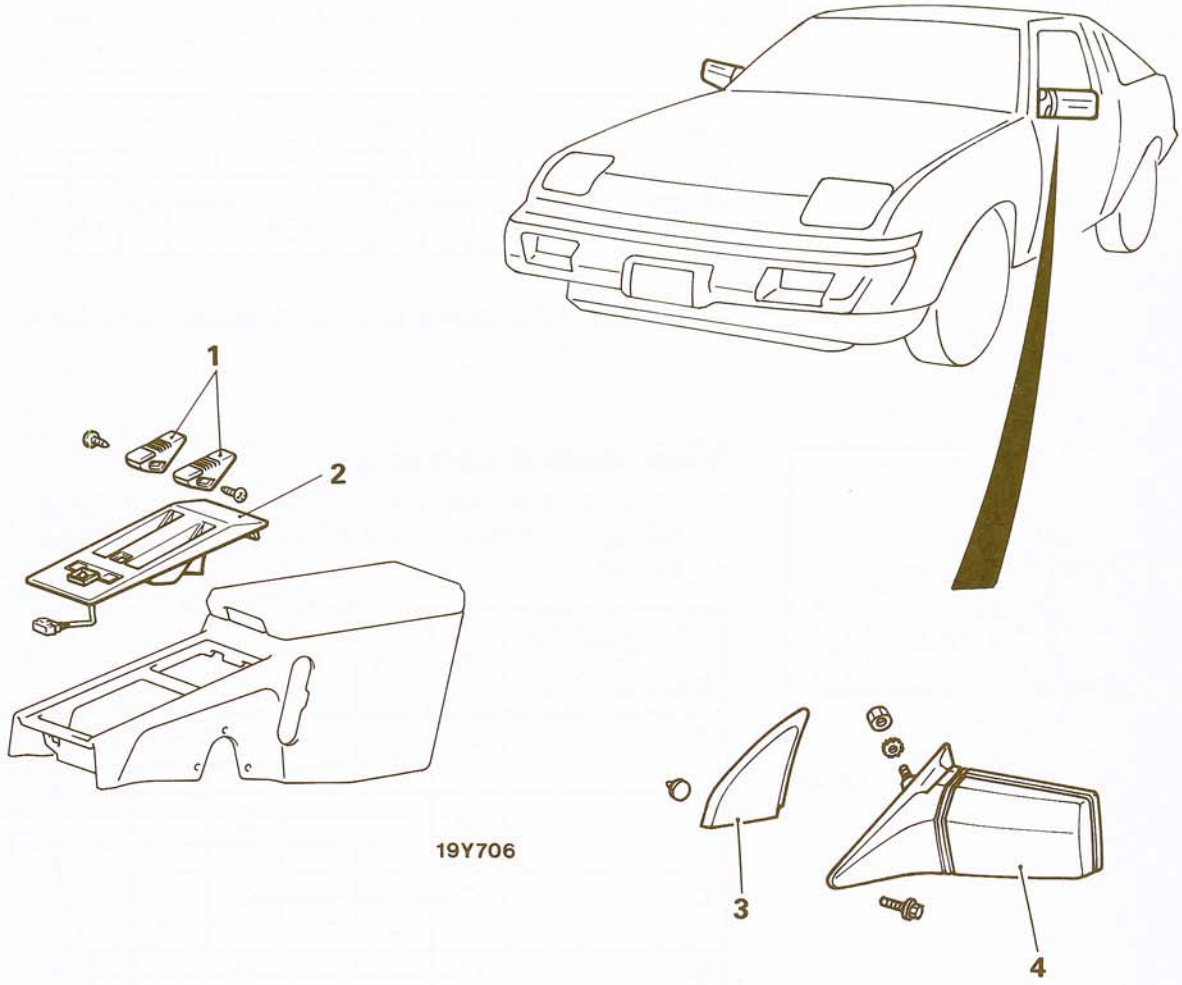

19Y706

Mirror switch removal steps

1. Spool release lever
2. Rear console panel (with mirror switch)

Mirror removal steps

3. Door corner trim
4. Door mirror assembly

NOTE
Reverse the removal procedures to reinstall.

18Y1745

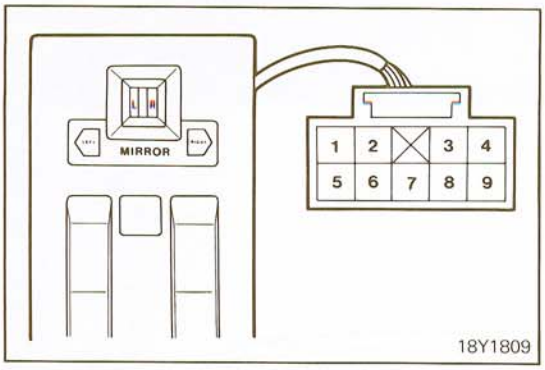

INSPECTION

MIRROR SWITCH

Operate the switch and check for continuity between the terminals.

Switch position \ Terminal	Left switch					Right switch					Lamp	
	4	8	3	7	6	4	2	9	7	6	1	5
Up	○—○			○—○		○—○			○—○			
Down	○	○		○	○	○	○		○	○		
Left	○		○	○	○	○		○	○	○		
Right	○—○			○—○		○—○			○—○			

NOTE
○–○ indicates that there is continuity between the terminals.

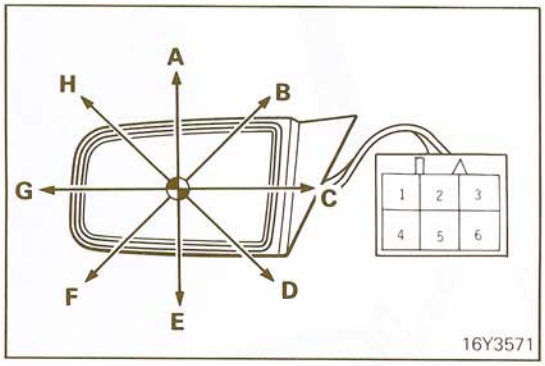

DOOR MIRROR ASSEMBLY

(1) Confirm that the mirror moves correctly when battery voltage is applied to the mirror side terminals as indicated below.

Direction \ Terminal	*B	**E	1	2	3	4	5	6
A	○	○					○	○
B	○	○		○	○		○	○
C	○	○		○	○			
D	○	○		○	○		○	○
E	○	○					○	○
F	○	○		○	○		○	○
G	○	○		○	○			
H	○	○		○	○		○	○

*Battery (Electrical source)
**E (Ground)

(2) Check to see that there is continuity between heate terminals 1 and 4.

SUNROOF

N23TAAD

REMOVAL AND INSTALLATION

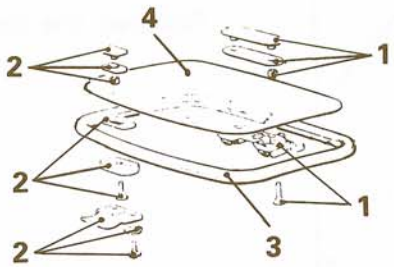

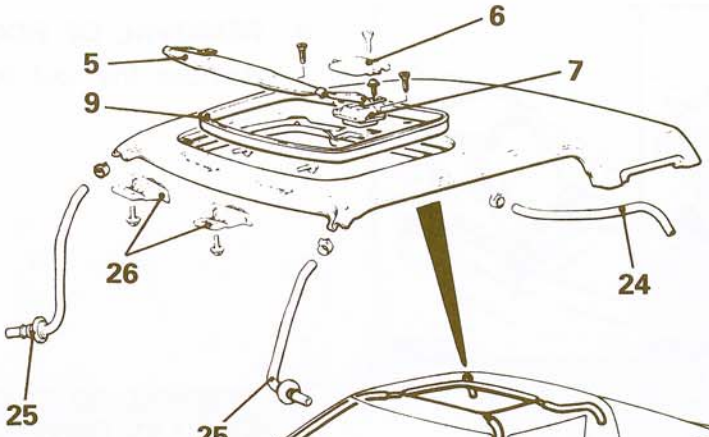

18Y1369

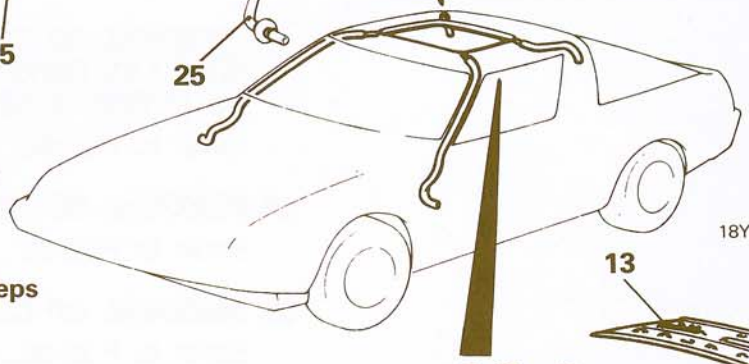

18Y1553

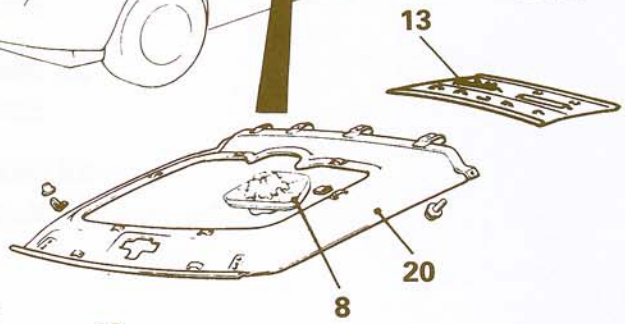

Roof lid glass removal steps

1. Sliding lock latch assembly
2. Roof lid male hinge assembly
3. Roof lid outer weatherstrip
- ➡◀ 4. Roof lid glass
- ◀➡ 5. Deflector

Roof lid regulator assembly removal steps

6. Roof lid latch catch
7. Retainer
- ◀➡ ➡◀ 8. Roof lid regulator assembly

Headlining removal steps

9. Roof lid inner weatherstrip
- ◀➡ 10. Roof side trim
- ◀➡ 11. Front pillar trim
- ◀➡ 12. Rear pillar trim
- ◀➡ 13. Roll bar trim
- ◀➡ 14. Upper quarter trim
15. Assist grip
16. Sunvisor
17. Room lamp cover
18. Room lamp
19. Rear view inside mirror
- ◀➡ 20. Headlining

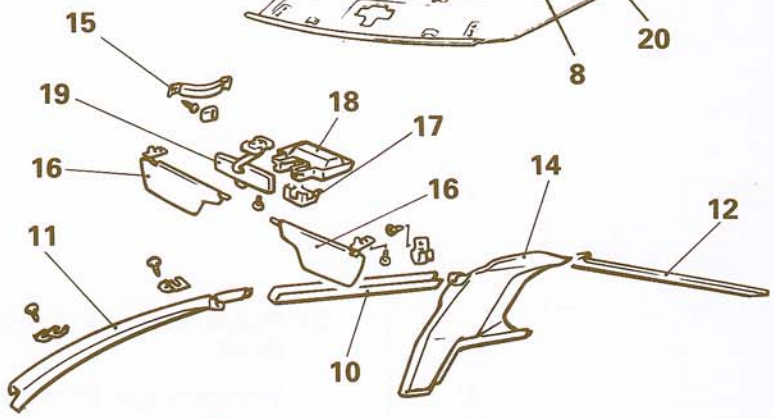

Drain pipe removal steps

- ◀➡ 21. Cowl side trim (L.H. side)
22. Relay box
- ◀➡ 23. Glove box
- ◀➡ 24. Rear drain pipe
- ◀➡ 25. Front drain pipe
- ➡◀ 26. Roof lid female hinge assembly

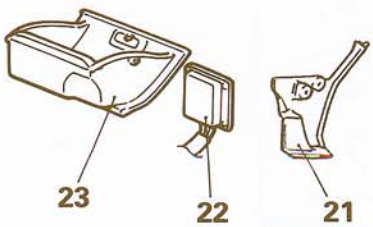

19Y710

NOTE
(1) Reverse the removal procedures to reinstall.
(2) ◀➡: Refer to "Service Points of Removal".
(3) ➡◀: Refer to "Service Points of Installation".

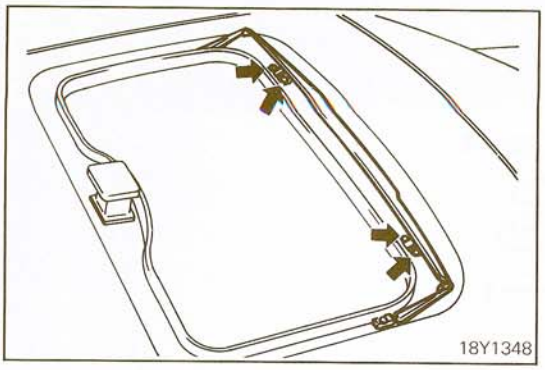

SERVICE POINTS OF REMOVAL

5. REMOVAL OF DEFLECTOR

Remove the deflector assembly.

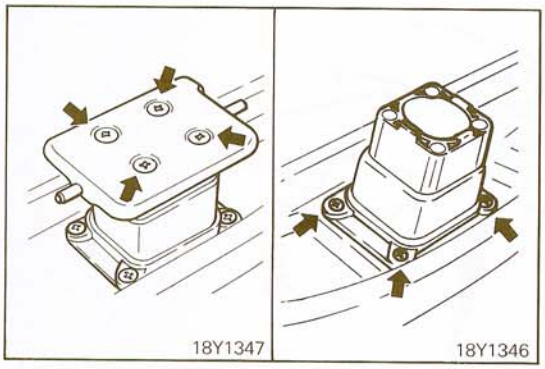

8. REMOVAL OF ROOF LID REGULATOR ASSEMBLY

Remove the roof lid regulator assembly.

10. REMOVAL OF ROOF SIDE TRIM / 11. FRONT PILLAR TRIM / 12. REAR PILLAR TRIM / 13. ROLL BAR TRIM / 14. UPPER QUARTER TRIM

Refer to P.23-86.

20. REMOVAL OF HEADLINING

Refer to P.23-92.

21. REMOVAL OF COWL SIDE TRIM (L.H. SIDE)

Refer to P.23-86.

23. REMOVAL OF GLOVE BOX

Refer to P.23-79.

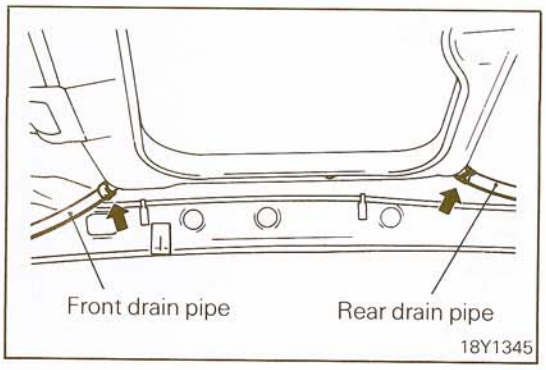

24. REMOVAL OF REAR DRAIN PIPE / 25. FRONT DRAIN PIPE

Remove the front and rear drain pipe.

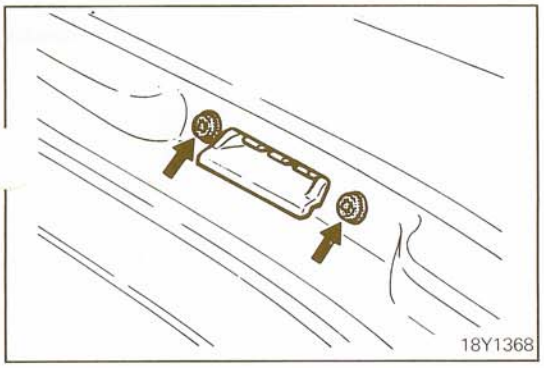

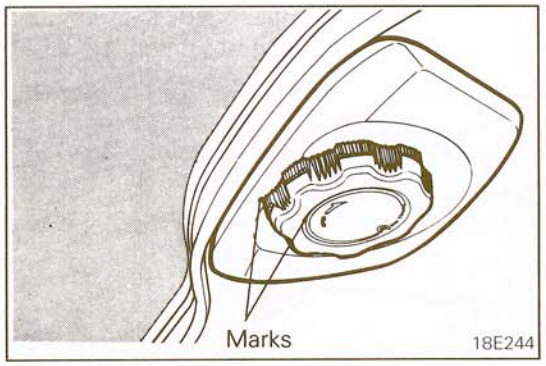

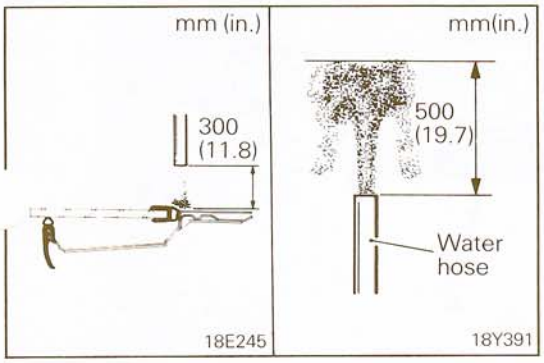

SERVICE POINTS OF INSTALLATION

26. INSTALLATION OF ROOF LID FEMALE HINGE ASSEMBLY

(1) For installation, insert front drain pipe from above, and rear drain pipe from below.
(2) After installing the roof lid female hinge assembly, apply the specified sealant to illustrated screw heads.

Specified sealant: 3M ART Part No. 8659 or equivalent

8. INSTALLATION OF ROOF LID REGULATOR ASSEMBLY

With the roof lid fully closed, check to ensure that the regulator knob marks are in alignment.

4. INSTALLATION OF ROOF LID GLASS

(1) Before installing the headlining, perform a water test by following procedure.
  ① Fully close the roof lid.
  ② Spray water against the seam between the roof lid and roof all around. Hold the hose and roof about 300 mm (11.8 in.) from the roof and spray water for more than five minutes.

  NOTE
  Adjust the water pressure so that the height of water sprayed will be about 500 mm (19.7 in.) as shown in illustration.

  ③ Check for water leaks in the passenger compartment.
  ④ If water leaks are evident, refer to troubleshooting and correct.

(2) If there are no leaks after the water test, remove the regulator, retainer and latch catch and install the headlining.
(3) Reinstall the regulator, retainer and latch catch.

LOOSE PANEL

N23SAAE

REMOVAL AND INSTALLATION

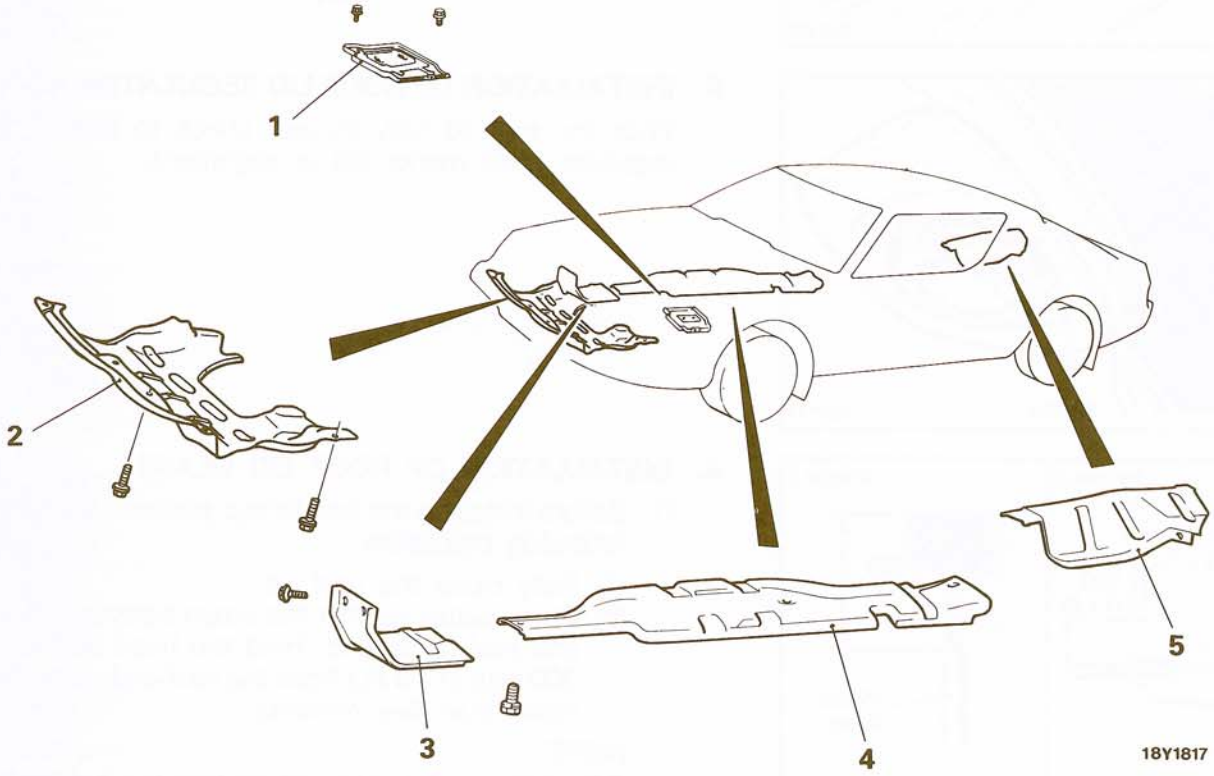

1. Battery tray
2. Underguard
3. Dash panel heatprotector
4. Floor panel heatprotector
5. Rear floor panel heatprotector

MARK, EMBLEM

N23VAAE

REMOVAL AND INSTALLATION

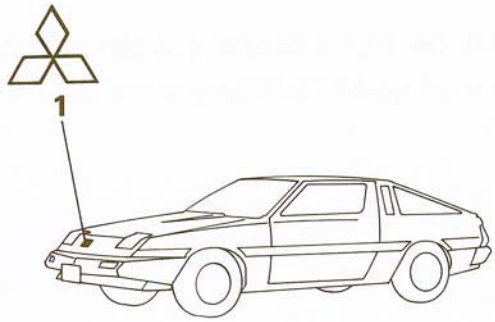

Vehicles without an intercooler

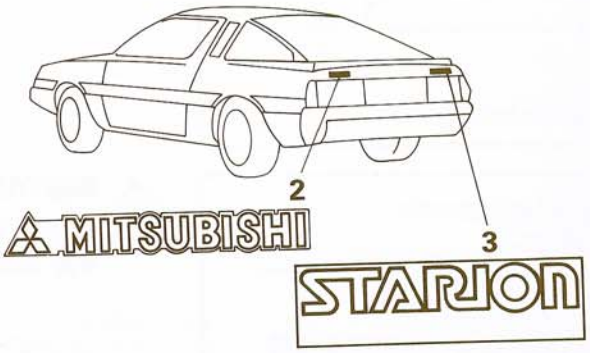

Vehicles with an intercooler

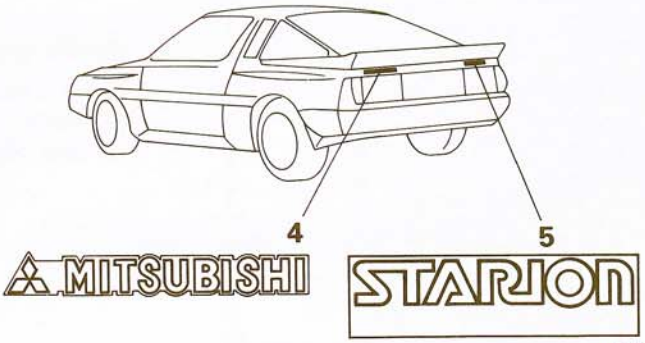

18Y1788

- ◆◆ 1. Top mark (three-dia)
- ◆◆ 2. Rear mark (MITSUBISHI)
- ◆◆ 3. Rear decal (STARION)
- ◆◆ 4. Rear mark (MITSUBISHI)
- ◆◆ 5. Rear decal (STARION)

NOTE
◆◆: Refer to "Service Points of Installation".

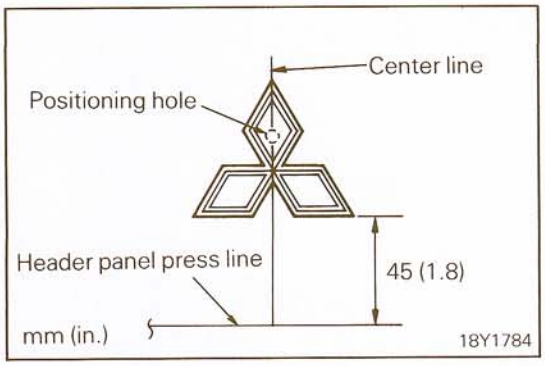

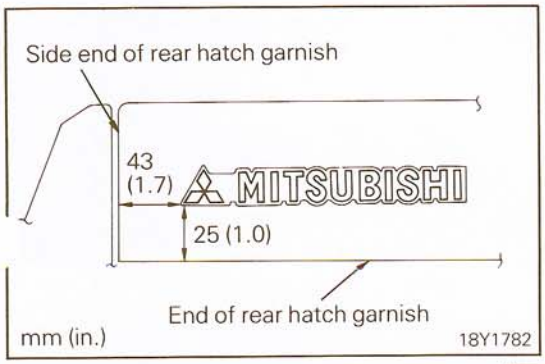

SERVICE POINTS OF INSTALLATION

1. INSTALLATION OF TOP MARK (THREE-DIA)

Attach the top mark (three-dia) with positioning hole up at the place shown in the illustration.

2. INSTALLATION OF REAR MARK (MITSUBISHI)

Attach the rear mark (MITSUBISHI) at the place shown in the illustration.

STB Revision

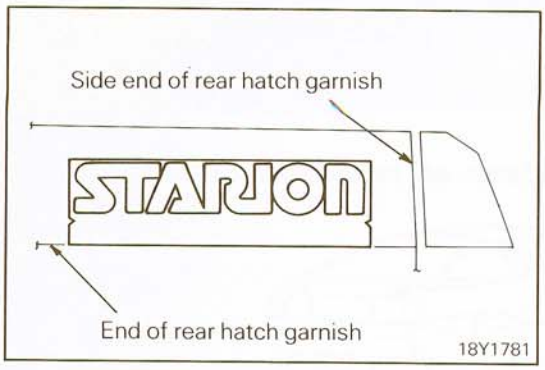

3. INSTALLATION OF REAR DECAL (STARION)

With end of decal aligned with the end of rear hatch garnish, attach the rear decal at the place shown in the illustration.

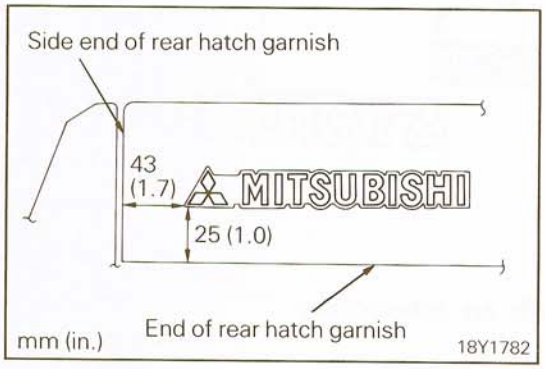

4. INSTALLATION OF REAR MARK (MITSUBISHI)

Attach the rear mark (MITSUBISHI) at the place shown in the illustration.

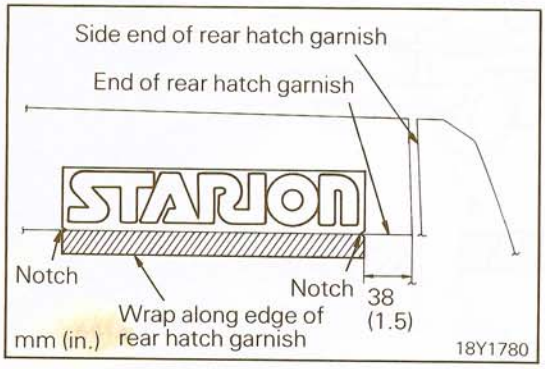

5. INSTALLATION OF REAR DECAL (SRARION)

With notches of the decal aligned with the end of rear hatch garnish, attach the rear decal (STARION) at the place shown in the illustration.

AERO PARTS

N23XAAB

REMOVAL AND INSTALLATION (FRONT)

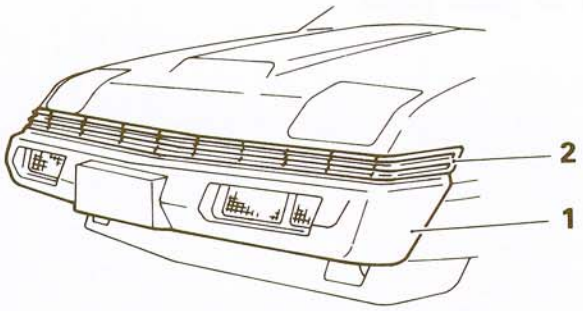

18Y1761

Vehicles with an intercooler

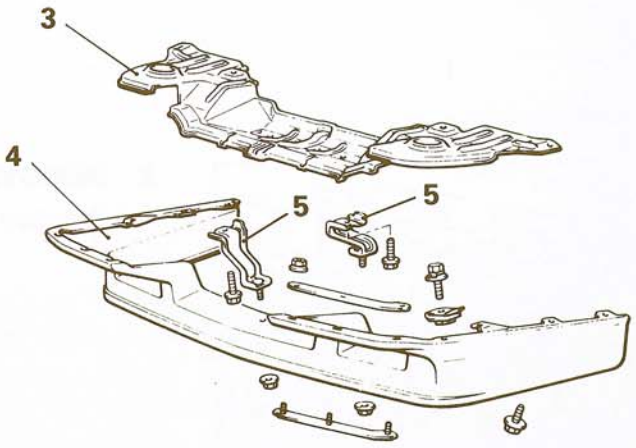

18Y1700

Vehicles without an intercooler

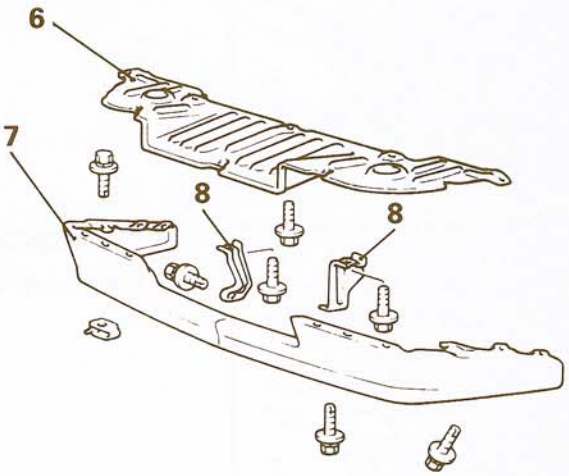

18Y1672

Front skirt panel removal steps (vehicles with an intercooler)

- ◆◆ 1. Front bumper
- ◆◆ 2. Radiator grill
- ◆◆ 3. Air guide panel
- ◆◆ 4. Front skirt panel
- 5. Air dam bracket

Front skirt panel removal steps (vehicles without an intercooler)

- ◆◆ 1. Front bumper
- ◆◆ 2. Radiator grill
- ◆◆ 6. Air guide panel
- ◆◆ 7. Front skirt panel
- 8. Air dam bracket

NOTE
(1) Reverse the removal procedures to reinstall.
(2) ◆◆: Refer to "Service Points of Removal".

SERVICE POINTS OF REMOVAL

1. REMOVAL OF FRONT BUMPER

Refer to P.23-36

2. REMOVAL OF RADIATOR GRILL

Refer to P.23-40.

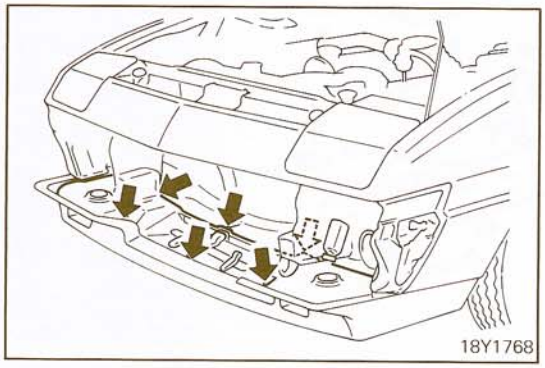

3. REMOVAL OF AIR GUIDE PANEL

Remove the air guide panel.

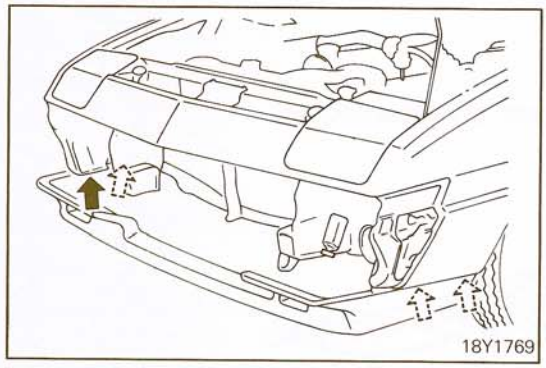

4. REMOVAL OF FRONT SKIRT PANEL

Remove the front skirt panel.

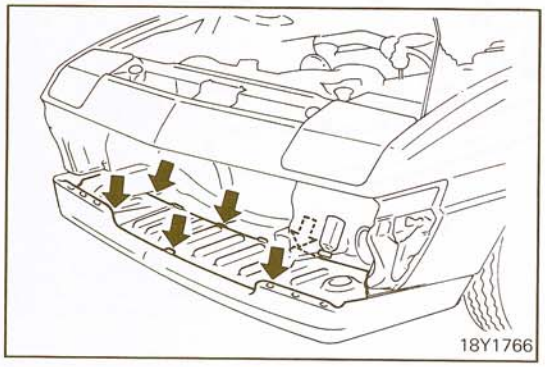

6. REMOVAL OF AIR GUIDE PANEL

Remove the air guide panel.

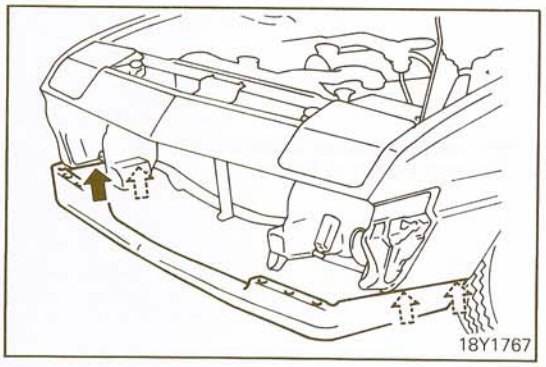

7. REMOVAL OF FRONT SKIRT PANEL

Remove the front skirt panel.

REMOVAL AND INSTALLATION (SIDE AND REAR)

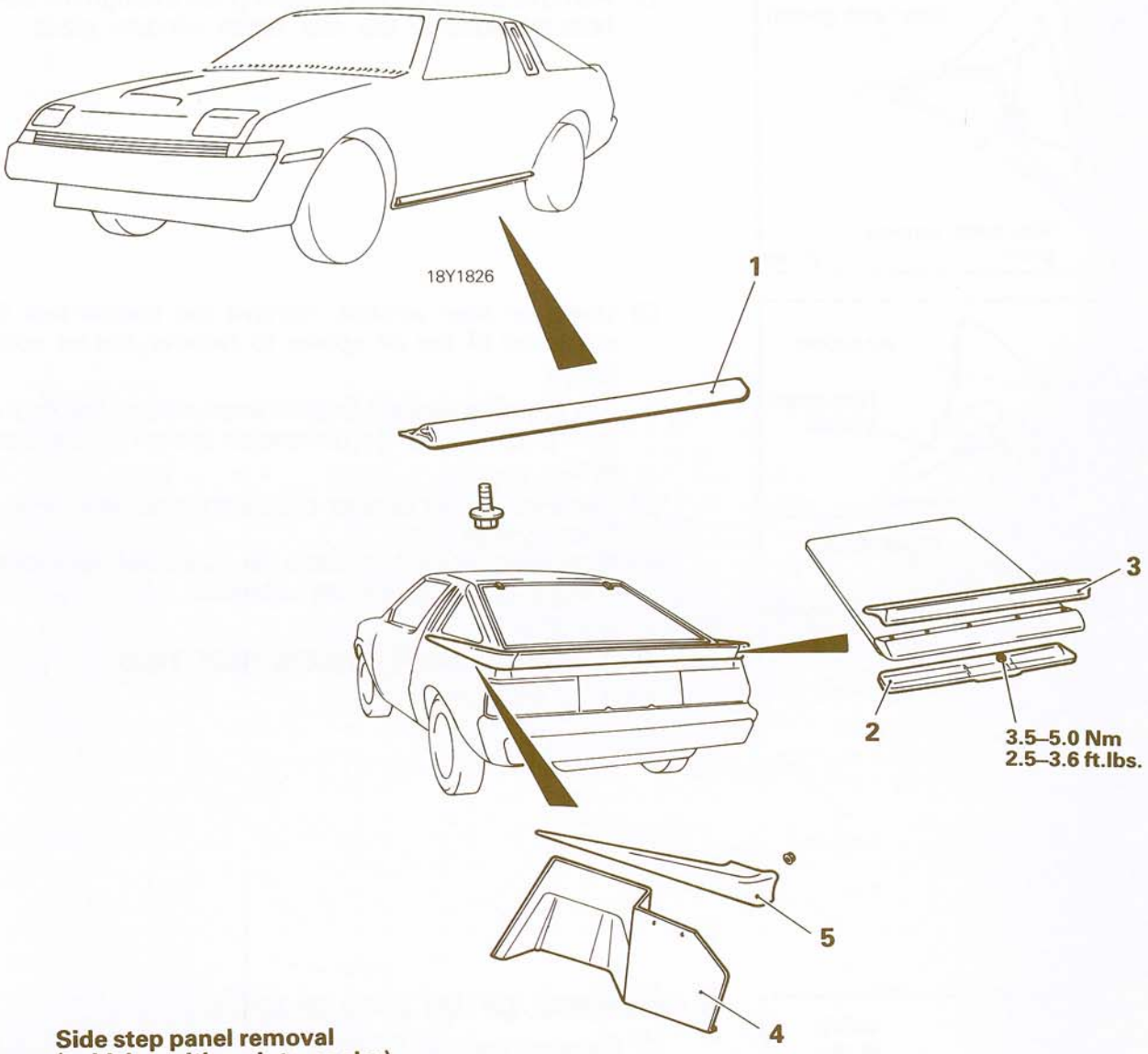

Side step panel removal (vehicles with an intercooler)

◆◆ 1. Side step

Air spoiler removal steps

2. Rear hatch trim
◆◆ ▶◀ 3. Air spoiler (center)
◆◆ ▶◀ 4. Trunk room side trim
◆◆ 5. Air spoiler (side)

18Y1714

NOTE
(1) Reverse the removal procedures to reinstall.
(2) ◆◆: Refer to "Service Points of Removal".
(3) ▶◀: Refer to "Service Points of Installation".

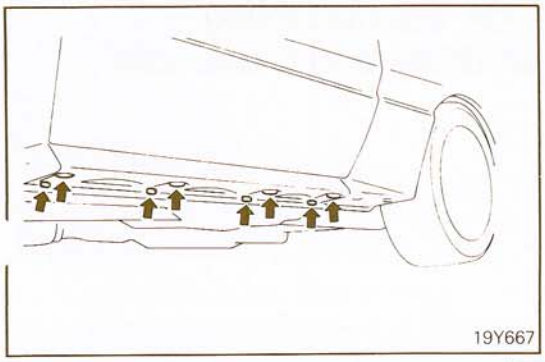

SERVICE POINTS OF REMOVAL

1. REMOVAL OF SIDE STEP PANEL

Remove the plugs and remove the side step panel mounting bolts.

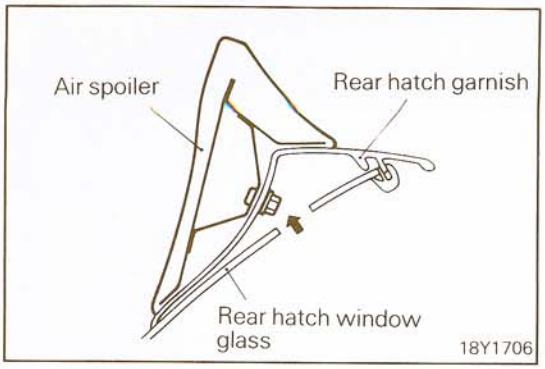

3. REMOVAL OF AIR SPOILER (CENTER)

(1) Remove the air spoiler attaching nut through the service hole provided in the rear hatch window glass.

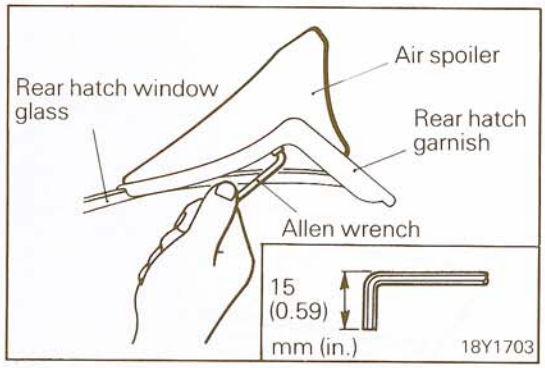

(2) Using an allen wrench, remove the special bolt from each end of the air spoiler to remove the air spoiler.

NOTE
Cut the allen wrench [with a width across the flats of 5 mm (0.20 in.)] to the dimension shown in the illustration.

(3) Remove the air spoiler mounting nuts from the rear hatch garnish.
(4) Remove the air spoiler from the rear hatch garnish with a sharp knife to cut the adhesive.

4. REMOVAL OF TRUNK ROOM SIDE TRIM

Refer to P.23-86.

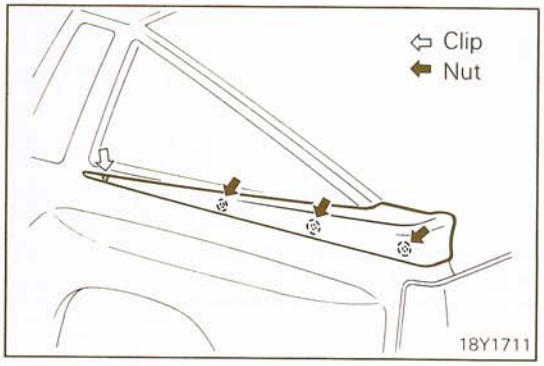

5. REMOVAL OF AIR SPOILER (SIDE)

(1) Remove the plug from the rear end of the side spoiler.
(2) Remove the side spoiler mounting nuts and clips to remove the side spoiler.

SERVICE POINTS OF INSTALLATION

4. INSTALLATION OF TRUNK ROOM SIDE TRIM

Refer to P.23-86.

3. INSTALLATION OF AIR SPOILER (CENTER)

(1) Before installing the air spoiler, apply specified adhesive to entire periphery of installation surface.

Specified adhesive: 3M ART Part No. 8626, 3M Adhesive EC-5310 or equivalent

(2) Because the air spoiler is made of urethane resin, be sure to follow the instructions below concerning maintenance.

① The air spoiler will be discolored or stained if such things as brake fluid, engine oil, grease, paint thinner, battery fluid, ordinary wax, etc. become adhered to it. If any of these things accidentally spill onto the air spoiler, they should be immediately cleaned by using alcohol.

② Do not use a compound-type wax or a hard brush, etc. to clean the air spoiler; doing so could scratch the air spoiler.

③ If the possibility exists that the air spoiler might be subjected to high temperature during repair procedures, it should either be removed, or treated in some way so as to protect it from heat.

④ The air spoiler surface will become whitish if ordinary wax or mud adheres to it. After cleaning the surface well, apply a coating of black upholstery cleaner.

INSTRUMENT PANEL

N23VAAI

The following bolts and screws are used for instrument panel installation. In the illustration for "Service Points of Removal", they are identified by symbols.

Symbol	Name and shape	Dimension mm (in.)	Symbol	Name and shape	Dimension. mm (in.)
F	Washer assembled screw  18U0419	O.D. = 5 (0.20) L = 16 (0.63)	A	Washer assembled screw  19W654	O.D. = 5 (0.20) L = 16 (0.63)
G	Washer assembled bolt  19W651	O.D. = 6 (0.24) L = 16 (0.63)	E	Tapping screw  18U0418	O.D. = 5 (0.20) L = 12 (0.47)
H	Washer assembled bolt 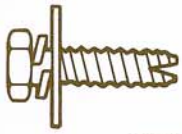 18U0420	O.D. = 6 (0.24) L = 16 (0.63)	D	Tapping screw  18U0418	O.D. = 5 (0.20) L = 16 (0.47)
B	Tapping screw  18U0418	O.D. = 5 (0.20) L = 20 (0.78)p.77	I	Washer assembled screw  19W654	O.D. = 5 (0.20) L = 12 (0.47)
C	Washer assembled screw  19Y709	O.D. = 5 (0.20) L = 25 (1.0)			

INSTRUMENT PANEL

REMOVAL AND INSTALLATION

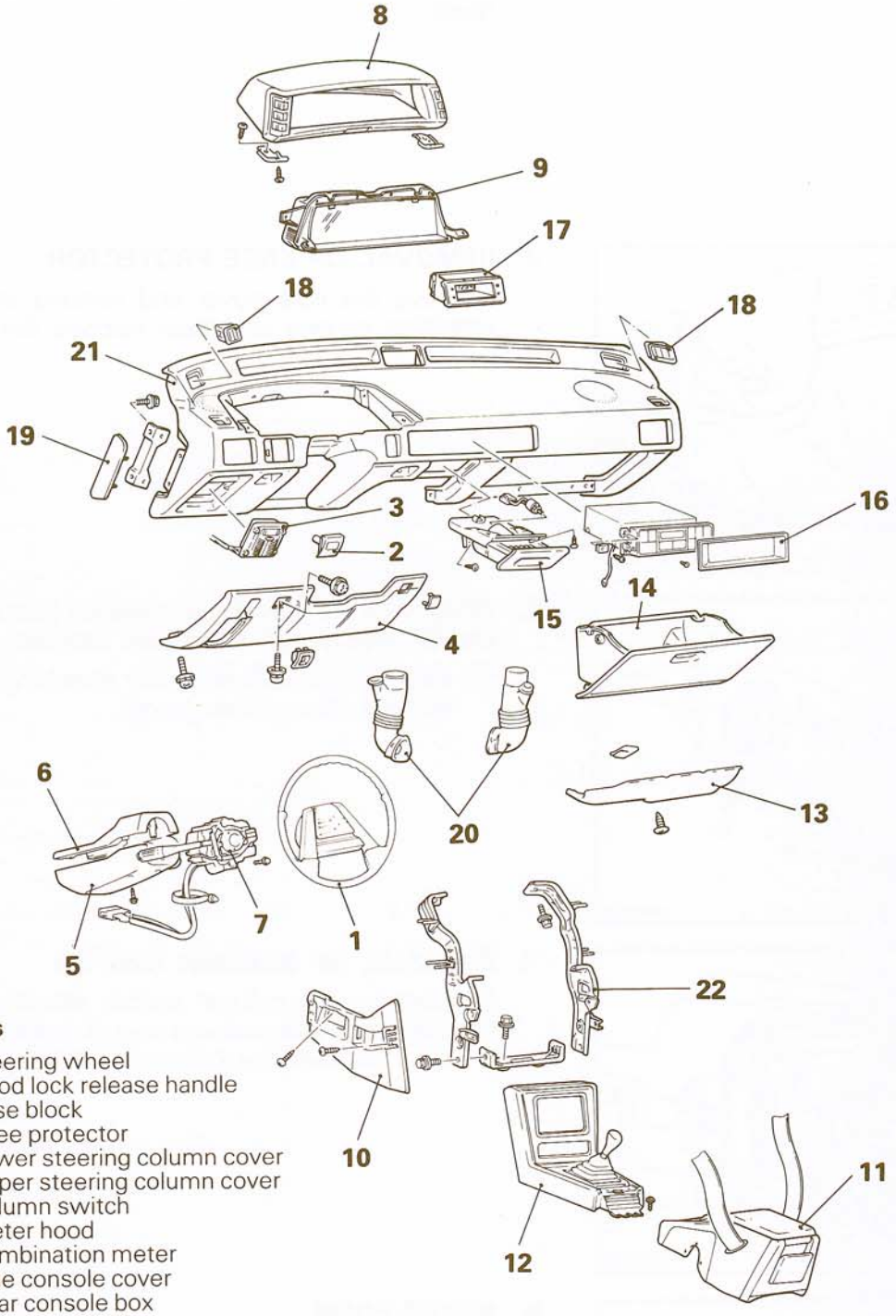

Removal steps

- ◆■◆ 1. Steering wheel
- 2. Hood lock release handle
- 3. Fuse block
- ◆■◆ 4. Knee protector
- ◆■◆ 5. Lower steering column cover
- ◆■◆ 6. Upper steering column cover
- ◆■◆ 7. Column switch
- ◆■◆ 8. Meter hood
- ◆■◆ 9. Combination meter
- ◆■◆ 10. Side console cover
- ◆■◆ 11. Rear console box
- ◆■◆ 12. Front console box
- 13. Under cover
- ◆■◆ ■◆ 14. Glove box
- 15. Ashtray
- 16. Heater control bezel
- 17. Digital clock
- ◆■◆ 18. Side defroster upper grille
- ◆■◆ 19. Instrument pad side cover
- 20. Side defroster duct
- ◆■◆ ■◆ 21. Instrument panel
- ◆■◆ 22. Center reinforcement

NOTE
(1) Reverse the removal procedures to reinstall.
(2) ◆■◆: Refer to "Service Points of Removal".
(3) ■◆: Refer to "Service Points of Installation".

19Y703

SERVICE POINTS OF REMOVAL

1. REMOVAL OF STEERING WHEEL

Refer to GROUP 19 STEERING – Power Steering Column Shaft.

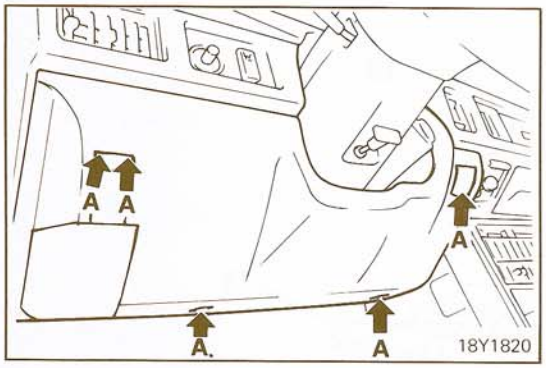

4. REMOVAL OF KNEE PROTECTOR

Remove the hole cover and remove the knee protector attaching screws and then remove the knee protector.

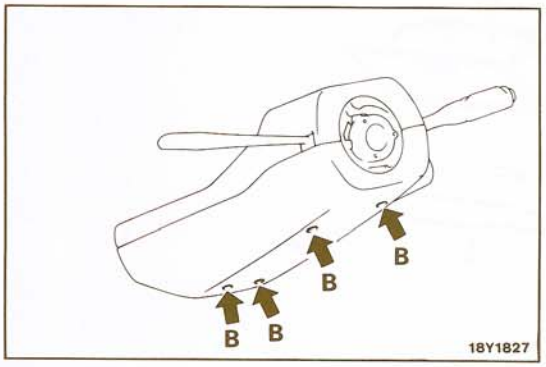

5. REMOVAL OF LOWER STEERING COLUMN COVER / 6. UPPER STEERING COLUMN COVER

(1) Remove the column cover attaching screws and then remove the column cover.

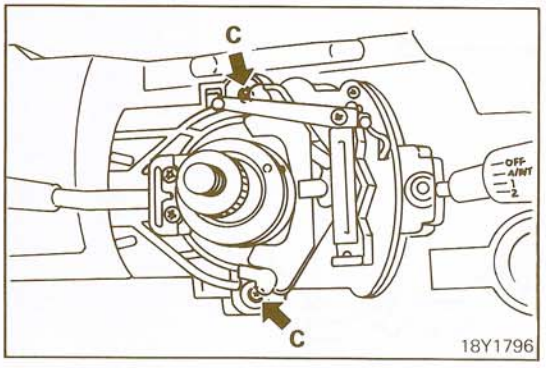

7. REMOVAL OF COLUMN SWITCH

(1) Remove the column switch attaching screws.
(2) Disconnect the column switch harness connectors and then remove the column switch.

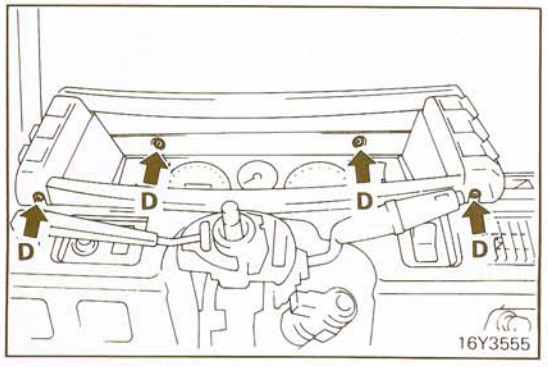

8. METER FOOD

(1) Remove the meter hood mounting screws.
(2) Pull both edges of the bottom side of the hood forward, and then, while still holding it in this position, pull it obliquely upward and out.
(3) Disconnect the cluster switch connectors on both sides of the meter hood.

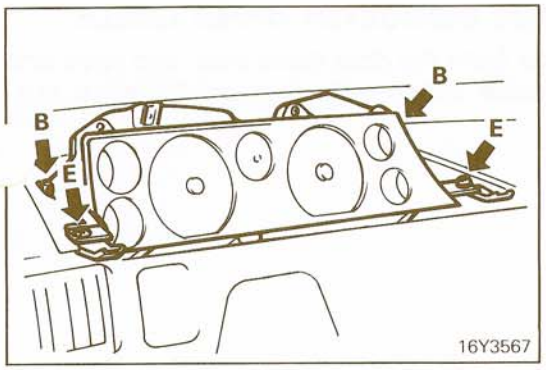

9. REMOVAL OF COMBINATION METER

(1) Remove the screws on the bottom part of the case.
(2) Remove the nuts on the upper part of the case. Pull both sides of the lower part of the case up while pulling it forward at the same time.

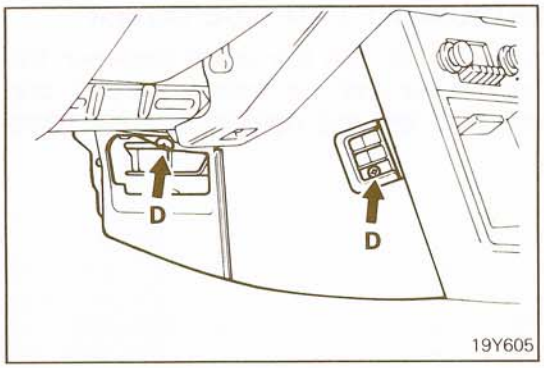

10. REMOVAL OF SIDE CONSOLE COVER

(1) Remove the side console cover screws.
(2) Remove the cover downward while pushing it slightly forward.

11. REMOVAL OF REAR CONSOLE BOX / 12. FRONT CONSOLE BOX

Refer to P.23-84.

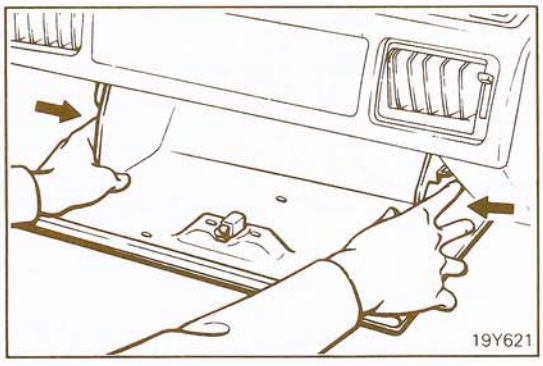

14. REMOVAL OF GLOVE BOX

(1) Grasp and release the glove box lid lock to open the lid. Pull the glove box forward while pressing both sides inward.

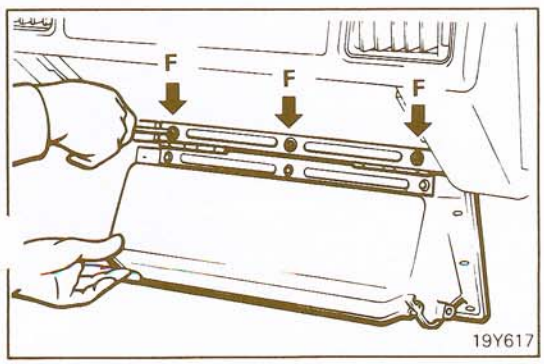

(2) Remove the glove box.

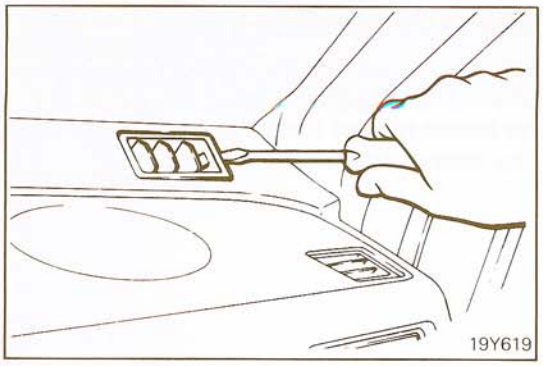

18. REMOVAL OF SIDE DEFROSTER UPPER GRILLE

Insert a screwdriver from the door glass side, and twist and pry the side defroster upper grille forward to pull it out.

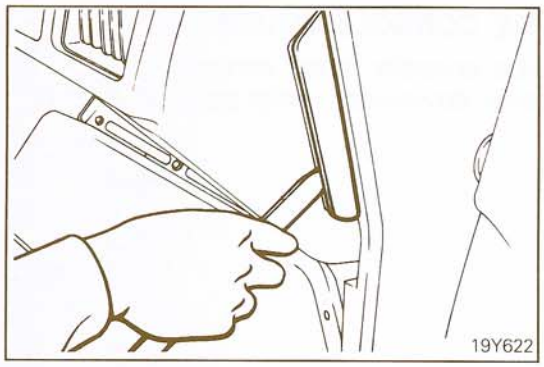

19. REMOVAL OF INSTRUMENT PAD SIDE COVER

Insert the tip of the trim stick into the space between the instrument panel side cover and the instrument pad, and then twist to remove the left and right instrument panel side covers.

21. REMOVAL OF INSTRUMENT PANEL

(1) Remove the installation screws and bolts from the places shown below.
(2) Remove the front harness and glove box harness combination.
(3) Pull the instrument panel outward.

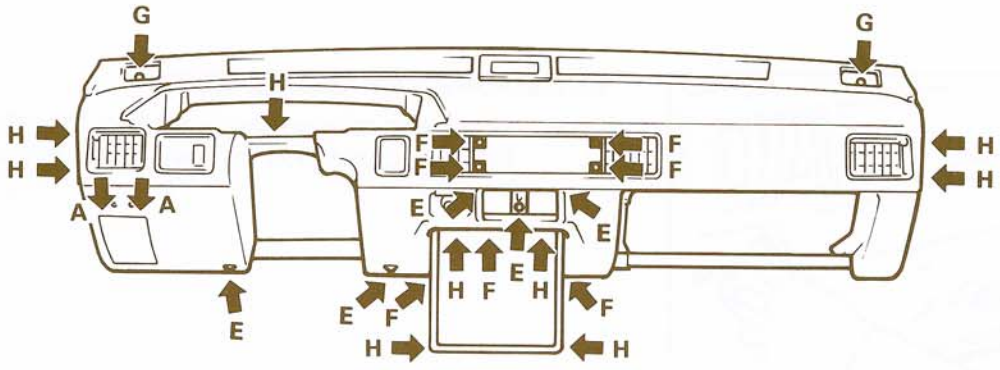

19Y610

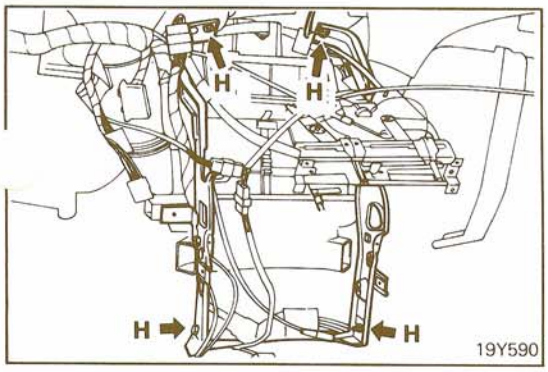

22. REMOVAL OF CENTER REINFORCEMENT

(1) Remove the center reinforcement bolts.
(2) Loosen the clamp for the main harness, and remove the panel.
(3) Take out the center reinforcement.

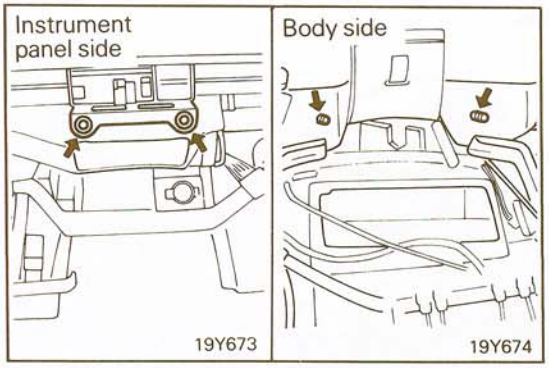

SERVICE POINTS OF INSTALLATION

21. INSTALLATION OF INSTRUMENT PANEL

(1) Place the guide pin so that it catches in the body of the heater unit (upper part).
(2) Check to be sure that the ventilator duct, wiring harness, etc., are correctly installed.

14. INSTALLATION OF GLOVE BOX

When the glove box is being installed, first temporarily tighten each screw, and then, after checking the left and right clearances between the glove box lid and the instrument pad while the lid is locked, tighten the screws completely.

FLOOR CONSOLE

N23UBAH

REMOVAL AND INSTALLATION

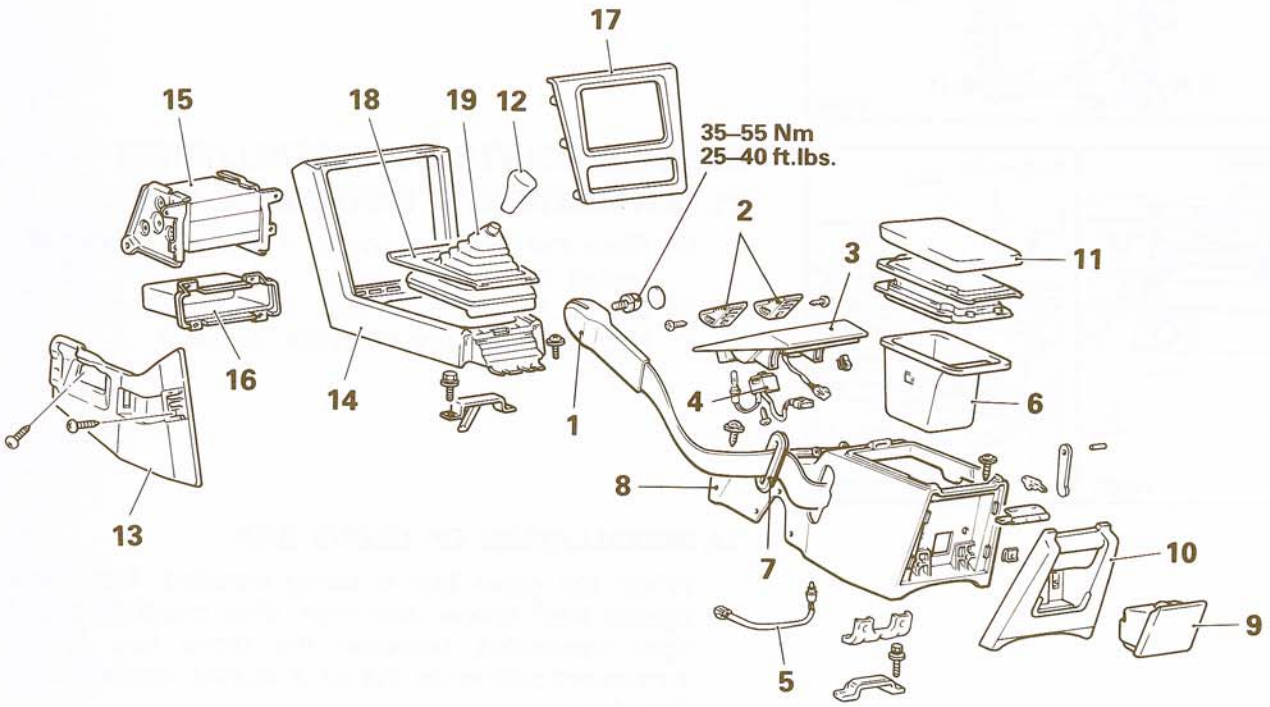

19Y708

Removal steps

1. Anchor plate connection
2. Spool release lever
3. Rear console panel
4. Remote control mirror switch
5. Rear console box harness
6. Inner box
◆◆ 7. Bezel
◆◆ 8. Rear console box
9. Ashtray
10. Accessory panel
11. Accessory box lid
12. Shift lever knob
◆◆ 13. Side console cover
◆◆ 14. Front console box
15. Radio
16. Parcel box
17. Radio panel
18. M/T garnish
19. Shift lever cover

NOTE
(1) Reverse the removal procedures to reinstall.
(2) ◆◆: Refer to "Service Points of Removal".
(3) ◆◆: Refer to "Service Points of Installation".

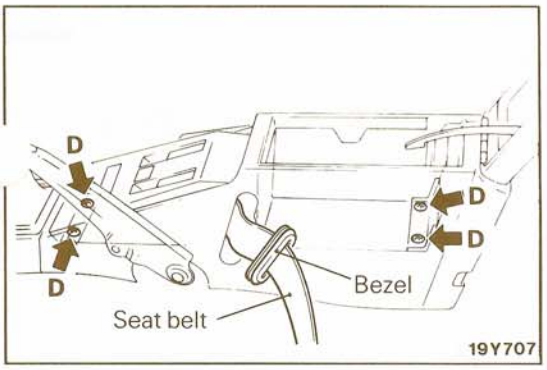

SERVICE POINTS OF REMOVAL

8. REMOVAL OF REAR CONSOLE BOX

(1) Remove the installation screws for the rear console box.
(2) Remove the bezel. Put the seat belt in the console box.

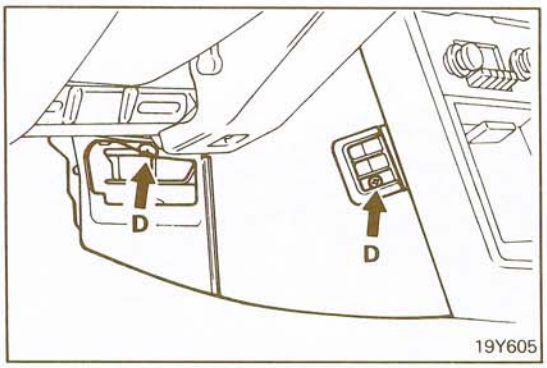

13. REMOVAL OF SIDE CONSOLE COVER

(1) Remove the side console cover screws.
(2) Remove the cover downward while pushing it slightly forward.

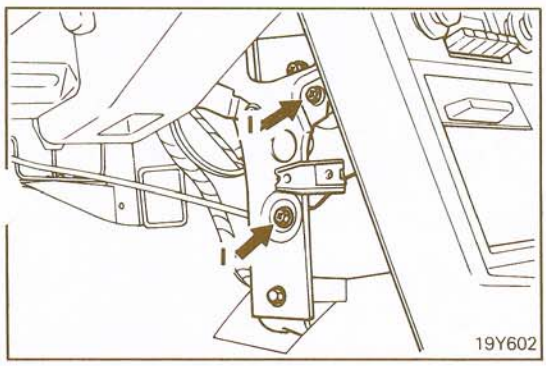

14. REMOVAL OF FRONT CONSOLE BOX

(1) Remove the radio installation screws from the center reinforcement.
(2) Move the shift lever to 4th gear.
(3) Pull the front console box slightly backward.

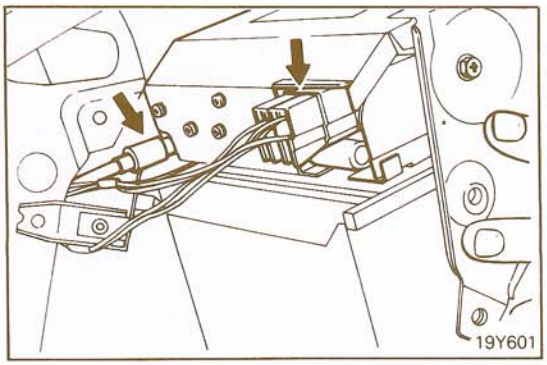

(4) Remove the part where the radio antenna feeder line is inserted and the connector for the radio.
(5) Pull the front console box out toward the passenger seat.

SERVICE POINT OF INSTALLATION

7. INSTALLATION OF BEZELS

Draw out the shoulder belts from the console box, and install bezels to the console box while paying attention to the installation direction. If the bezel is installed in the wrong way, the belt will twist in the console box.

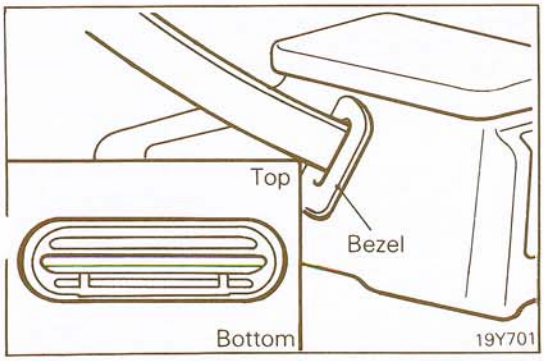

TRIMS

N23VCAI

REMOVAL AND INSTALLATION

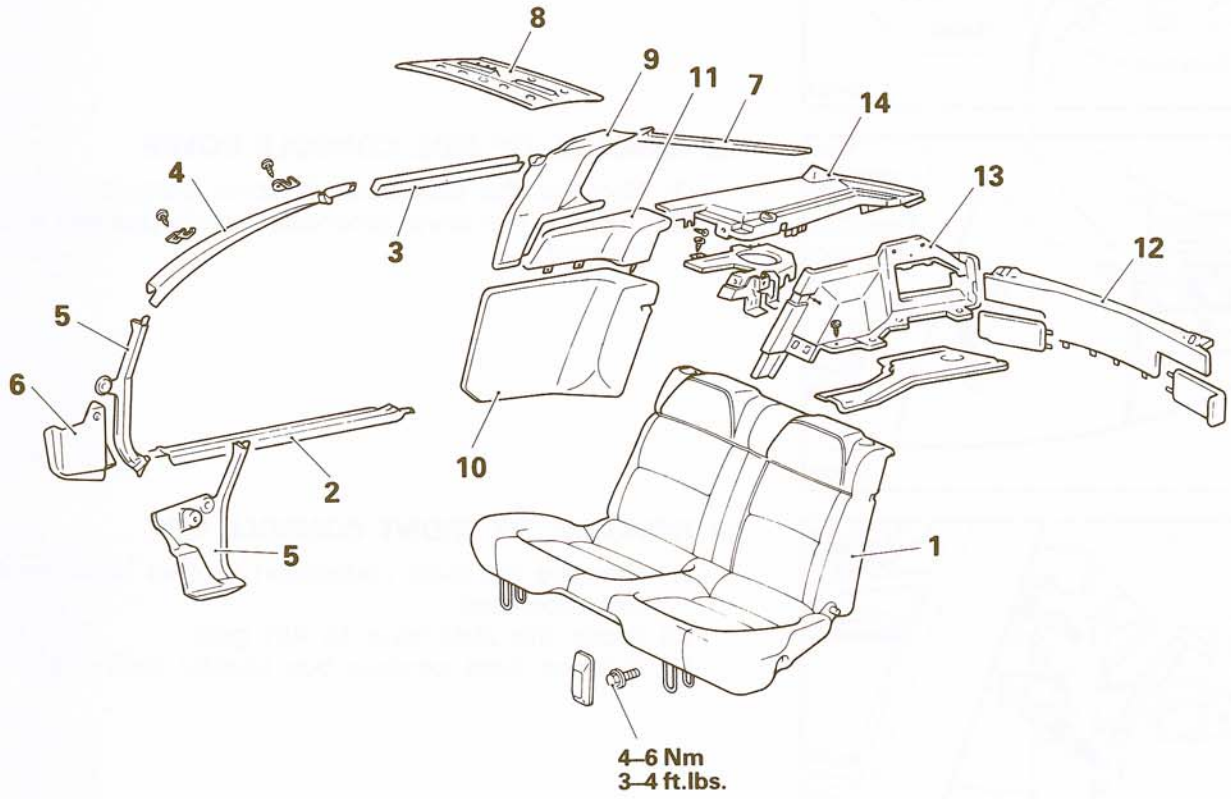

Removal steps

- 1. Rear seat
- ◀▶ ▶◀ 2. Scuff plate
- ◀▶ ▶◀ 3. Roof side trim
- ◀▶ 4. Front pillar trim
- ◀▶ 5. Cowl side trim
- ◀▶ 6. ECI cover
- ◀▶ ▶◀ 7. Rear pillar trim
- ◀▶ ▶◀ 8. Roll bar trim
- ◀▶ ▶◀ 9. Upper quarter trim
- ◀▶ 10. Quarter trim
- ◀▶ ▶◀ 11. Lap-round trim
- ◀▶ ▶◀ 12. Rear end trim
- ◀▶ ▶◀ 13. Trunk room side trim
- ◀▶ 14. Rear side shelf

NOTE
(1) Reverse the removal procedures to reinstall.
(2) ◀▶: Refer to "Service Points of Removal".
(3) ▶◀: Refer to "Service Points of Installation".

19Y676

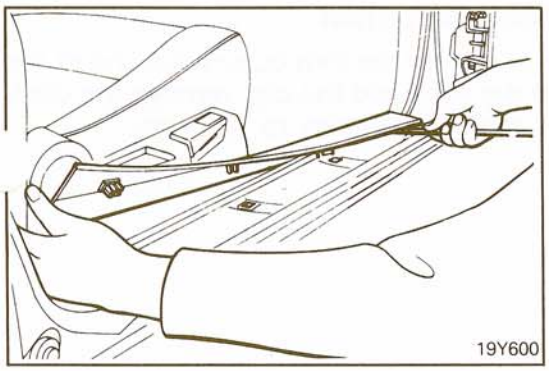

SERVICE POINTS OF REMOVAL

2. REMOVAL OF SCUFF PLATE

Insert the trim stick between the clip and the body, and remove the scuff plate.

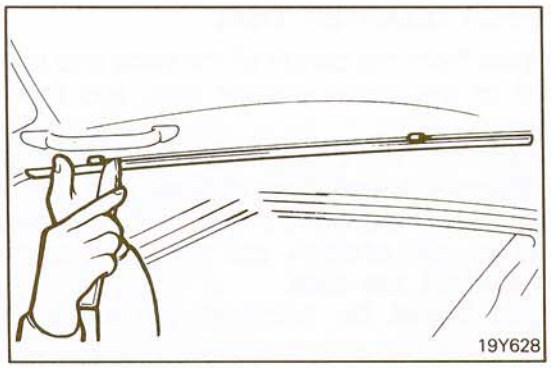

3. REMOVAL OF ROOF SIDE TRIM

Insert the trim stick into the upper part of the roof side trim from inside the vehicle, and then pull it forcefully while prying downward.

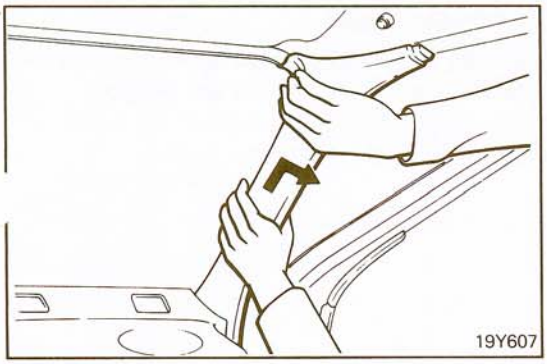

4. REMOVAL OF FRONT PILLAR TRIM

Remove the front pillar trim by pulling it in the direction of the arrow.

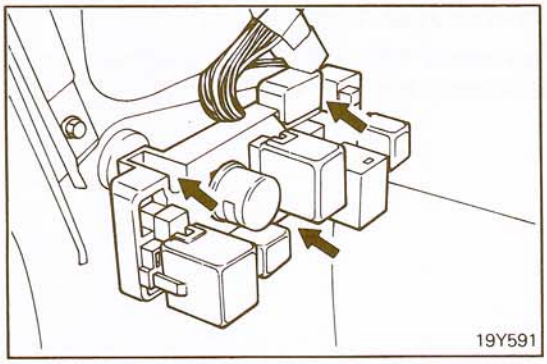

5. REMOVAL OF COWL SIDE TRIM / 6. ECI COVER

(1) Remove the relay box installation screws (driver's side), and then remove the cowl side trim (driver's side).
(2) Remove the ECI cover (passenger side), and then remove the cowl side trim (passenger side).

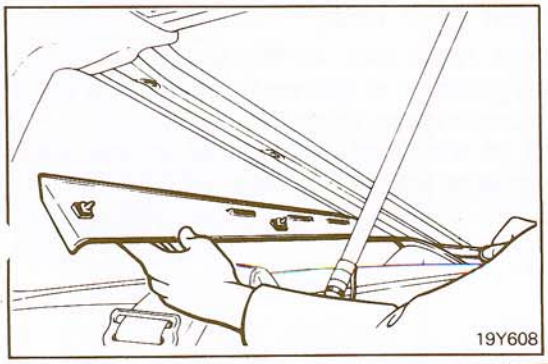

7. REMOVAL OF REAR PILLAR TRIM

(1) Open the rear hatch.
(2) Insert the trim stick between the body and the clip, twist downward, and remove the rear pillar trim.

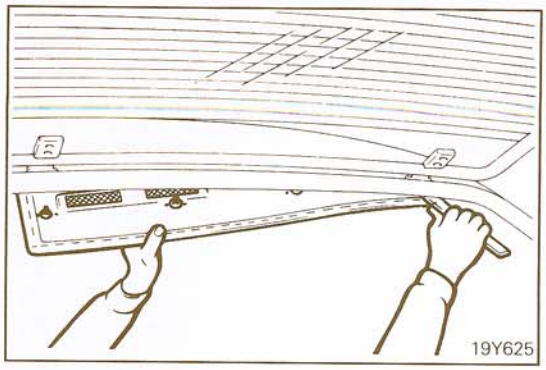

8. REMOVAL OF ROLL BAR TRIM

Pull the rear edge of the roll bar trim downward, insert the trim stick between the body and the clip, remove the clips, and then pull out the roll bar trim to the rear.

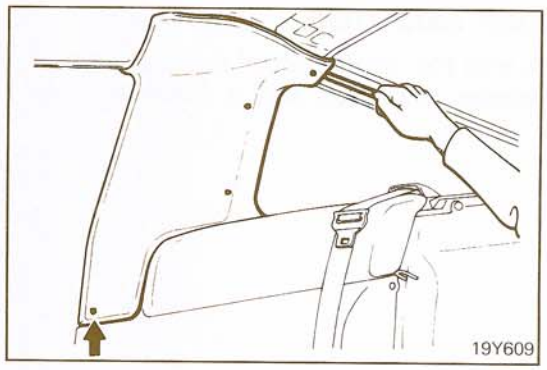

9. REMOVAL OF UPPER QUARTER TRIM

(1) Insert the trim stick from the center of the body into the upper right end of the upper quarter trim, and then remove the clip.
(2) Insert the trim stick from the lower side of the lower left end of the quarter trim, and then remove the clip.
(3) The trim stick cannot be used for the remaining clips, so insert a hand to the clip position, pull out the quarter trim, and then remove the clips.
(4) The quarter trim should be removed by pulling it forward.

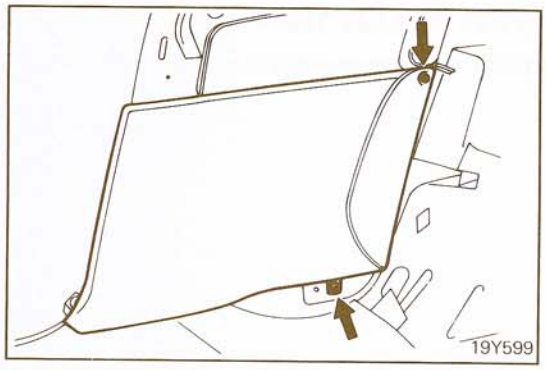

10. REMOVAL OF QUARTER TRIM

(1) Remove the quarter trim installation bolt and screw.
(2) Pull out the quarter trim forward at an angle.

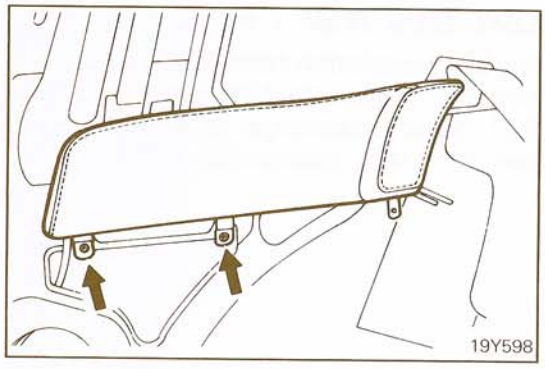

11. REMOVAL OF LAP-ROUND TRIM

(1) Remove the lap-round trim installation screws.
(2) Remove the lap-round trim by pulling it to the lower front side.

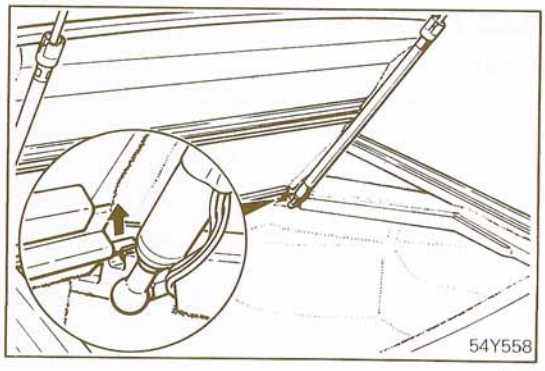

12. REMOVAL OF REAR END TRIM

(1) Remove the trunk room mat. At this time, detach the parcel strap and gather it at the end of the trunk room near the rear combination lights.
(2) Pull both sides of the front of the rear center shelf upward, and remove the rear center shelf.

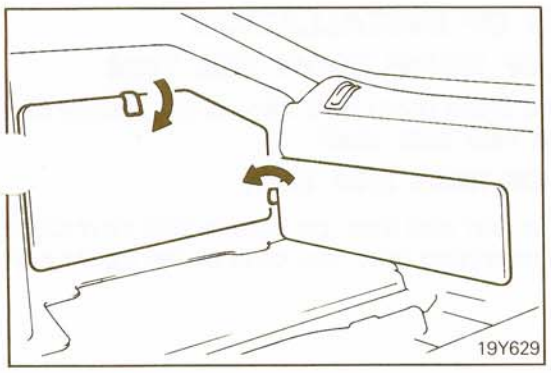

(3) Remove the jack storage cover from the trunk room side trim.
(4) Remove the rear end trim lid.

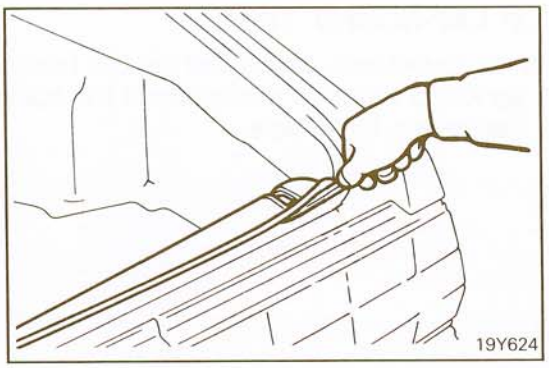

(5) Insert the trim stick into the gap between the weather-strip at the top of the tail lights and the rear end trim, and remove the clips.
(6) While pulling the rear end trim slightly upward, push the end toward the rear seat, and remove the trim.

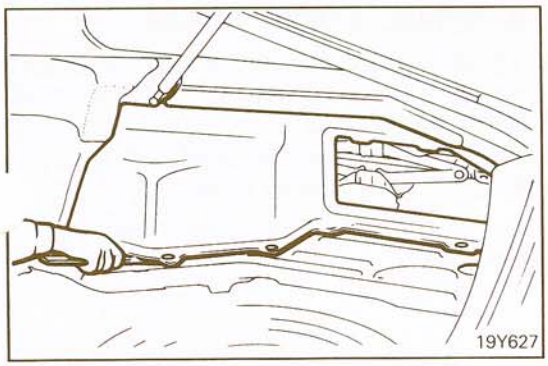

13. REMOVAL OF TRUNK ROOM SIDE TRIM

(1) Remove the trunk room side trim mounting screw, and then remove the clips by using the trim stick.
(2) Pull the lower end of the trunk room side trim toward the center of the vehicle, and remove the trim.

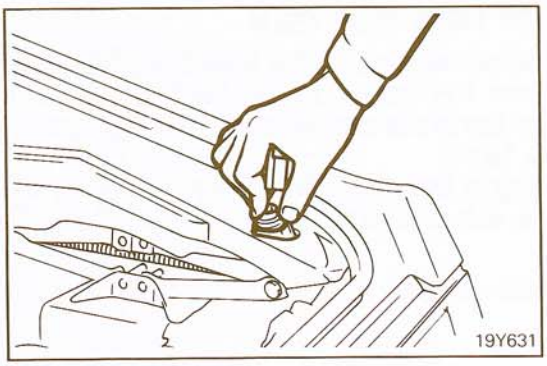

14. REMOVAL OF REAR SIDE SHELF

(1) After removing the cap of the rear washer tank, detach the tube from the rear side shelf.

NOTE
Be sure to drain the washer fluid before removal in order to avoid the possibility of the fluid spilling in the vehicle interior during the removal procedure.

(2) Disconnect the trunk room illumination connector.
(3) Disconnect the rear speaker connector.
(4) Disconnect the rear defogger connector.
(5) Remove the mounting screws of the rear side shelf.
(6) Close the rear hatch.
(7) Pull the rear side shelf forward.
(8) Remove the rear seat belt cover by passing it through the hole of the rear side shelf.

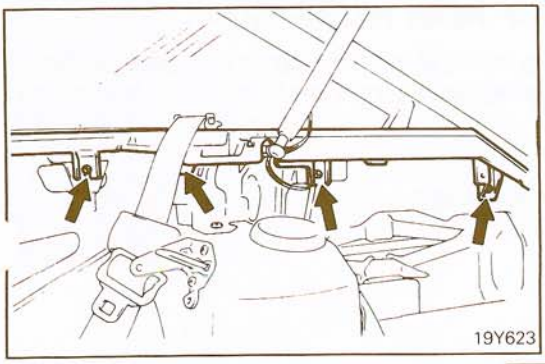

SERVICE POINTS OF INSTALLATION

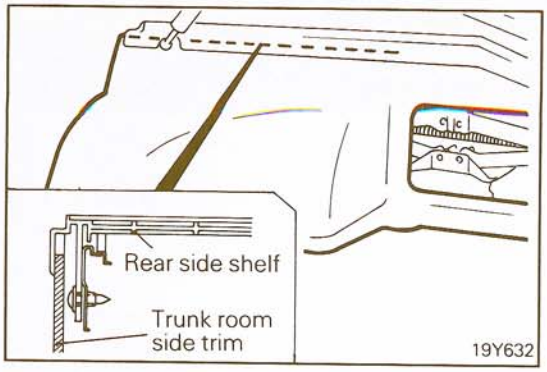

13. INSTALLATION OF TRUNK ROOM SIDE TRIM

When installing the trunk room side trim, fit it securely into the groove in the rear side shelf.

12. INSTALLATION OF REAR END TRIM

When installing the rear end trim, be sure to use new clips, and insert them, beginning from the clips at the lower part of the trim.

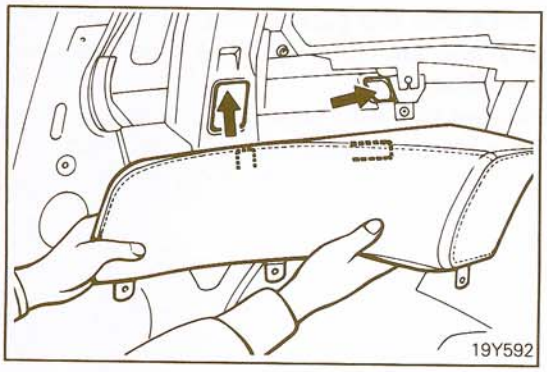

11. INSTALLATION OF LAP-ROUND TRIM

When installing the lap-round trim, insert and set the hooks on the back of the lap-round trim into the holes on the body at an angle from the lower front side.

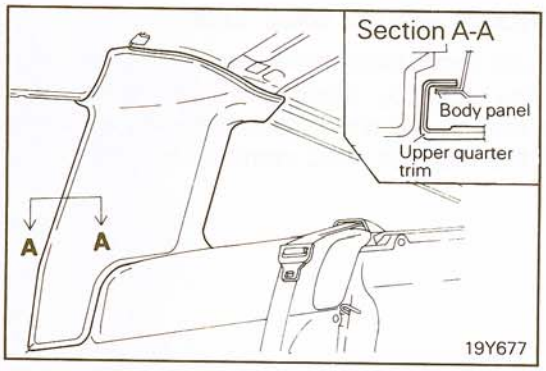

9. INSTALLATION OF UPPER QUARTER TRIM

When installing the upper quarter trim, align the positions of the right bottom end of the trim and the rear side shelf while fitting the upper quarter trim in from the front (the body flange should be overlapped by the trim), and then tap in the clips at both ends of the trim lightly by hand.

NOTE
Be sure to use new clips.

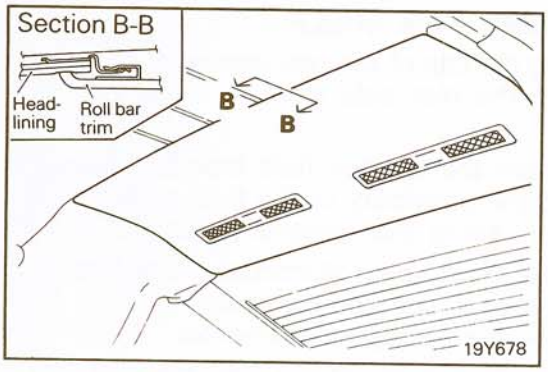

8. INSTALLATION OF ROLL BAR TRIM

When installing the roll bar trim, fit the hooks at the end of the roll bar trim into the hooks at the back end of the headlining, and then tap in the clips from the bottom side of the trim lightly by hand.
Begin by first tapping in the clip in the center, and then tap in the clips on the left and right sides.

NOTE
Be sure to use new clips.

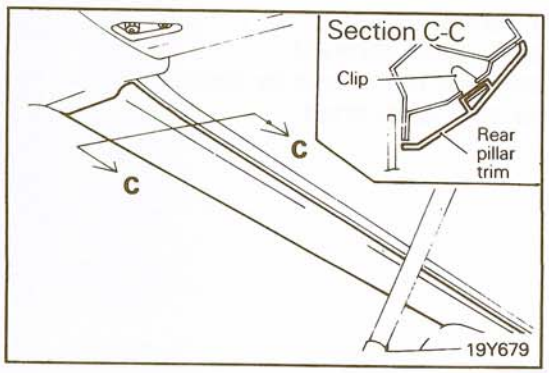

7. INSTALLATION OF REAR PILLAR TRIM

When installing the rear pillar trim, tap in the clips by fitting them in while tapping lightly by hand from the end of the trim.

NOTE
Be sure to use new clips.

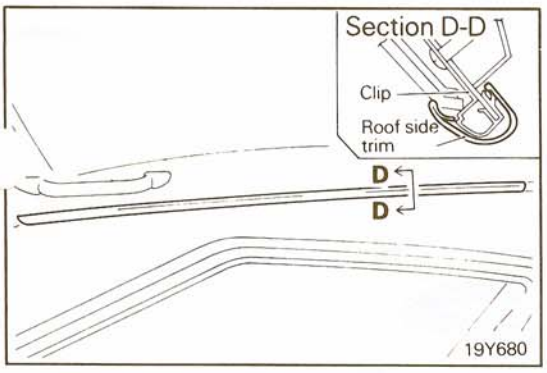

3. INSTALLATION OF ROOF SIDE TRIM

(1) When installing the roof side trim, attach the trim to the clips (the clips are fastened to the body by screws) by tapping the end of the trim lightly with your hand.
(2) Be sure that the gaps at places where the various trims meet are uniform.

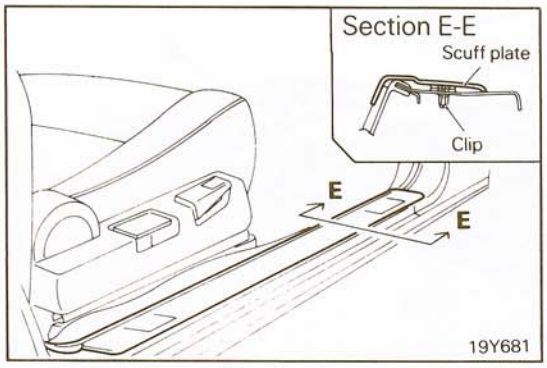

2. INSTALLATION OF SCUFF PLATE

(1) When installing the scuff plate, be sure that the gaps at places where it meets any of the trims are uniform.
(2) Attach the clip by tapping lightly by hand from the end of the trim.

HEADLINING

N23UDAJ

REMOVAL AND INSTALLATION

Vehicles with sunroof

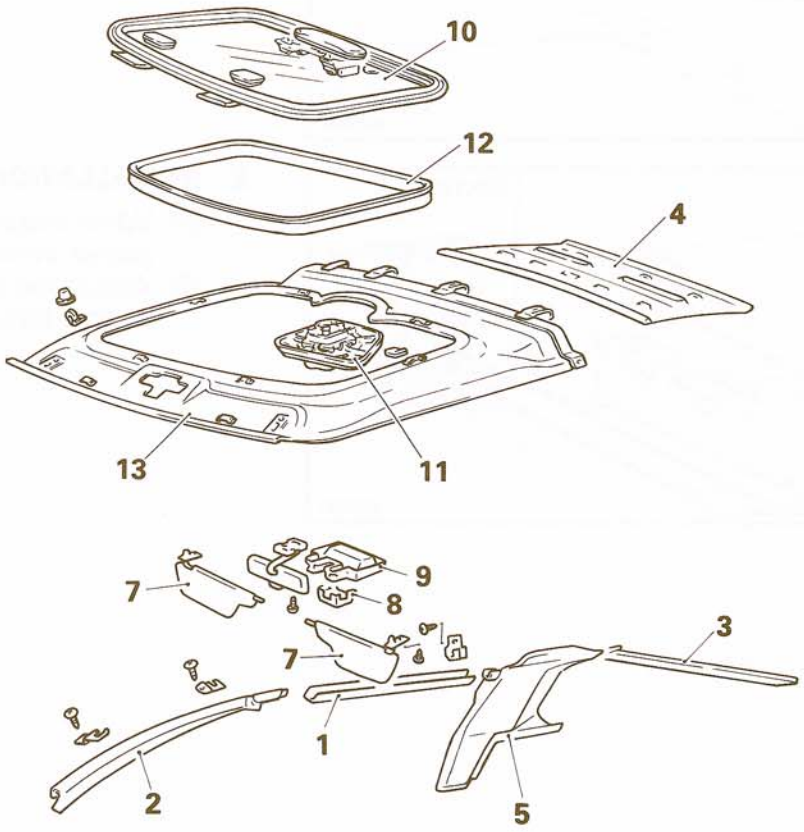

19Y684

Headlining removal steps (Vehicles with a sunroof)

- ◆◆ 1. Roof side trim
- ◆◆ 2. Front pillar trim
- ◆◆ 3. Rear pillar trim
- ◆◆ 4. Roll bar trim
- ◆◆ 5. Upper quarter trim
- 6. Assist grip
- 7. Sunvisor assembly
- ◆◆ 8. Dome light cover
- ◆◆ 9. Dome light
- ◆◆ 10. Roof lid glass
- ◆◆ ◆◆ 11. Roof lid regulator assembly
- 12. Roof lid inner weatherstrip
- ◆◆ 13. Headlining

Vehicles without sunroof

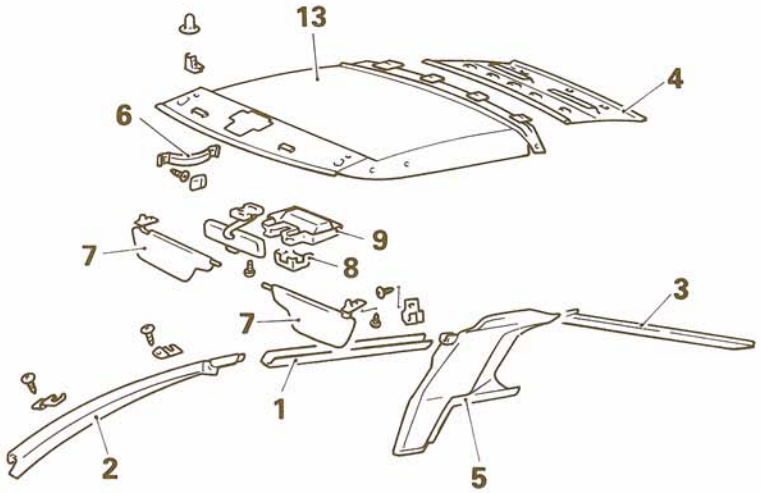

Headlining removal steps (Vehicles without a sunroof)

- ◆◆ 1. Roof side trim
- ◆◆ 2. Front pillar trim
- ◆◆ 3. Rear pillar trim
- ◆◆ 4. Roll bar trim
- ◆◆ 5. Upper quarter trim
- 6. Assist grip
- 7. Sunvisor assembly
- ◆◆ 8. Dome light cover
- ◆◆ 9. Dome light
- ◆◆ 13. Headlining

NOTE
(1) Reverse the removal procedures to reinstall.
(2) ◆◆: Refer to "Service Points of Removal".
(3) ◆◆: Refer to "Service Points of Installation".

19Y683

SERVICE POINTS OF REMOVAL

1. REMOVAL OF ROOF SIDE TRIM / 2. FRONT PILLAR TRIM / 3. REAR PILLAR TRIM / 4. ROLL BAR TRIM / 5. UPPER QUARTER TRIM

Refer to P.23-86.

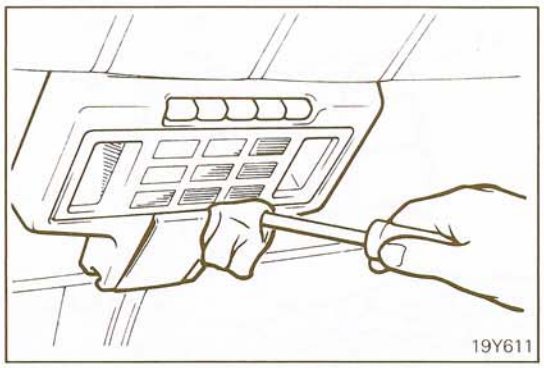

8. REMOVAL OF DOME LIGHT COVER / 9. DOME LIGHT

(1) Use a screwdriver to remove the cover of the dome light.
(2) Remove the dome light installation screws, and then pull out the dome light slightly.
(3) Remove the connector, and then remove the dome light.

11. REMOVAL OF ROOF LID REGULATOR ASSEMBLY

Refer to P.23-67.

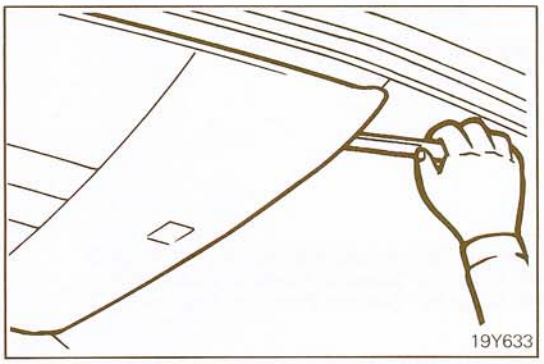

13. REMOVAL OF HEADLINING

(1) Remove the mounting screws at the rear edge of the headlining.
(2) Insert the trim stick into the gap between the body and the headlining from the front of the headlining, then pry downward to remove the retainers.

SERVICE POINT OF INSTALLATION

11. INSTALLATION OF ROOF LID REGULATOR ASSEMBLY / 10. ROOF LID GLASS

Refer to P.23-67.

SEATS

N23UEAH

REMOVAL AND INSTALLATION

Front seat

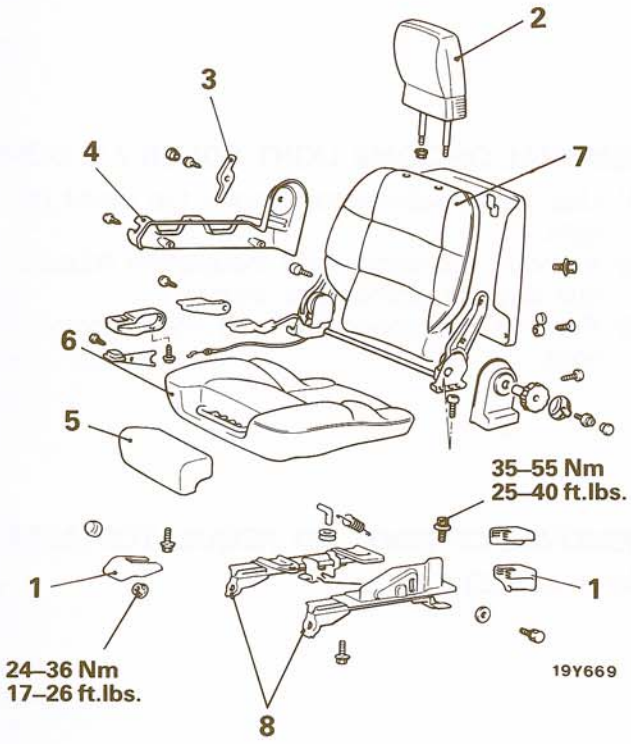

Rear seat

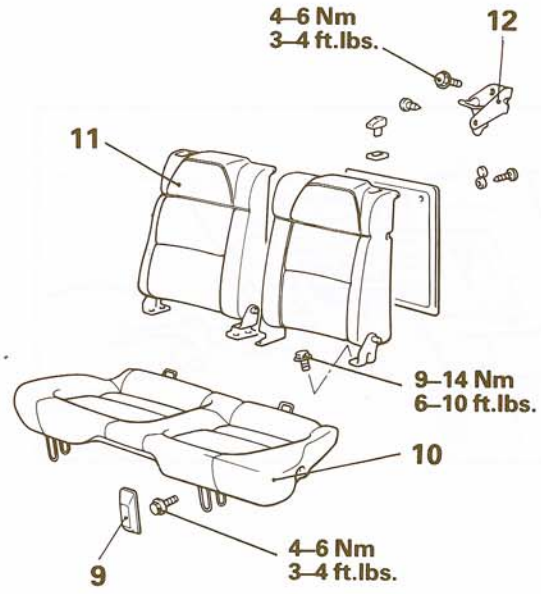

Front seat removal steps

- ◆◆ 1. Cover
- 2. Head restraint
- 3. Fall down lever
- 4. Cushion shield
- 5. Thigh support
- 6. Front seat cushion
- 7. Front seat back
- ◆◆ 8. Seat adjuster

Rear seat removal steps

- ◆◆ 9. Cover
- ◆◆ 10. Rear seat cushion
- ◆◆ ◆◆ 11. Rear seatback
- 12. Striker

NOTE
(1) Reverse the removal procedures to reinstall.
(2) ◆◆: Refer to "Service Points of Removal".
(3) ◆◆: Refer to "Service Points of Installation".

19Y670

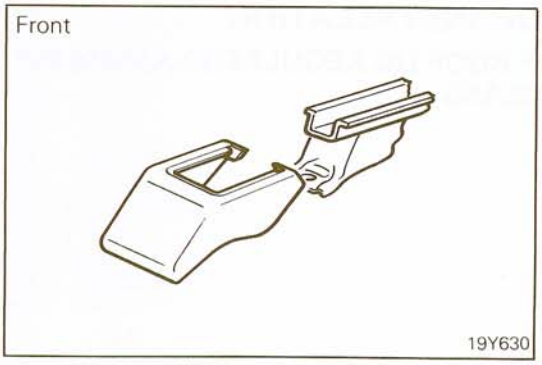

SERVICE POINTS OF REMOVAL

1. 9. REMOVAL OF COVER

(1) Disconnect the seat-belt indication light connector located beneath the front seat on the driver's side.
(2) While pushing open the end of the front and rear seat anchor covers to the outside, pull out the covers.

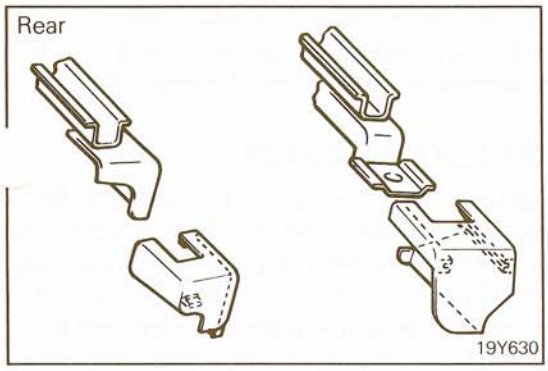

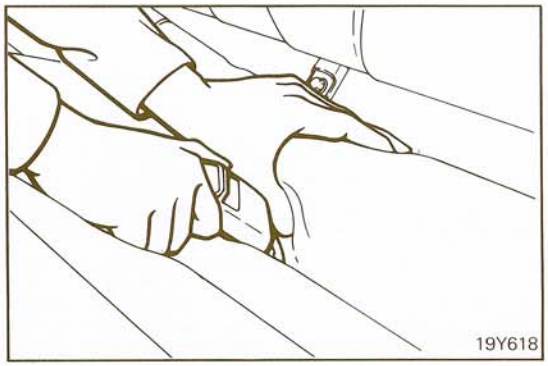

10. REMOVAL OF REAR SEAT CUSHION

(1) Remove the mounting bolts at the front of the seat cushion.
(2) Lift up the seat cushion, and then pull out the rear seat belts (backbone side) through the hole in the cushion.
(3) Remove the seat cushion.

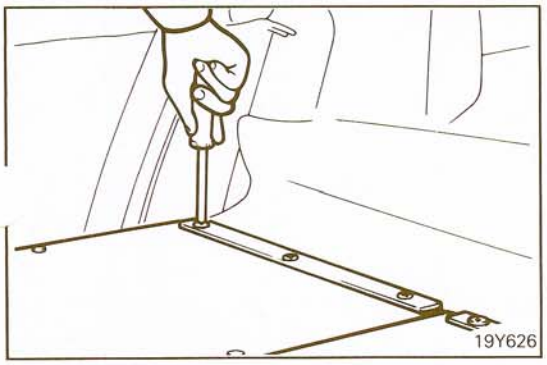

11. REMOVAL OF REAR SEATBACK

(1) Fold down the seatbacks, and then remove the carpet cover screws which fasten both the trunk room floor mat and the lower part of the seatbacks.
(2) Raise the seatbacks and then lock them so that they do not fold down.

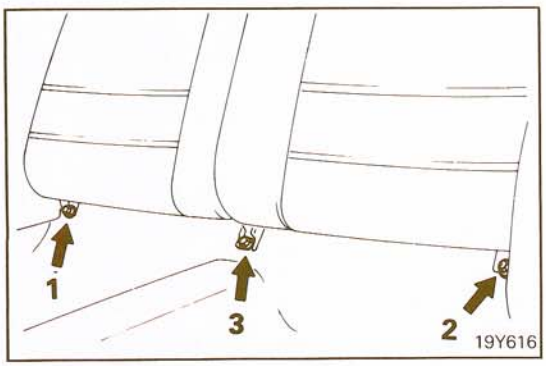

(3) Remove the seatback mounting bolts in the order indicated in the illustration.
(4) Release the left and right seatback locks, and then remove both seatbacks simultaneously.

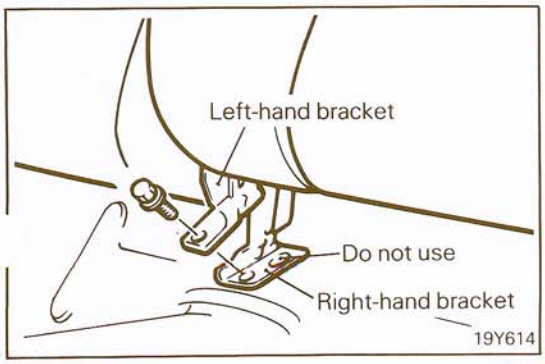

SERVICE POINTS OF INSTALLATION

11. INSTALLATION OF REAR SEATBACK

(1) When assembling and installing the left and right seatbacks, the right-hand bracket should be on the bottom (the left-hand bracket should be on the top).
(2) Tighten the left and right brackets together.
(3) If there are two different size holes in the seatback mounting brackets, use the smaller hole.

(4) Temporarily tighten each mounting bolt, confirm that both seatbacks fold up and down properly and that the locks function correctly, and then tighten the bolts securely.

8. INSTALLATION OF SEAT ADJUSTER

Install the seat adjuster in the position farthest back (because of the positioning bolts on the body) from the front. At this time, first temporarily tighten the mounting nuts and bolts, confirm that the lock of the adjuster functions correctly and the adjuster opertes back and forth correctly, and then tighten the nuts and bolts securely.

SEAT BELTS

N23UGAG

AUTOMATIC SEAT BELTS

The Automatic Seat Belts are designed to automatically wrap themselves around the driver and front passenger as they get into the car and close the door, thereby protecting them from second collisions during a front-end crash or similar accident. The Seat Belts consist of a shoulder belt with emergency release mechanism, manual lap belt, knee protector, and other components.

CONSTRUCTION

The belt components of the Automatic Seat Belts are the shoulder and lap belts. The shoulder belt, which interlocks the opening and closing of the door, is designed to automatically wrap itself around, or unwrap itself from, the occupant within 2.5 sec.

The lap belt for the driver's seat is provided with the ELR (ELR: Emergency Locking Retractor), and that for the front-passenger's seat with the ELR-ALR* to support the Child Restraint System incorporated into the seat. (*ALR: Automatic Locking Retractor)

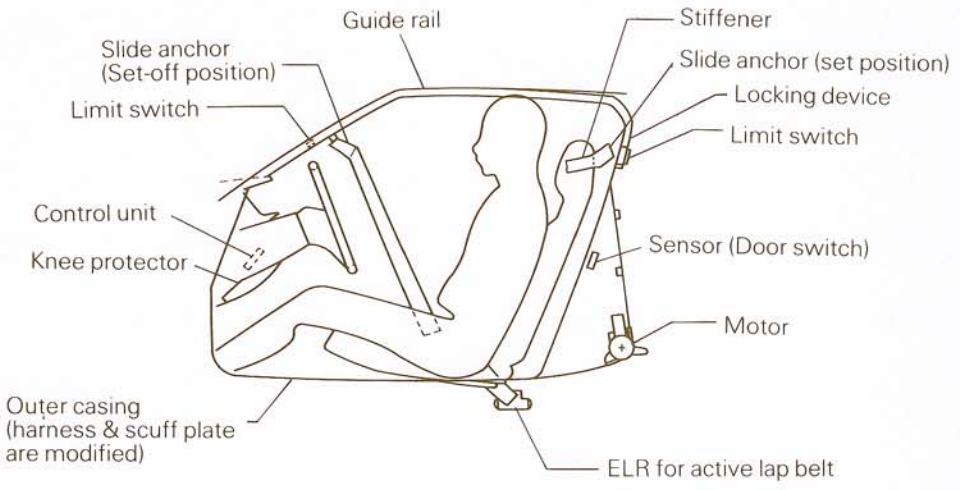

19Y692

The system also has the knee protector that functions to absorb the collision shock.

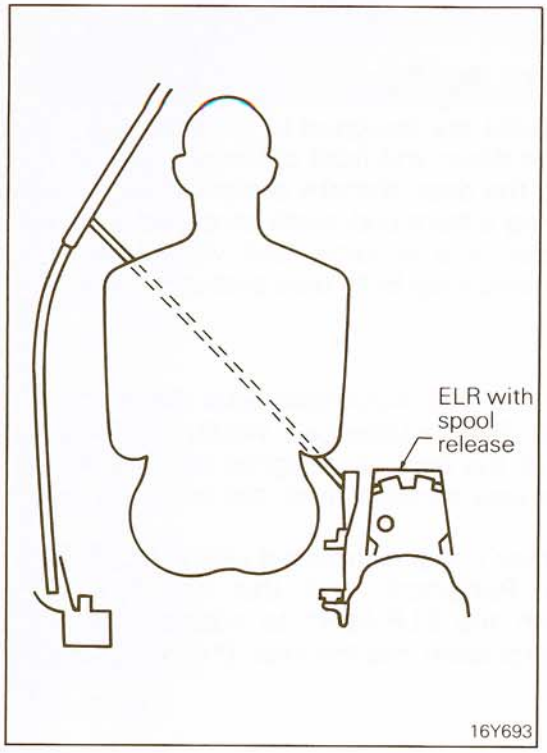

OVERVIEW

The operation of the Automatic Seat Belts is as follows.

(1) The Belts unwrap itself from the occupant when the door is opened with the ignition switch in the ON or OFF positior
(2) The Belts wrap itself around the occupant when the door closed with the ignition switch in the ON position.
(3) The Belts cease to wrap itself around the occupant if the ignition switch is turned OFF during the belt motion.
(4) The spool release lever (indicated as "LIFT FOR EMERGENCY EXIT") fitted to the rear floor console, if pulled when the ELR is locked by a collision shock, causes the ELR to be unlocked allowing the occupant to leave the car or to be rescued from it.
(5) When the body rolls by an accident, the slide anchor moves upward to be locked in position via the locking device. (The longer holes in the tape drive, in mesh with the plastic gear, permits the slide anchor to move upward.)
(6) When a binding load is applied to the belts or slide anchor due to a driver or passenger rushing into or out of the car, it causes the slide anchor to be locked up immediately.
(7) The Seat Belts and door for the driver's and front-passenger's seats operate independently of each other.

THEORY OF OPERATION

Automatic Seat Belt Control Circuit Diagram

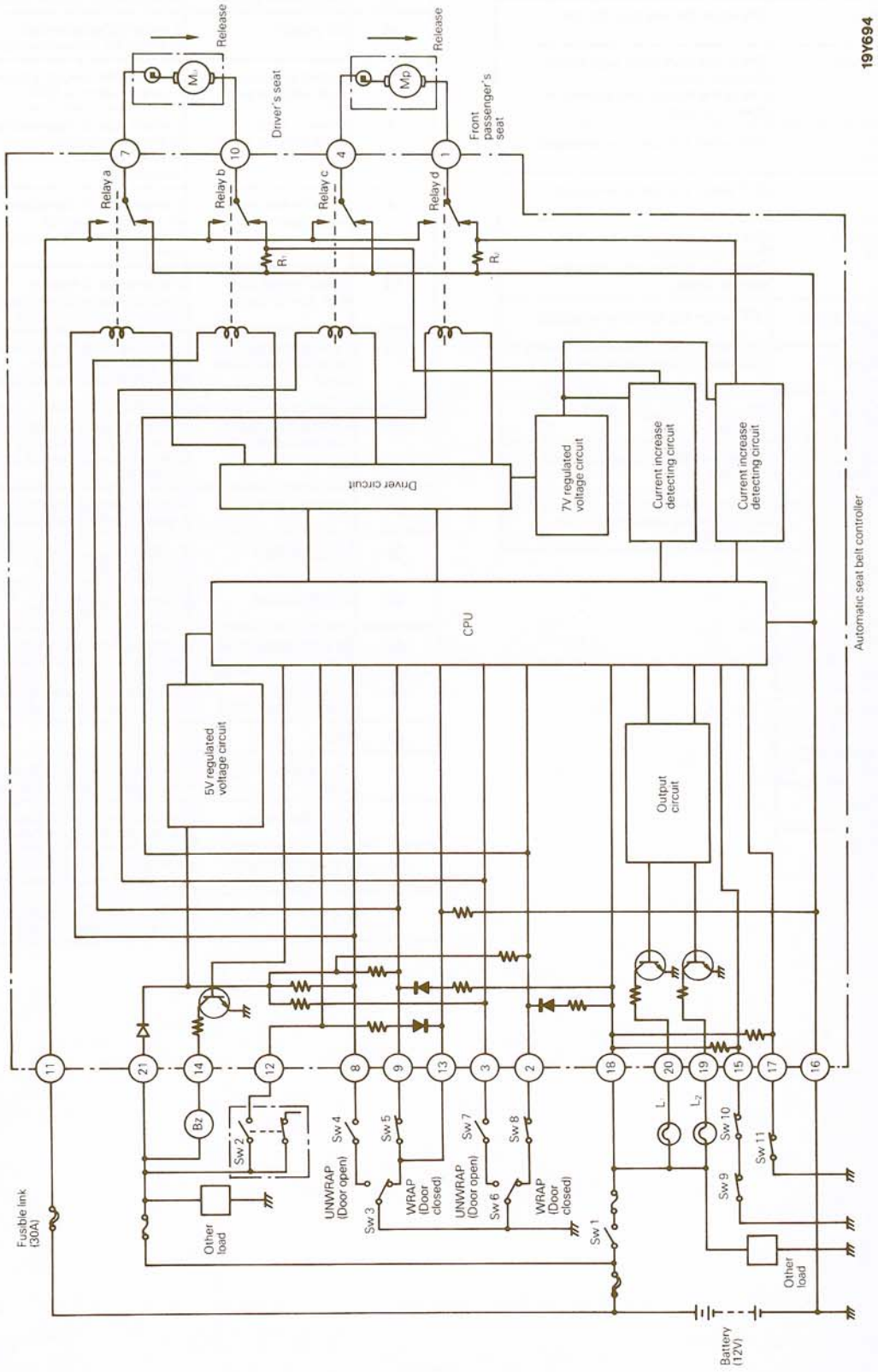

Symbols Used in Circuit Diagram

Symbol	Name	Switch Mode
SW1	Ignition switch	ON when the ignition key is in "ON" or "START" position.
SW2	Steering wheel lock switch	ON while the key is in the slot.
SW3	Driver's seat door lock switch	ON to the UNWRAP side when the door is open. ON to the WRAP side when the door is closed.
SW4	Driver's seat unwrap switch	OFF when the belt is unwrapped.
SW5	Driver's seat wrap switch	OFF when the belt is wrapped.
SW6	Front passenger's seat door lock switch	ON to the unbuckle side when the door is open. ON to the buckle side when the door is closed.
SW7	Front passenger's seat unwrap switch	OFF when the belt is unwrapped.
SW8	Front passenger's seat wrap switch	OFF when the belt is wrapped.
SW9	Driver's seat spool release switch	ON when the spool release lever is pulled.
SW10	Front passenger's seat spool release lever switch	ON when the spool release lever is pulled.
SW11	Driver's seat buckle switch	OFF when the driver's seat lap belt is buckled.
L_1	Warning light "FASTEN BELTS"	
L_2	Warning light "PUSH DOWN BELT RELEASE LEVER"	
BZ	Warning buzzer	
M_D	Driver's seat belts drive motor	
M_P	Front passenger's seat belts drive motor	
R_1	Current detecting resistor	
R_2	Current detecting resistor	

Pin Voltage Level

(Ignition switch ON)

Pin No.	Name	Voltage Level
⑪	Motor power supply	H (equivalent approx. to battery voltage)
㉑	CPU power supply	H (equivalent approx. to battery voltage)
⑭	BZ output	L when BZ is activated; H when BZ is deactivated.
⑫	Steering wheel lock switch input	H when the switch is turned ON; L when switch is OFF.
⑧	Driver's seat belts unwrap input	L when door is open and belt is not in unbuckle position; H when door is closed and belt is unbuckled.
⑨	Driver's seat belts wrap input	L when door is closed and belts are not in unbuckle position; H when door is opened or belt is wrapped.
⑬	Driver's seat door lock switch input	L when door is closed; H when door is closed and steering wheel lock switch is ON.
③	Front passenger's seat belts unbuckle input	L when door is closed and belts are not in unwrap position; H when door is closed or belts are unwrapped.
②	Front passenger's seat belt wrap input	L when door is opened and belts are not in wrap position; H when door is open or belts are wrapped.
⑱	Ignition input	H when ignition switch is turned ON; L when ignition switch is turned OFF.
⑳	L_1 light output	L when L_1 light is ON; H when L_1 light is OFF.
⑲	L_2 light output	L when L_2 light is ON; H when L_2 light is OFF.
⑮	Spool release switch input	L when spool release lever is pulled; H when the lever is pushed.
⑰	Driver's seat buckle switch input	L when driver's seat lap belt is unbuckled; H when the belt is buckled.
⑯	GND	L
⑦	M_D motor unwrap output	H when M_D motor is deenergized; L when the motor is energized.
⑩	M_D motor wrap output	H when M_D motor is energized; L when the motor is deenergized.
④	Mp motor unwrap output	H when the Mp motor is deenergized; L when the motor is energized.
①	Mp motor wrap output	H when Mp motor is energized; L when the motor is deenergized.

STB Revision

1. Ignition Switch Initial Warning

When the ignition switch is turned from OFF to ON, L_1 light (warning light "FASTEN BELTS") lights up and stays lit for approximately 6 seconds and L_2 light (warning light "PUSH DOWN BELTS RELEASE LEVER") lights up and stays lit for approximately 1.5 seconds. The lights go off if the ignition switch is turned OFF during the predetermined period of time.

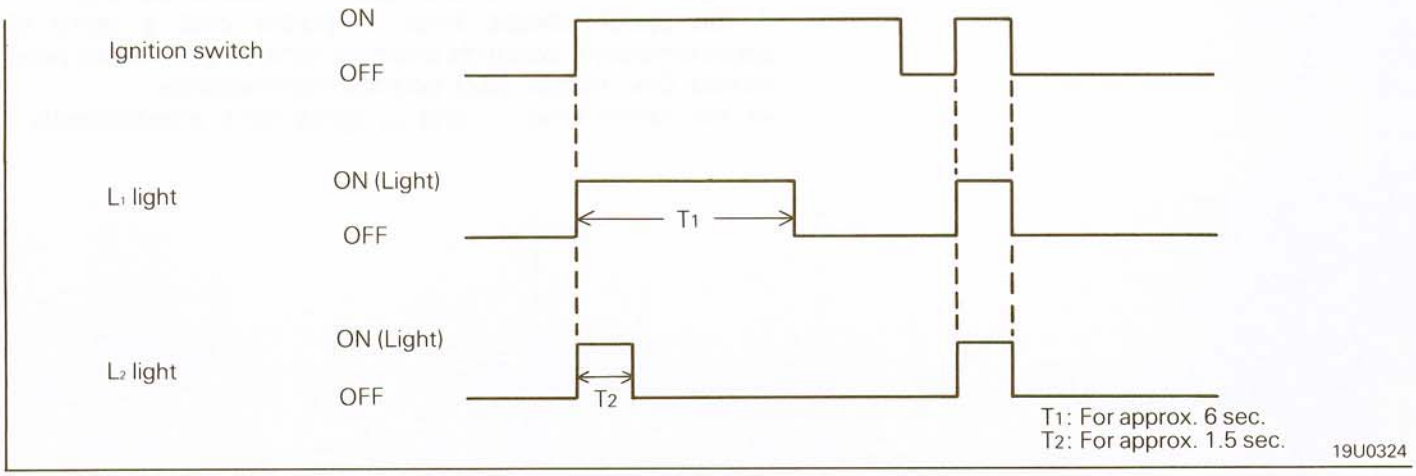

2. Driver's Seat Lap Belt Warning

If the lap belt on the driver's seat is not buckled when the ignition switch is turned ON from the OFF position, buzzer [BZ] is activated for approximately 6 seconds. L_1 light, at the same time, lights up and stays lit for the same period of time.

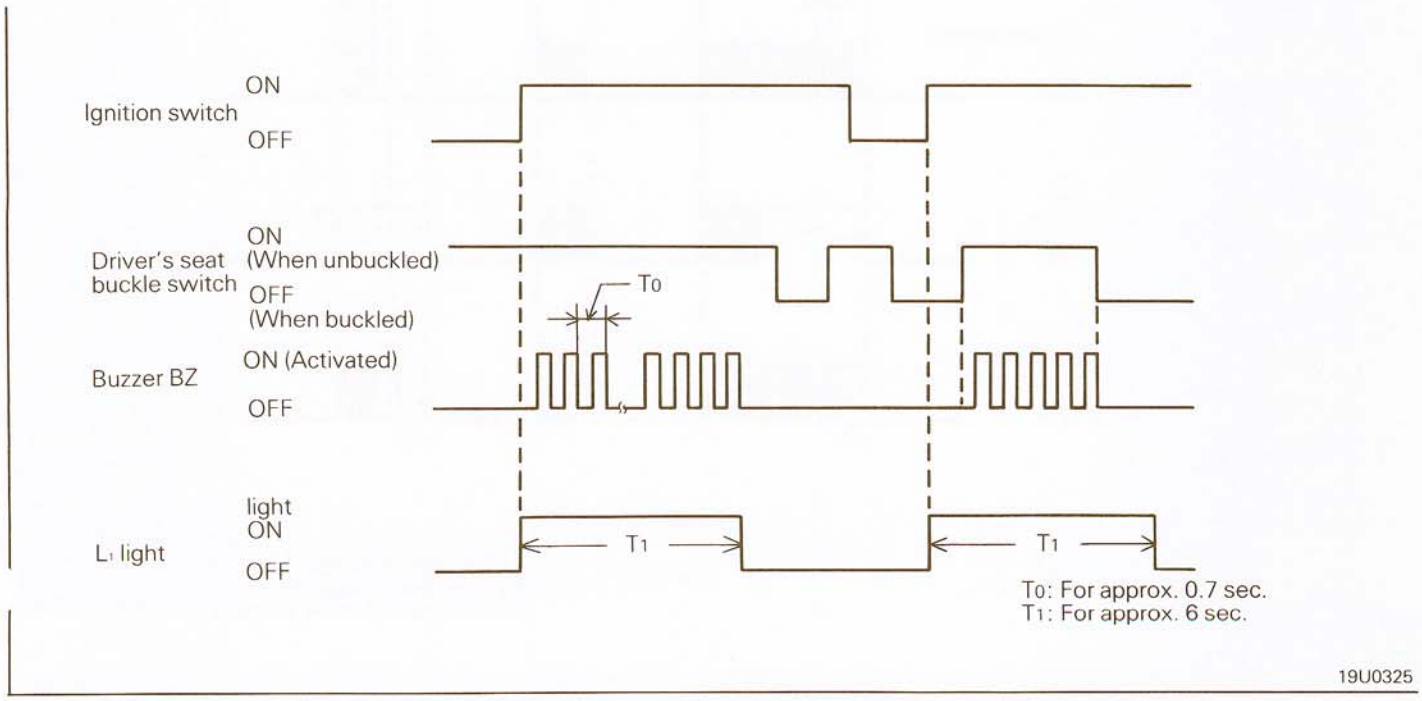

STB Revision

3. Automatic Seat Belt Latch Release Warning

When the ignition switch is turned ON with the spool release lever pulled (spool release switch in OFF position), intermittent buzzer [BZ] sounds.
When the ignition switch is turned ON from the OF position, L_1 light lights up and stays lit for approximately 6 seconds, then starts blinking. L_2 light lights up and stays lit for approximately 1.5 seconds, then starts blinking.
If the spool release lever is pulled with a lapse of approximately 6 seconds after the ignition switch has been turned ON, buzzer [BZ] sounds intermittently.
At the same time, L_1 and L_2 lights blink intermittently.

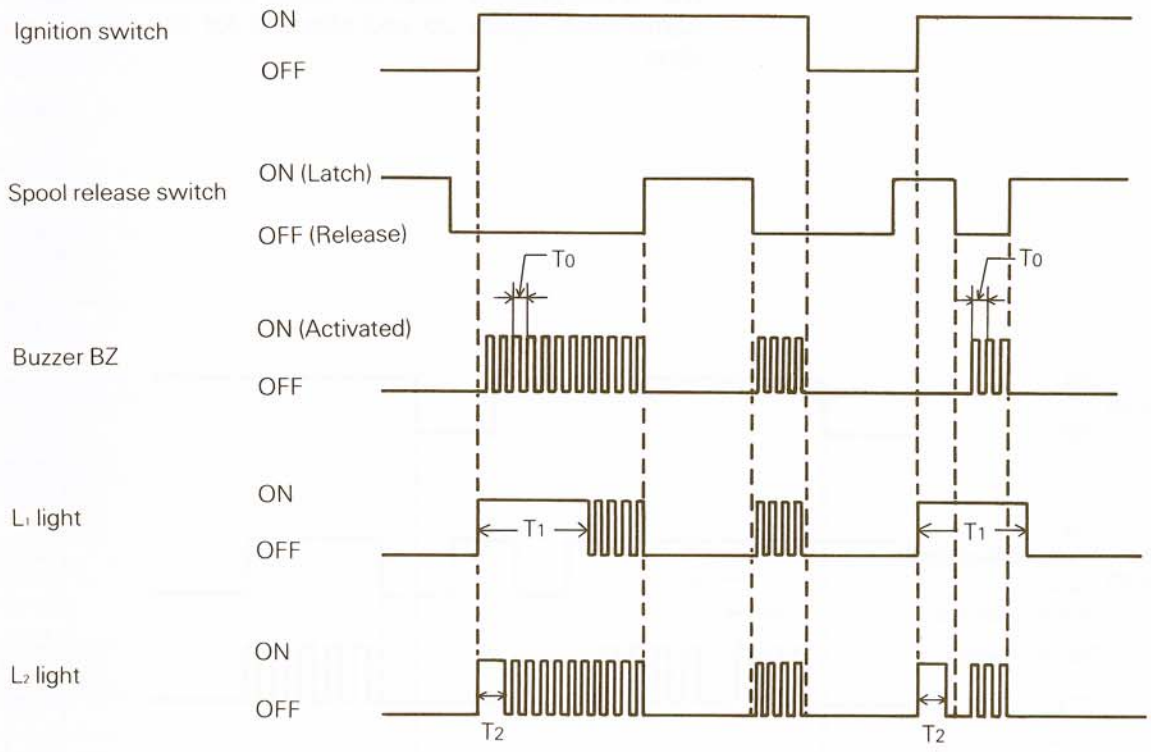

T0: For approximately 0.7 sec.
T1: For approximately 6 sec.
T2: For approximately 1.5 sec.

19U0323

4. Belt Wrapping Motion

(1) If the belt is not in the wrap position (SW3 ON on the Door Closed position; SW5 ON position) when the door is closed with the ignition switch (SW1) in the ON position, the belt automatically moves to the wrap position. For the period between the initiation and completion of the belt's motion in the wrap direction, L_1 light either stays lit or blinks.
From the initiation of the belt's wrapping motion (i.e., from the time when the door is closed), L_1 light stays lit for approximately 6 seconds, then blinks for another approximately 3 seconds.

(2) With a lapse of approximately 60 seconds after the belt has stopped its wrapping motion due to foreign object wedged in the mechanism, the protective timer of the CPU is activated causing the motor output to be cut off.
The circuit description of this operation is as follows:
When SW3 is turned ON to the Door Closed position, a Door Closed signal is input to the CPU, which causes a driver drive signal to be output via the driver circuit from the CPU, closing the relay b to the Belt Wrap side. As a result, a HIGH signal (wrap motion signal, 12 V) is applied to the coil of relay b by the driver circuit, closing relay b contacts to energize motor M_D. This completes the belt's wrapping motion.
When the belt completes its wrapping motion, SW5 is turned OFF, which cuts off the current flowing to the relay coil. As a result, relay b is deactuated shutting off the motor current.
The output of the driver circuit then drops from HIGH to LOW.
The same operation is also true with the belt on the front passenger's seat.

5. Belt Unwrapping Motion

(1) When the door is opened, SW3 (Driver's seat door lock switch) is turned ON to the Unwrap side regardless of whether the ignition switch is in the ON or OFF position. This actuates SW4 (Driver's seat belt unwrap switch) causing the belt to move in the unwrapping direction. SW4 is deactuated when the belt completes its unwrapping motion.
The buzzer on the instrument panel sounds for approximately 0.7 seconds since the start of the belt's motion.

(2) If the belt is still in the process of unwrapping with a lapse of approximately 60 seconds after the start of motion, the protective timer in CPU is activated causing the motor output to be shut off.

6. Belt Unwrap Position

When the belt is not in the unwrap position, SW4 (Driver's seat belt unwrap switch) is in the ON position. When SW3 is turned ON to the Door Open position, a Door Open signal is input to the CPU, which causes a driver drive signal to be output via the driver circuit from the CPU, closing the relay a to the Belt Unwrap side. As a result, a HIGH signal (unwrap motion signal, 12 V) is applied to the coil of relay a by the driver circuit, closing relay a contacts to energize motor M_D. This completes the belt's unwrapping motion.

When the belt completes its unwrapping motion, SW4 is turned OFF, which cuts off the current flowing to the relay coil. As a result, relay a is deactuated shutting off the motor current. The output of the driver circuit then drops from HIGH to LOW.

The same operation is also true with the belt on the front passenger's seat.

7. Emergency Stop

(1) If a shock is applied to the belt anchor or a sudden tension force is applied to the shoulder belt during the belt unwrapping motion, a motor current will increase. This increase in the motor current (approximately 5 A or more within approximately 0.4-sec. interval) is detected by the current increase detecting circuit installed between the CPU and relay circuit and the detecting circuit causes relay a to be turned OFF, thus temporarily halting the belt's unwrapping motion for approximately 1.7 seconds. This is called the emergency stop.
During this period of emergency stop (for approximately 1.7 seconds), the buzzer on the instrument panel keep sounding. Then, the circuit resets to allow the belt to restart its unwrapping motion.

(2) The number of emergency stops made until the belt reaches its unwrap position is three. The fourth or more emergency stop will not be made even when a shock is applied. The emergency stop count is reset to 0 once the belt reaches its unwrap position.

(3) If the door is closed during an emergency stop being under way, that particular emergency stop is canceled to bypass the belt unwrapping mode. The belt unwrapping mode refers to a series of operation mode in which the belt unwrapping motion is temporarily halted by the emergency stop, the circuit resets, and the belt resumes its unwrapping motion.

(4) The emergency stop is not activated for an approximately 0.6-sec. interval from the start of the belt's unwrapping motion after the door has been opened. The emergency stop is activated and deactivated for the belt on the driver's seat independently of that on the front passenger's seat.

8. Key Reminder

When the door lock switch on the driver's side door is turned OFF from ON position (close → open), the buzzer will sound without interruption in case the steering lock switch is ON (key inserted in key cylinder) and the ignition switch (IG1) is in OFF position.

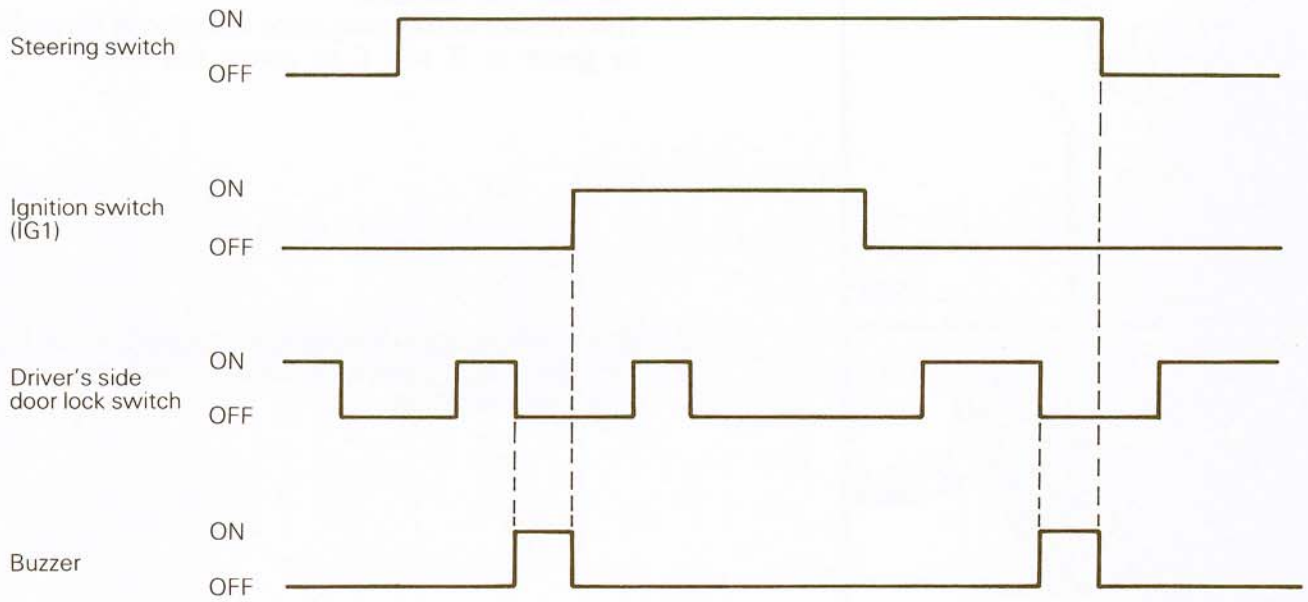

9. Operation of ELR-ALR Equipped Belt for Front Passenger Seat

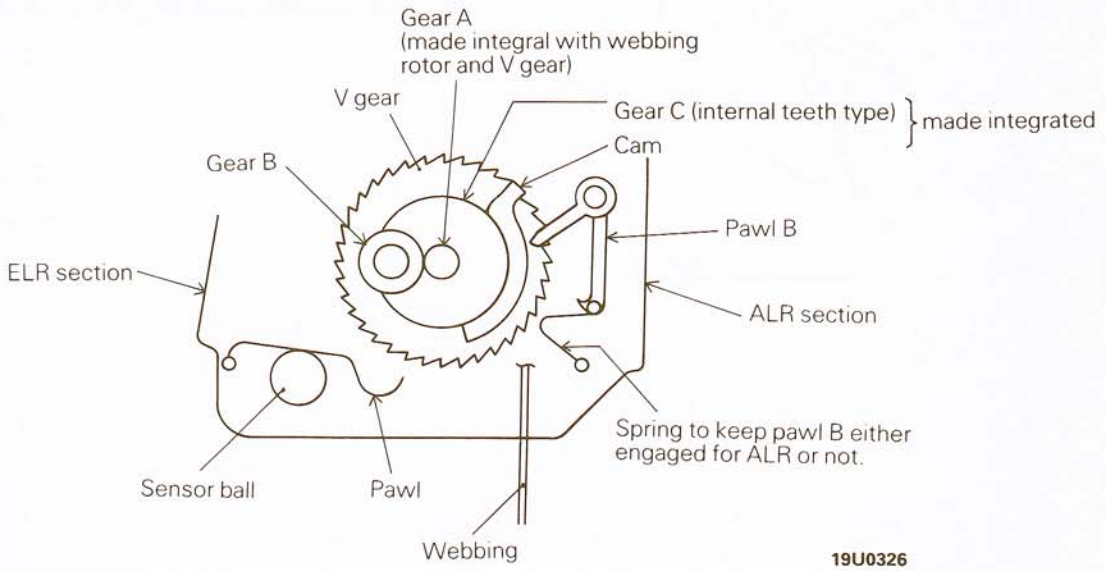

(1) ELR

The webbing is locked when the G-sensor senses an abrupt deceleration of vehicle. The sensor ball is moved by the inertia and pushes the pawl up to lock the V-gear (ratchet wheel), thus preventing the webbing fr extracting.

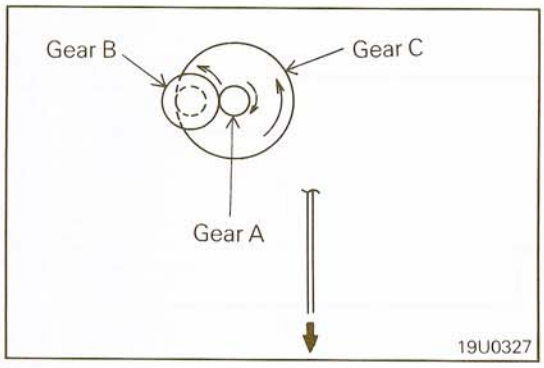

(2) ALR

1. Pull out the webbing.
   The number of webbing rotor revolutions is reduced by gears A, B and C to rotate the cam.

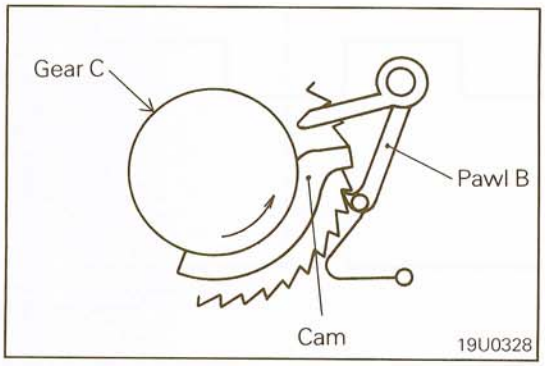

2. When the webbing has been extended almost fully, the cam strikes pawl B to engage it with V gear and locks the webbing.

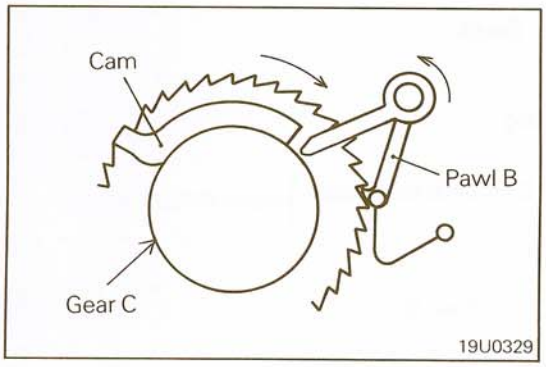

3. Then, retract the webbing. When it has been retracted almost fully, the cam returns pawl B to its original position, bringing the system into ELR state.

INSPECTION FOR AUTOMATIC SEAT BELTS

Division	Inspection procedure		Decision		Possible cause	Remedy
	Condition	Inspection item	Pass	Failure		
INPUT CHECK PROCEDURES	Connect the battery terminals properly.	Voltage of the motor power supply (Pin 11 of the Circuit Diagram)	B voltage	0 V	Blown fuse	Replace fuse (30 A).
					Broken harness	Correct harness.
	Turn ON the ignition switch.	Ignition input voltage (Pin 18 of Circuit Diagram)	B voltage	0 V	Blown fuse	Replace fuse.
					Defective ignition switch	Replace the switch.
					Defective harness	Correct harness.
	Connect the battery terminals properly.	Voltage of CPU power supply (Pin 21 of Circuit Diagram)	B voltage	0 V	Blown fuse	Replace fuse.
					Defective harness	Correct harness.
	Insert the ignition key. (Key in LOCK position) Keep the driver's side door open.	Steering wheel lock switch input voltage (Pin 12 of Circuit Diagram)	B voltage	0 V	Defective steering wheel lock switch	Replace the switch.
					Harness short-circuited	Correct harness.
	Turn ON the ignition switch. Open the driver's side door to cause an unwrapping motion of shoulder belt. (Driver's side door lock switch: ON to UNWRAP side; Driver's belt unwrap switch: ON) Make a check while the shoulder belt is in motion.	Driver's side door lock switch, driver's belt unwrap switch (Pin 8 of Circuit Diagram)	0 V	B voltage	Defective driver's side door lock switch	Replace the switch.
					Defective harness	Correct harness.
					Defective driver's belt unwrap switch	Replace the switch.
	Turn ON the ignition switch. Close the driver's side door to cause a wrapping motion of shoulder belt. (Driver's side door lock switch: ON to WRAP side; Driver's belt wrap switch: ON) Make a check while the shoulder belt is in motion.	Driver's side door lock switch, driver's belt wrap switch (Pin 9 of Circuit Diagram)	0 V	B voltage	Defective driver's side door lock switch	Replace the switch.
					Defective driver's belt wrap switch	Replace the switch.
					Defective harness	Correct harness.
	Turn ON the ignition switch. Open the front passenger's side door to cause an unwrapping motion of shoulder belt. (Front passenger's side door lock switch: ON to UNWRAP side; Front passenger's belt unwrap switch: ON) Make a check while the shoulder belt is in motion.	Front passenger's side door lock switch, front passenger's belt unwrap switch (Pin 3 of Circuit Diagram)	0 V	B voltage	Defective front passenger's side door lock switch	Replace the switch.
					Defective front passenger's belt unwrap switch	Replace the switch.
	Turn ON the ignition switch. Close the front passenger's side door to cause a wrapping motion of shoulder belt. (Front passenger's side door lock switch: ON to WRAP side; Front passenger's belt wrap switch: ON) Make a check while the shoulder belt is in motion.	Front passenger's side door lock switch, front passenger's belt wrap switch (Pin 2 of Circuit Diagram)	0 V	B voltage	Defective front passenger's side door lock switch	Replace the switch.
					Defective front passenger's belt wrap switch	Replace the switch.
					Defective harness	Correct harness.

Division	Inspection procedure			Decision		Possible cause	Remedy
	Condition	Inspection item		Pass	Failure		
INPUT CHECK PROCEDURES	Turn ON the ignition switch. Return the spool release lever to its original position. (Both spool release switches for driver's and front passenger's seats: ON)	Spool release switches (Pin 15 of Circuit Diagram)		0 V	B voltage	Defective spool release lever	Replace the spool release lever.
						Defective spool release switch	Replace the switch.
						Defective harness	Correct harness.
	Turn ON the ignition switch. Lap belt unwrapped	Driver's seat belt buckle switch (Pin 17 of Circuit Diagram)		0 V	B voltage	Defective buckle	Replace buckle.
						Defective buckle switch	Replace the switch.
						Defective harness	Correct harness.
	Turn ON the ignition switch.	Ground earth condition (Pin 16 of Circuit Diagram)		0 V	B voltage	Defective wire harness	Correct wire harness.
						Improper grounding	Check and adjust the body ground circuit.
OUTPUT CHECK PROCEDURES	Turn ON the ignition switch. Close the driver's side door to cause a wrapping motion of shoulder belt. (Driver's side door lock switch: ON to WRAP side; Driver's belt wrap switch: ON) Make a check while the shoulder belt is in motion.	M_D motor operation (Pins 10 and 7 of Circuit Diagram)	M_D motor wrap output (10)	B voltage	0 V	Defective M_D motor wrap output	Check the motor wrap output circuit relay, and replace if defective.
			M_D motor unwrap output (7)	0 V	B voltage	Defective M_D motor unwrap output	Check the motor unwrap output circuit relay, and replace if defective.
	Turn ON the ignition switch. Open the driver's door to cause an unwrapping motion of shoulder belt. (Driver's side door lock switch: ON to WRAP side; Driver's belt unwrap switch: ON) Make a check while the shoulder belt is in motion.	M_D motor operation (Pins 7 and 10 of Circuit Diagram)	M_D motor unwrap output (7)	B voltage	0 V	Defective M_D motor unwrap output	Check the motor unwrap output circuit relay, and replace if defective.
			M_D motor wrap output (10)	0 V	B voltage	Defective M_D motor wrap output	Check the motor wrap output circuit relay, and replace if defective.
	Turn ON the ignition switch. Close the front passenger's side door to cause a wrapping motion of shoulder belt. (Front passenger's side door lock switch: ON to WRAP side; Front passenger's belt wrap switch: ON) Make a check while the shoulder belt is in motion.	Mp motor operation (Pins 1 and 4 in Circuit Diagram)	Mp motor wrap output (1)	B voltage	0 V	Defective Mp motor wrap output	Check the motor wrap output circuit relay, and replace if defective.
			Mp motor unwrap output (4)	0 V	B voltage	Defective Mp motor unwrap output	Check the motor unwrap output circuit relay, and replace if defective.
	Turn ON the ignition switch. Open the front passenger's side door to cause an unwrapping motion of shoulder belt. (Front passenger's side door lock switch: ON to UNWRAP side; Front passenger's belt unwrap switch: ON) Make a check while the shoulder belt is in motion.	Mp motor operation (Pins 4 and 1 of Circuit Diagram)	Mp motor unwrap output (4)	B voltage	0 V	Defective Mp motor unwrap output	Check the motor unwrap output circuit relay, and replace if defective.
			Mp motor wrap output (1)	0 V	B voltage	Defective Mp motor wrap output	Check the motor wrap output circuit relay, and replace if defective.

NOTE
1. The above table shows the inspection methods without disconnecting the wiring harness.
2. Connect the right terminal into the right place and make sure of the correct polarity of the battery when measuring the terminal voltages and conducting a continuity test of switches.
3. The check to be made while the shoulder belt is in motion assumes the case where the system is normally operating. However, the check is also possible even when the belt does not come in motion.

REMOVAL AND INSTALLATION (FRONT)

Pre-removal Operation
- Headlining
- Front Pillar Trim
- Roof Side Trim
- Upper Quarter Trim
- Wrap Round Trim
- Quarter Trim
- Scuff Plate
  (Refer to P.23-86.)

Post-installation Operation
- Headlining
- Front Pillar Trim
- Roof Side Trim
- Upper Quarter Trim
- Wrap Round Trim
- Quarter Trim
- Scuff Plate
  (Refer to P.23-86.)

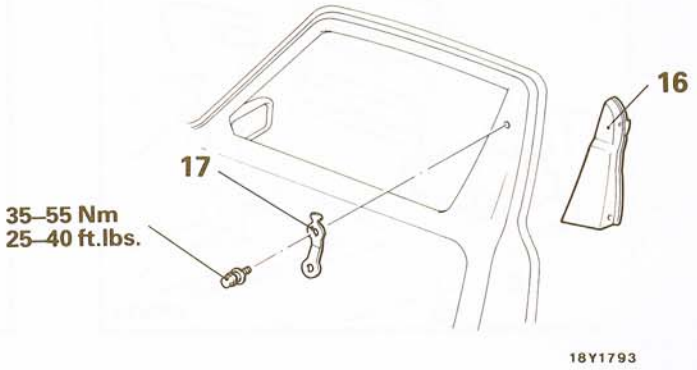

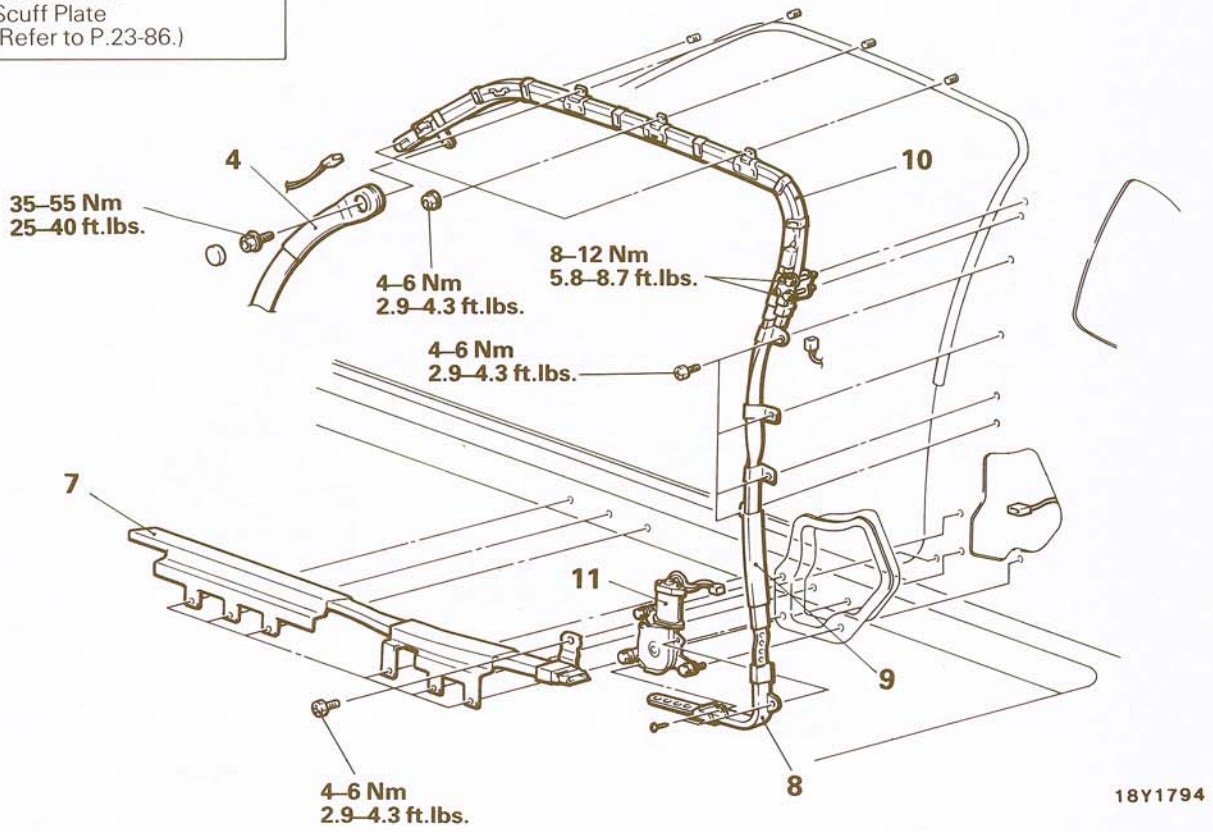

Driving device assembly removal steps

1. Buckle
2. Front seat
3. Buckle switch connector connection (driver's side only)
4. Anchor plate connection
5. Retractor (for lap belt)
6. Driving device assembly (Parts from step 7 to step 10)
7. ◆◆ ◆◆ Outer casing (B)
8. ◆◆ Tape guide
9. Outer casing (A)
10. Rail guide
11. Motor

NOTE
(1) Reverse the removal procedures to reinstall.
(2) ◆◆: Refer to "Service Points of Removal".
(3) ◆◆: Refer to "Service Points of Installation".

STB Revision

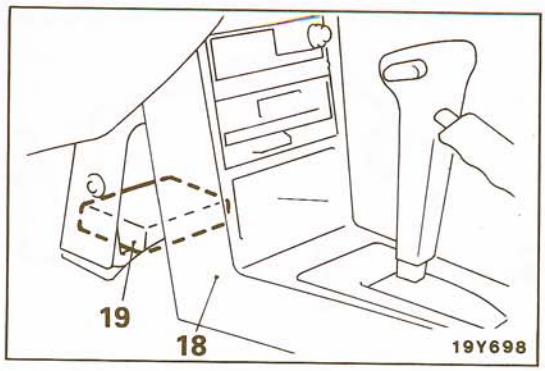

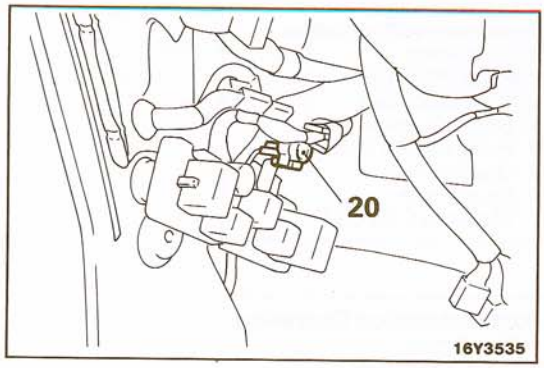

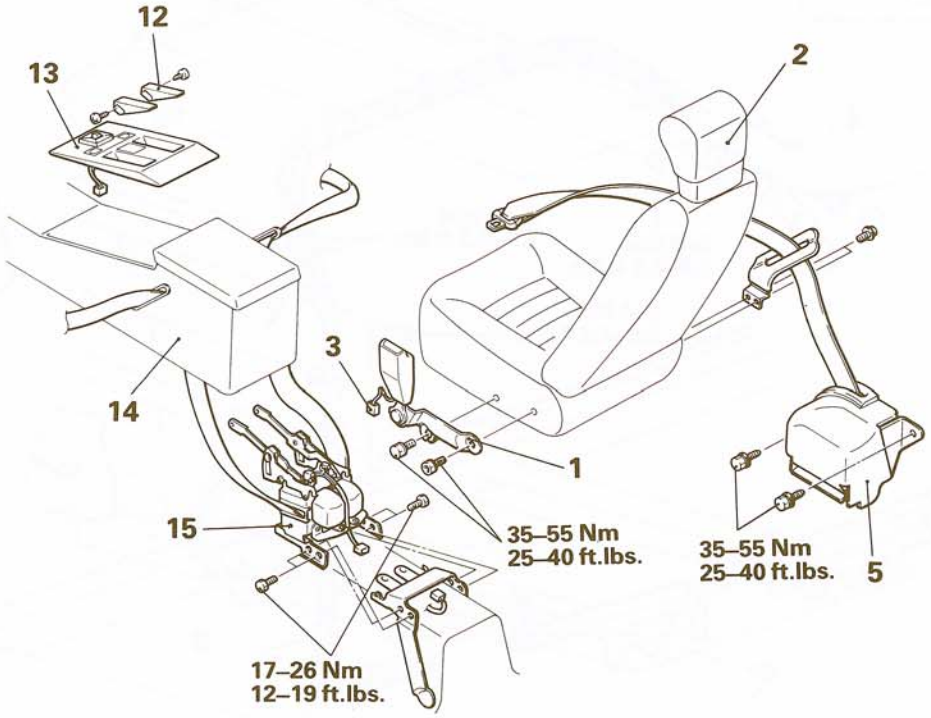

Shoulder belt removal steps

4. Anchor plate connection
12. Spool release lever
13. Rear console cover
◆◆ ◆◆ 14. Rear console box
◆◆ 15. Retractor (for shoulder belt)

Shoulder sub anchor removal steps

◆◆ 16. Door sash trim
17. Shoulder sub anchor

Automatic seat belt control unit removal steps

◆◆ ◆◆ 18. Floor console
19. Automatic seat belt control unit

Circuit breaket removal

20. Circuit breaker

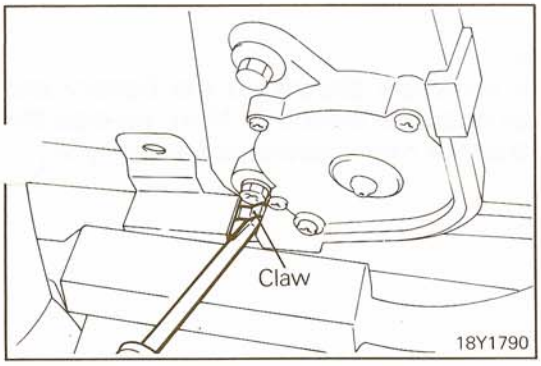

SERVICE POINTS OF REMOVAL

7. REMOVAL OF OUTER CASING (B)

Raise the claw of the outer casing (B) and disconnect the outer casing (A) from the tape guide. Then, with the tape pulled all the way out, remove the outer casing (B).

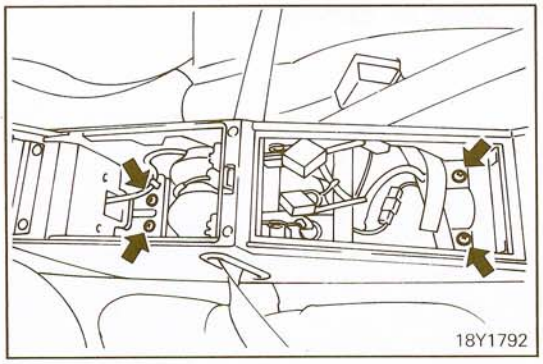

14. REMOVAL OF REAR CONSOLE BOX

Remove the inner box cover and remove the rear console box attaching screws shown. Then, remove the rear console box.

16. REMOVAL OF DOOR SASH TRIM

Refer to P.23-52.

18. REMOVAL OF FLOOR CONSOLE

Refer to P.23-84.

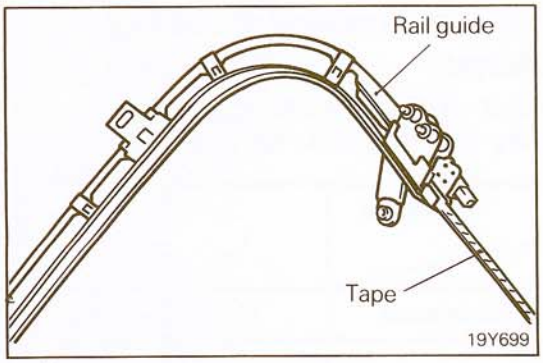

INSPECTION

RAIL GUIDE

(1) Check the tape moves smoothly and does not catch when pulled and pushed.
If not, check the guide rail for foreign particles.

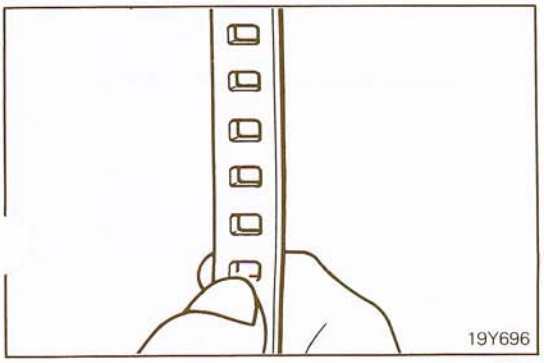

(2) Check the tape for wear or damage.

Caution
Do not wipe off the grease and take care not to soil the tape.

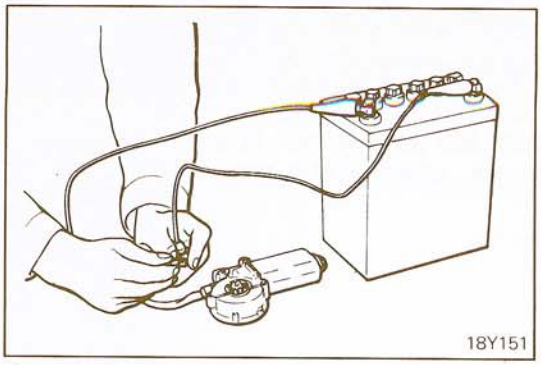

MOTOR

(1) Remove the motor.
(2) Connect the motor terminals directly to the battery and check that the motor operates smoothly. Next, reverse the polarity and check that the motor operates smoothly in reverse direction.

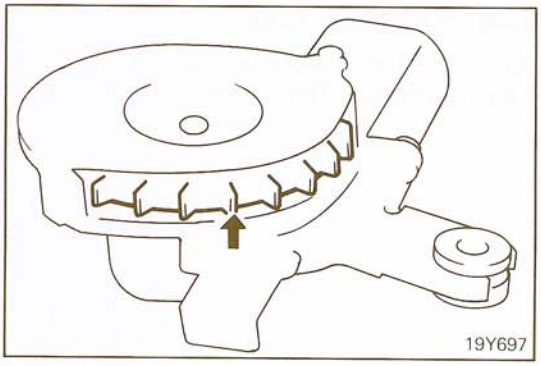

(3) Check the gear for wear or damage.

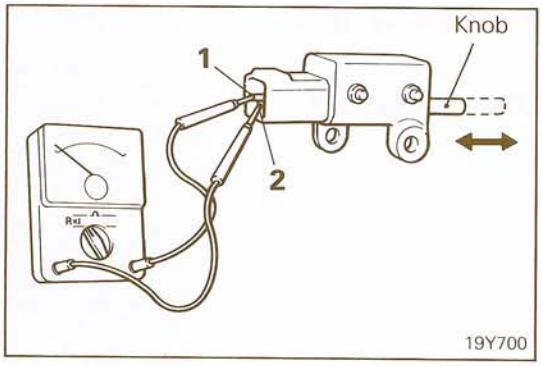

LIMIT SWITCH

(1) Remove the limit switch.
(2) Check the continuity between the terminals.

Condition \ Terminal	1	2
Release the limit switch knob	○	○
Push the limit switch knob		

NOTE
○–○ indicates that there is continuity between the terminals.

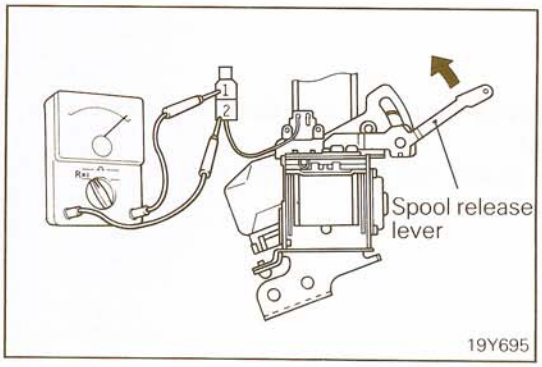

SPOOL RELEASE SWITCH

(1) Disconnect the spool release switch connector.
(2) Check the continuity between the terminals.

Condition \ Terminal	1	2
Spool release lever does not operate	○	○
Spool release lever lift up		

NOTE
○–○ indicates that there is continuity between the terminals.

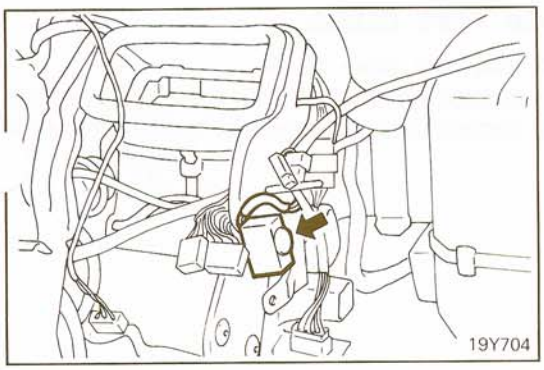

BUZZER

(1) Remove the buzzer from the center reinforcement.

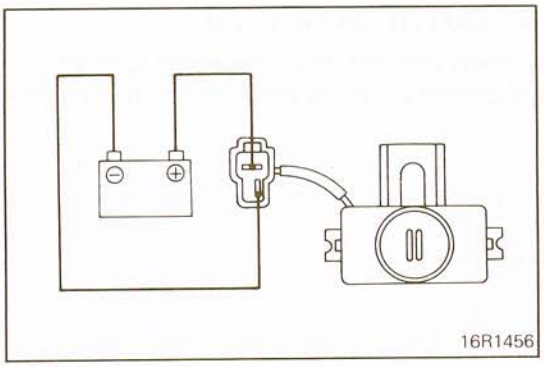

(2) Check that buzzer sounds when battery voltage is applied to the buzzer terminal.

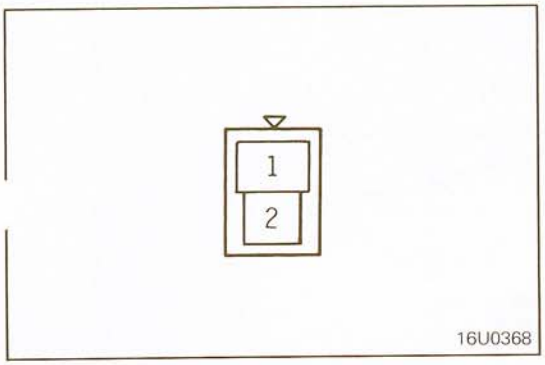

BUCKLE SWITCH

(1) Disconnect the buckle switch connector (L.H. only).
(2) Check the continuity between the terminals.

Terminal	1	2
Buckle unlock	○	○
Buckle lock		

NOTE
○–○ indicates that there is continuity between the terminals.

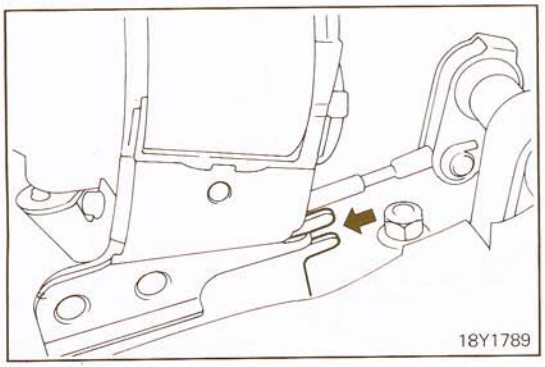

SERVICE POINTS OF INSTALLATION

18. INSTALLATION OF FLOOR CONSOLE

Refer to P.23-81.

15. INSTALLATION OF RETRACTOR (FOR SHOULDER BELT)

When installing the retractor, make sure that the retractor locking tab fits into bracket hook as illustrated.

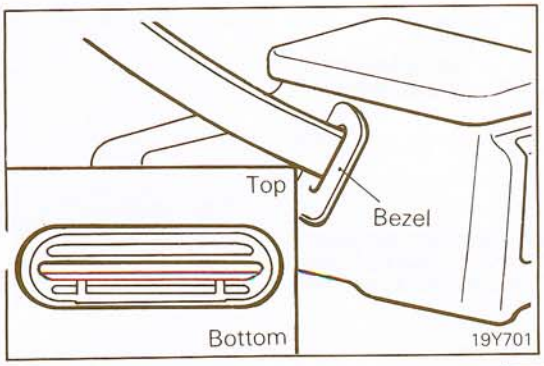

14. INSTALLATION OF REAR CONSOLE BOX

When passing the shoulder belt out through the bezel of console box after the rear consle box has been installed, ensure that the bezel is positioned with correct top-to-bottom orientation and the belt is not twisted inside the console box.

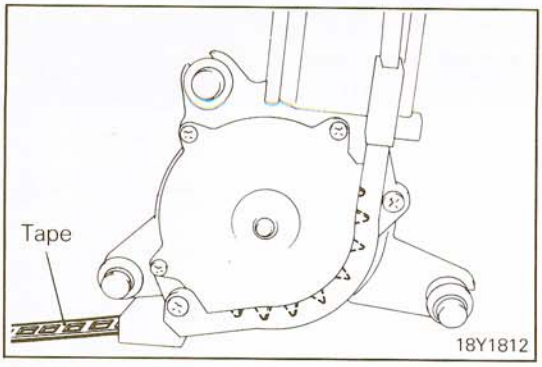

8. INSTALLATION OF TAPE GUIDE

(1) Pass the tape into the tape guide.
(2) Mesh the hole in tape with the motor gear with proper tension. Then, mount the tape guide to the motor.

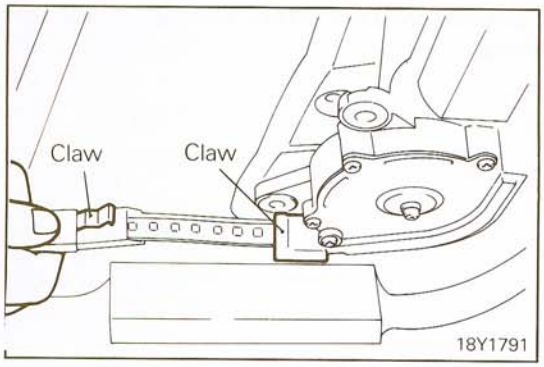

7. INSTALLATION OF OUTER CASING (B)

After the tape has been passed into the outer casing (B), insert until the outer casing (B) claw catches the tape guide claw.

REMOVAL AND INSTALLATION (REAR)

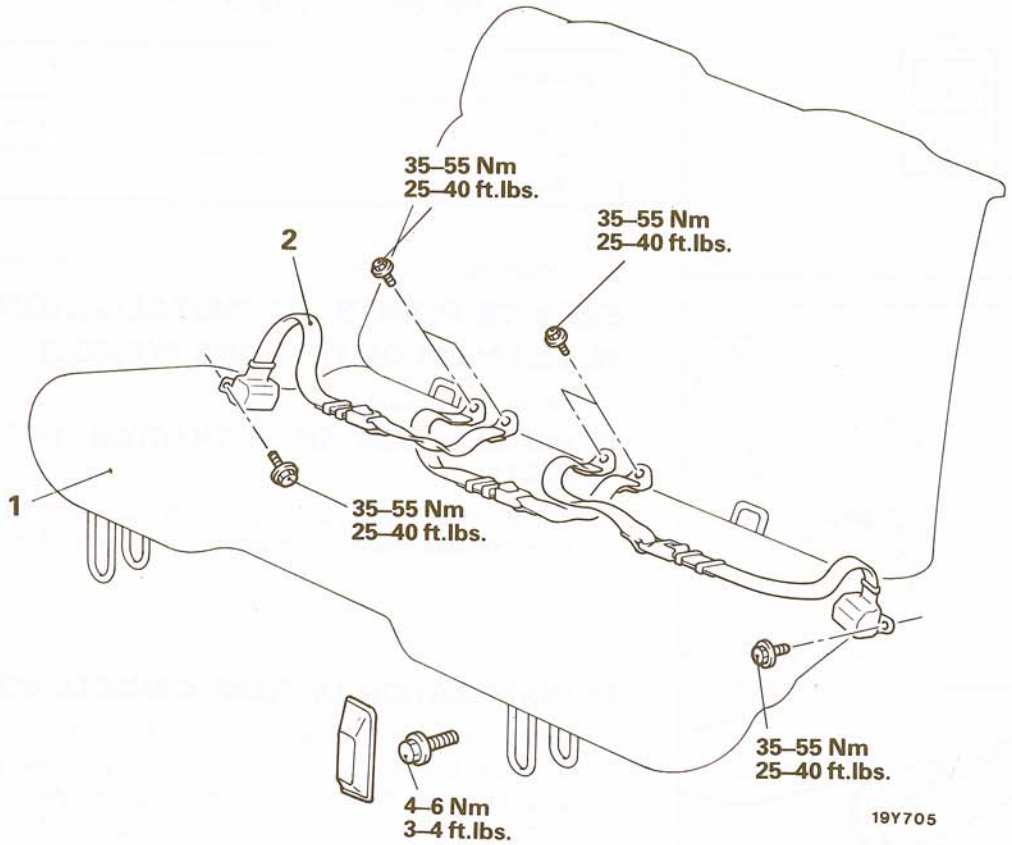

Removal steps

1. Rear seat cushion
◆◆ ◆◆ 2. Rear seat belt

NOTE
(1) Reverse the removal procedures to reinstall.
(2) ◆◆: Refer to "Service Points of Removal".
(3) ◆◆: Refer to "Service Points of Installation".

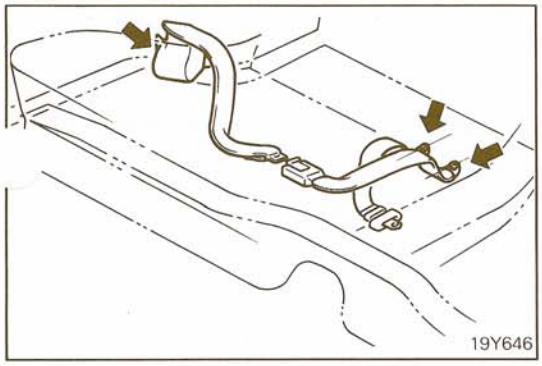

SERVICE POINT OF REMOVAL

2. REMOVAL OF REAR SEAT BELT

Remove the rear seat belt.

NOTE
Special bolts (inch-size) are used for the seat belt mounting bolts.

SERVICE POINT OF INSTALLATION

2. INSTALLATION OF REAR SEAT BELT

Position the anchor plates by using the following procedure, and then secure the plates with the bolts.

(1) Install the plates at the center of the vehicle so that the belts are parallel to the vehicle center line.
(2) Install the anchor plates at the sides of the vehicle with retractor vertical.

EMISSION CONTROL SYSTEMS

CONTENTS

CAUTIONS ON INSPECTION **21**

COMPONENT LAYOUT AND VACUUM HOSE PIPING **16**

CRANKCASE EMISSION CONTROL SYSTEM **21**

EVAPORATIVE EMISSION CONTROL SYSTEM **22**

- Inspection of Canister 23
- Inspection of Overfill Limiter (Two-way Valve) 23
- Inspection of Purge Control System 22
- Inspection of Purge Control Valve (PCV) 23
- Inspection of Thermo Valve 23

EXHAUST EMISSION CONTROL SYSTEM **24**

- Inspection of Air-fuel Ratio Control (ECI Turbo) System 24
- Inspection of EGR Control Solenoid Valve 28
- Inspection of EGR Valve 27
- Inspection of Engine Coolant Temperature Sensor and Idle Switch 27
- Inspection of Exhaust Gas Recirculation (EGR) System 27
- Inspection of Secondary Air Cleaner 25
- Inspection of Secondary Air Control Solenoid Valve 26
- Inspection of Secondary Air Supply System 24
- Inspection of Three-way Catalytic Converter 24
- Inspection of Reed Valve 25

GENERAL INFORMATION **2**

SPECIFICATIONS **13**

- General Specifications 13
- Service Specifications 13
- Torque Specifications 13

TECHNICAL DESCRIPTION **5**

- Crankcase Emission Control System 5
- Evaporative Emission Control System 6
- Exhaust Emission Control System 7

TROUBLESHOOTING **14**

- Emission Control Device
- Engine Hesitates or Poor Acceleration
- Engine will not Start or is Hard to Start (Cranking possible)
- Excessive Oil Consumption
- Poor Fuel Mileage
- Rough Idle or Engine Stalls

GENERAL INFORMATION

N25BEBA

The emission control system has the following three major systems.

(1) Crankcase emission control system
(2) Evaporative emission control system
(3) Exhaust emission control system

The crankcase emission control system is a system adopting a closed-type crankcase ventilation to prevent blow-by gas from escaping into the atmosphere. The generated gas is instead led to the combustion chamber for combustion.

The evaporative emission control system for preventing loss of fuel vapor from the fuel system to the atmosphere consists of various components (a canister, purge control valve, 2-way valve and so on) which collect and lead generated fuel vapor to the combustion chamber for combustion.

The exhaust emission control system consists of an air-fuel ratio control unit (ECI system), three-catalyst converter, exhaust gas recirculation system, secondary air supply system and so on to reduce emissions of CO, HC and NOx.

ECI: Electronically Controlled Injection

ECI SYSTEM DIAGRAM – Without Intercooler

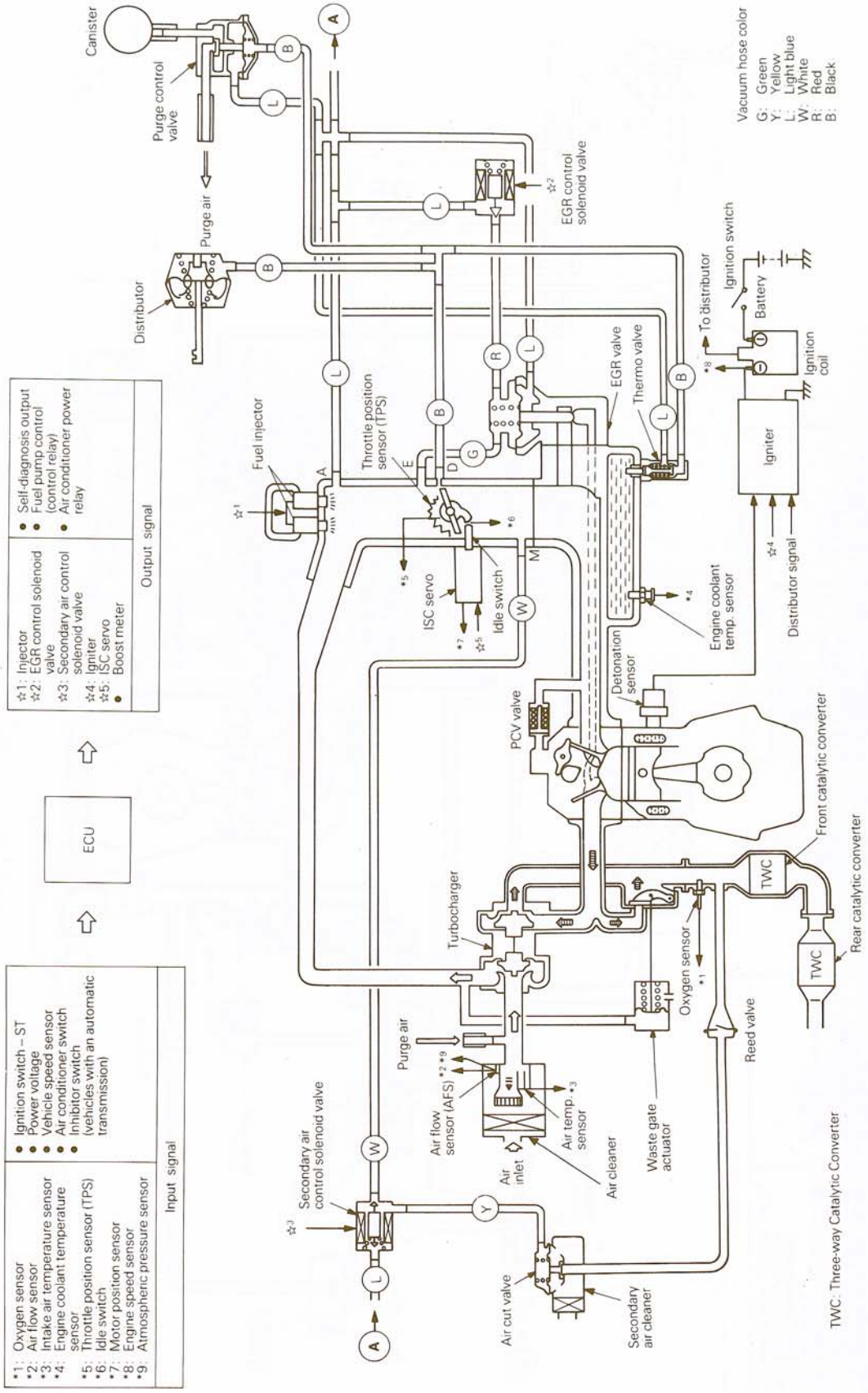

ECI662

STB Revision

ECI SYSTEM DIAGRAM – With Intercooler

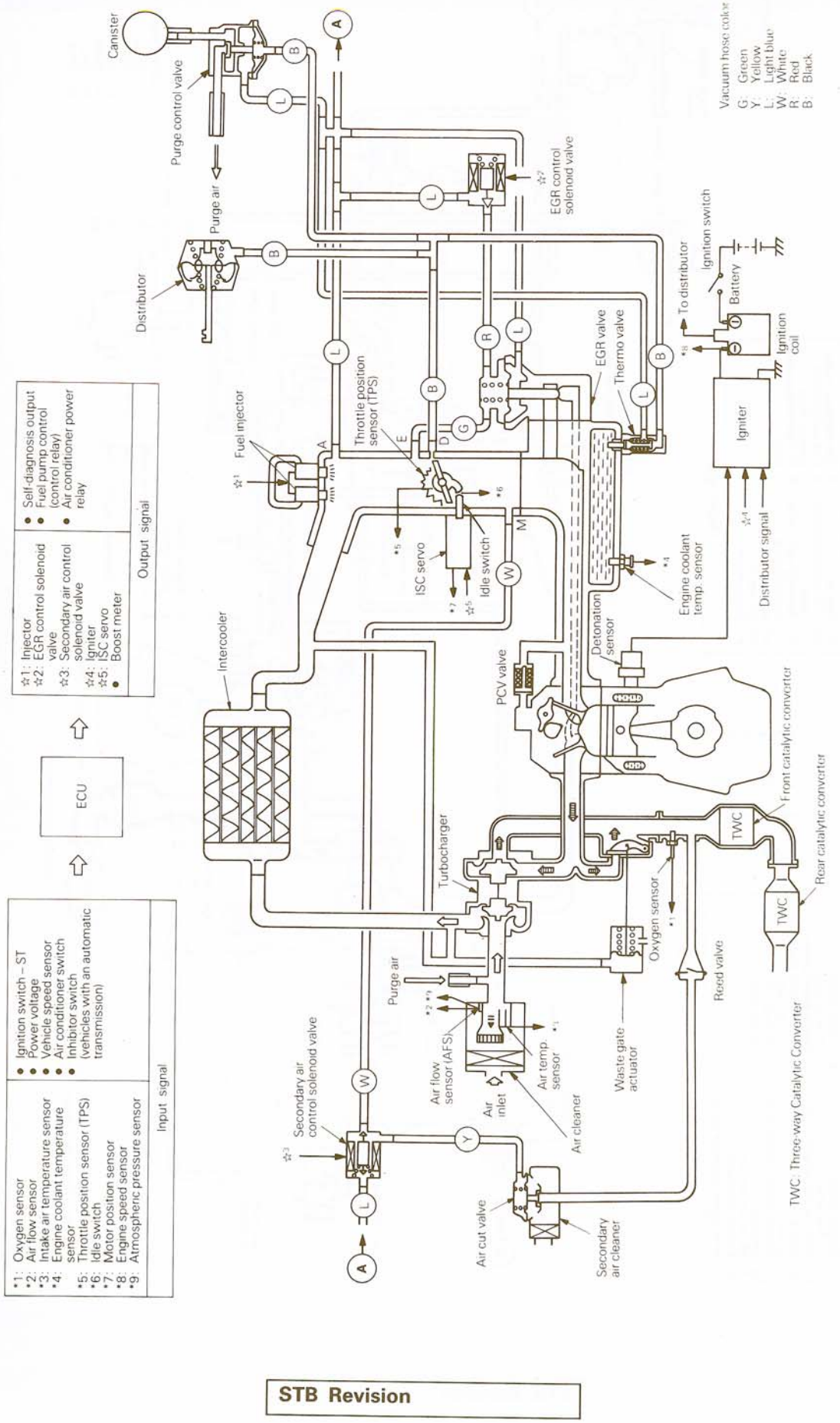

STB Revision

TECHNICAL DESCRIPTION

N25HAAA

CRANKCASE EMISSION CONTROL SYSTEM

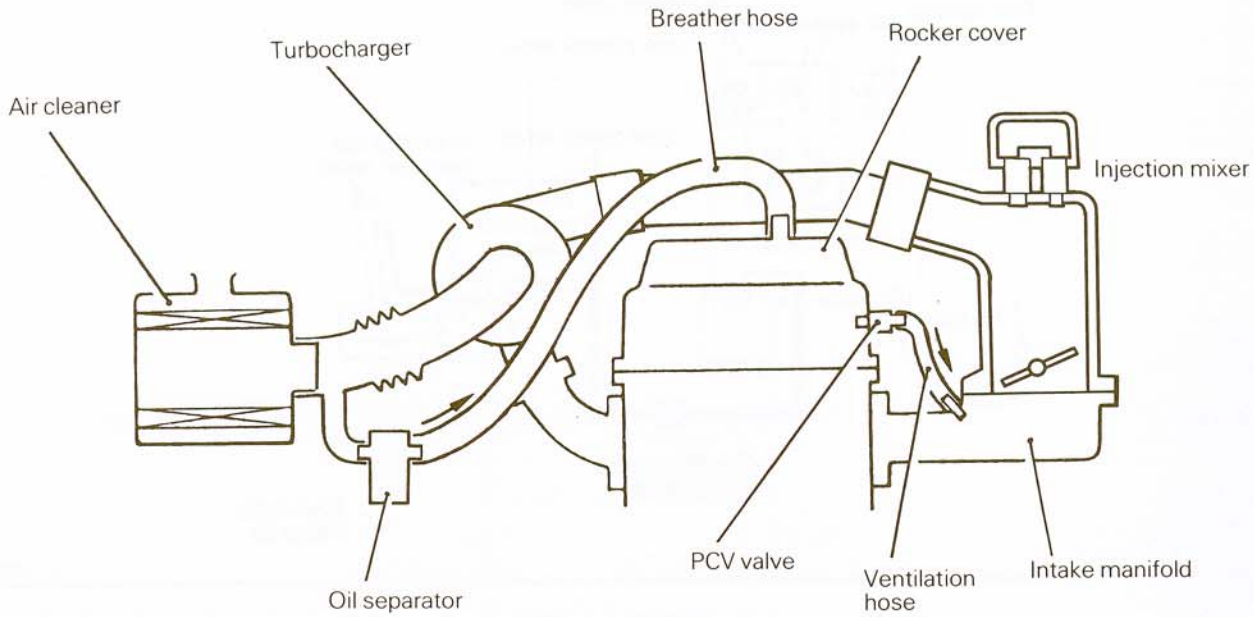

6EN121

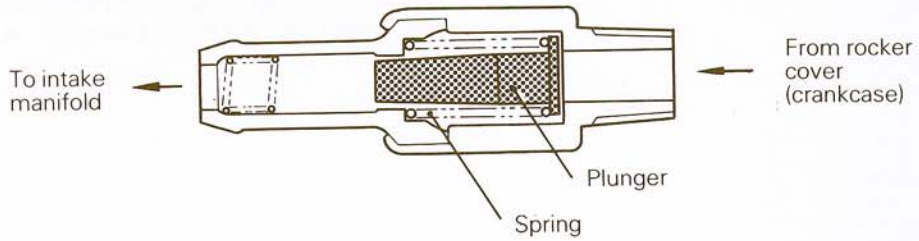

6EM122

A closed-type crankcase ventilation system is utilized to prevent the blow-by gas from escaping into the atmosphere. This system has a positive crankcase ventilation valve (PCV valve) at the rocker cover.

This system supplies fresh air to the crankcase through the air cleaner. Inside the crankcase, the fresh air is mixed with blow-by gases, and this mixture passes through the PCV valve into the intake manifold.

The PCV valve has a metered orifice through which the mixture of fresh air and blow-by gases is drawn into the intake manifold in response to the intake manifold vacuum. The valve capacity is adequate for all normal driving conditions.

EVAPORATIVE EMISSION CONTROL SYSTEM

N25HBAB

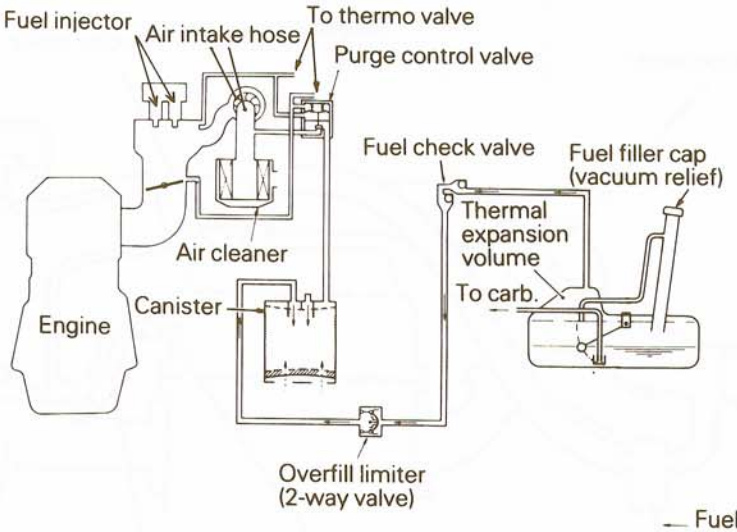

03U0045

In order to prevent the loss of fuel vapor from the fuel system into the atmosphere, the evaporative emission control system consists of charcoal canister, a purge control valve, etc.

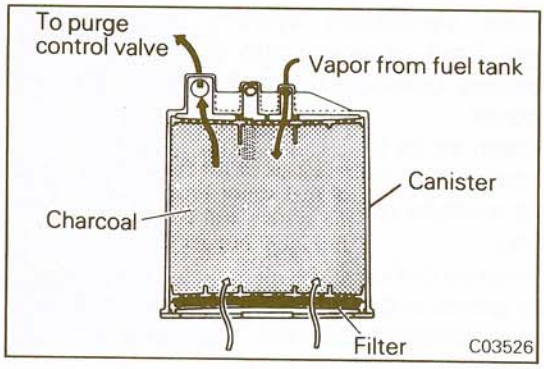

CANISTER

N25HBBB

While the engine is inoperative, fuel vapor generated inside the fuel tank is absorbed and stored in canister.
When the engine is running, the fuel vapor absorbed in canister is drawn into the air intake hose through the purge control valve.

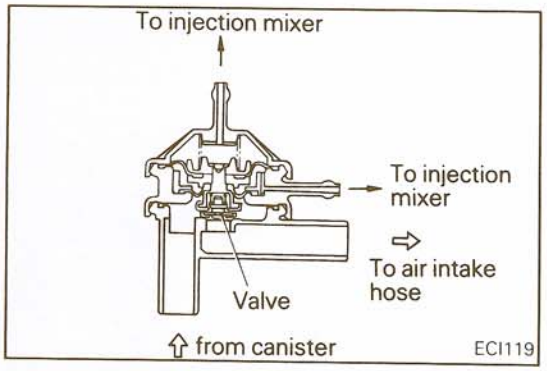

PURGE CONTROL VALVE

N25HBDB

The purge control valve is kept being closed during idling to prevent vaporized fuel from entering into the air intake hose for positive control of high-idle CO emission, which is a particular problem under high ambient temperature condition and once the throttle ported vacuum or turbocharged pressure working on the diaphragm of the valve exceeds the pre-set value, the purge control valve is opened.

STB Revision

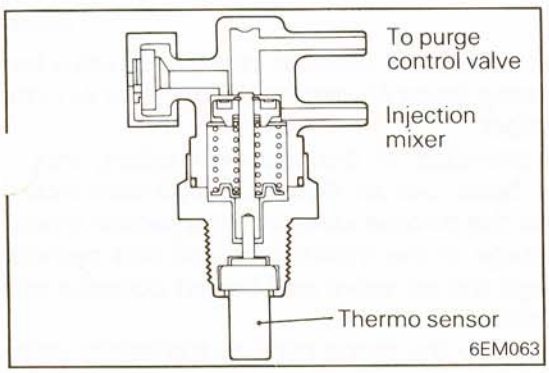

THERMO VALVE N25HBFA

The thermo valve, for sensing the engine coolant temperature at the intake manifold, closes the purge control valve when the engine coolant temperature is lower than the pre-set value in order to reduce CO and HC emissions under engine warm-up conditions, and opens the purge control valve when the engine coolant temperature is above the pre-set temperature.

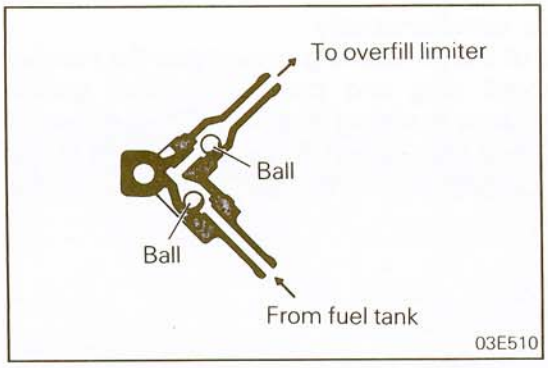

FUEL CHECK VALVE N25HBGA

The fuel check valve is used to prevent fuel leaks, should the car suddenly roll over. This valve is connected in the fuel vapor line (between fuel tank and overfill limiter) and is installed on the fuel tank.

The fuel check valve contains two balls as shown in the illustration. Under normal conditions, the gasoline vapor passage in the valve is opened, but if roll-over occurs one of the balls closes the fuel passage, thus preventing fuel leaks.

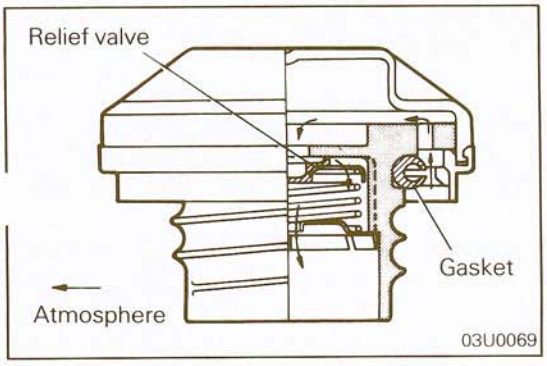

FUEL FILLER CAP N25HBHA

Fuel filler cap is equipped with relief valve to prevent the escape of fuel vapor into the atmosphere.

EXHAUST EMISSION CONTROL SYSTEM N25HCAC

Exhaust emissions (CO, HC, NOx) are controlled by a combination of engine modifications and the addition of special control components.

Modifications to the combustion chamber, intake manifold, camshaft, carburetor and ignition system form the basic control system.

Additional control devices include a jet air system, an exhaust gas recirculation (EGR) system, dual catalytic converters, a secondary air supply system, a dash pot, a heated air intake system and high altitude compensation system.

These systems have been integrated into a highly effective system which controls exhaust emissions while maintaining good driveability and fuel economy.

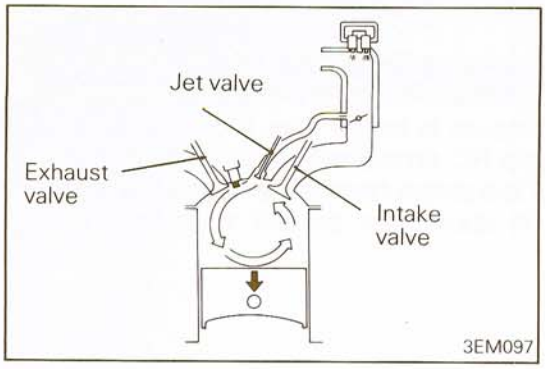

JET AIR SYSTEM

N25HCBB

In addition to the intake valve and exhaust valve, a jet valve has been provided for drawing jet air (super lean mixture or air) into the combustion chamber.
A jet air passage is provided in the injection mixer, intake manifold and cylinder head. Jet air flows through two intake openings provided near the throttle valve of the injection mixer, goes through the passage in the intake manifold and cylinder head, and flows through the jet valve and the jet opening into the combustion chamber.
The jet valve is actuated by the same cam as the intake valve and by a common rocker arm so that the jet valve and intake valve open and close simultaneously.
The jet air flowing out of the jet opening scavenges the residual gases around the spark plug and creates a good ignition condition. It also produces a strong swirl in the combustion chamber which continues throughout the compression stroke and improves flame propagation after ignition, assuring high combustion efficiency.

AIR-FUEL RATIO CONTROL SYSTEM [ELECTRONICALLY CONTROLLED INJECTION (ECI) SYSTEM]

N25HCCB

The ECI system uses oxygen sensor electric signals to control and drive the injector installed upstream of the throttle valve so as to accurately control the air-fuel ratio for minimizing emissions.
This in turn allows the engine to produce exhaust gases of the proper composition to permit the use of a three-way catalyst. The three-way catalyst is designed to convert the three pollutants (1) hydrocarbons (HC), (2) carbon monoxide (CO), and (3) oxides of Nitrogen (NOx) into harmless substances. There are two operating modes in the ECI system:

(1) Open Loop
Air fuel ratio is controlled by information programmed into the ECU at manufacture.

(2) Closed Loop
Air fuel ratio is varied by the ECU based on information supplied by the oxygen sensor.

NOTE
Refer to GROUP 14 FUEL SYSTEM – General Information for detailed description of the ECI system.

CATALYTIC CONVERTER

N25HCDB

Front catalytic converter

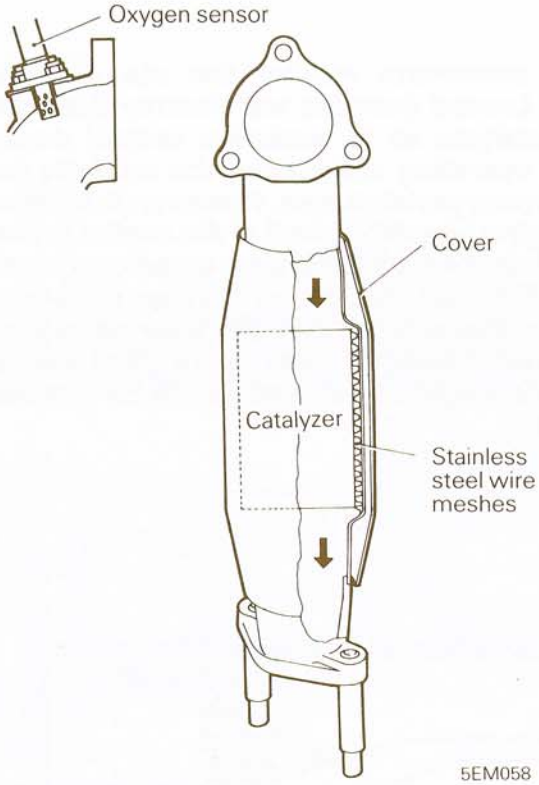

Rear catalytic converter

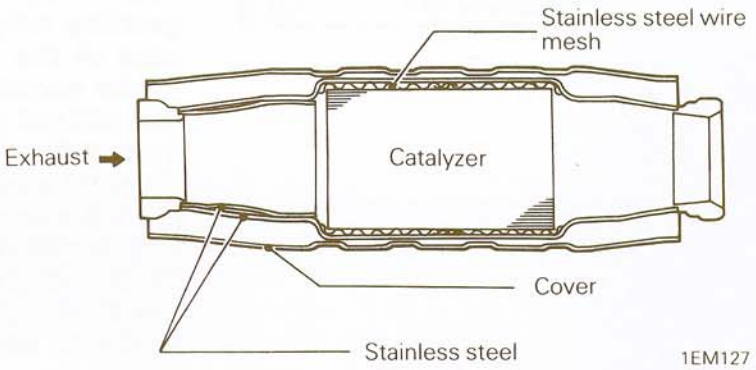

The three-way catalytic converters which are monolithic type with catalytic compositions applied to the integrally constructed honeycomb carrier surface are installed to the exhaust port of the turbocharger (front catalytic converter) and in the center of the exhaust pipe (rear catalytic converter). The converter, working in combination with the air-fuel ratio feedback control of the oxygen sensor, oxidizes CO and HC and reduces NOx.

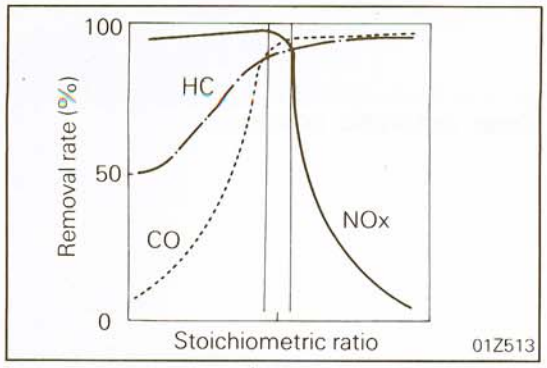

Function

The three-way catalytic converter removes CO, HC and NOx most effectively in the vicinity of the stoichiometric ratio. The air-fuel ratio feedback control by the oxygen sensor controls the air-fuel mixture to the stoichiometric ratio and t' catalytic converter promotes both oxidation and reduction o resultant exhaust gas to make it clean before it is released to atmosphere.

Caution

The catalytic converters require the use of unleaded gasoline only. Leaded gasoline will destroy the effectiveness of the catalysts as an emission control device.
Under normal operating conditions, the catalytic converters will not require maintenance. However, it is important to keep the engine properly tuned. If the engine is not kept properly tuned, engine misfiring may cause overheating of the catalysts. This may cause heat damage to the converters or vehicle components. This situation can also occur during diagnostic testing if any spark plug cables are removed and the engine is allowed to idle for a prolonged period of time.

SECONDARY AIR SUPPLY SYSTEM

N25HCED

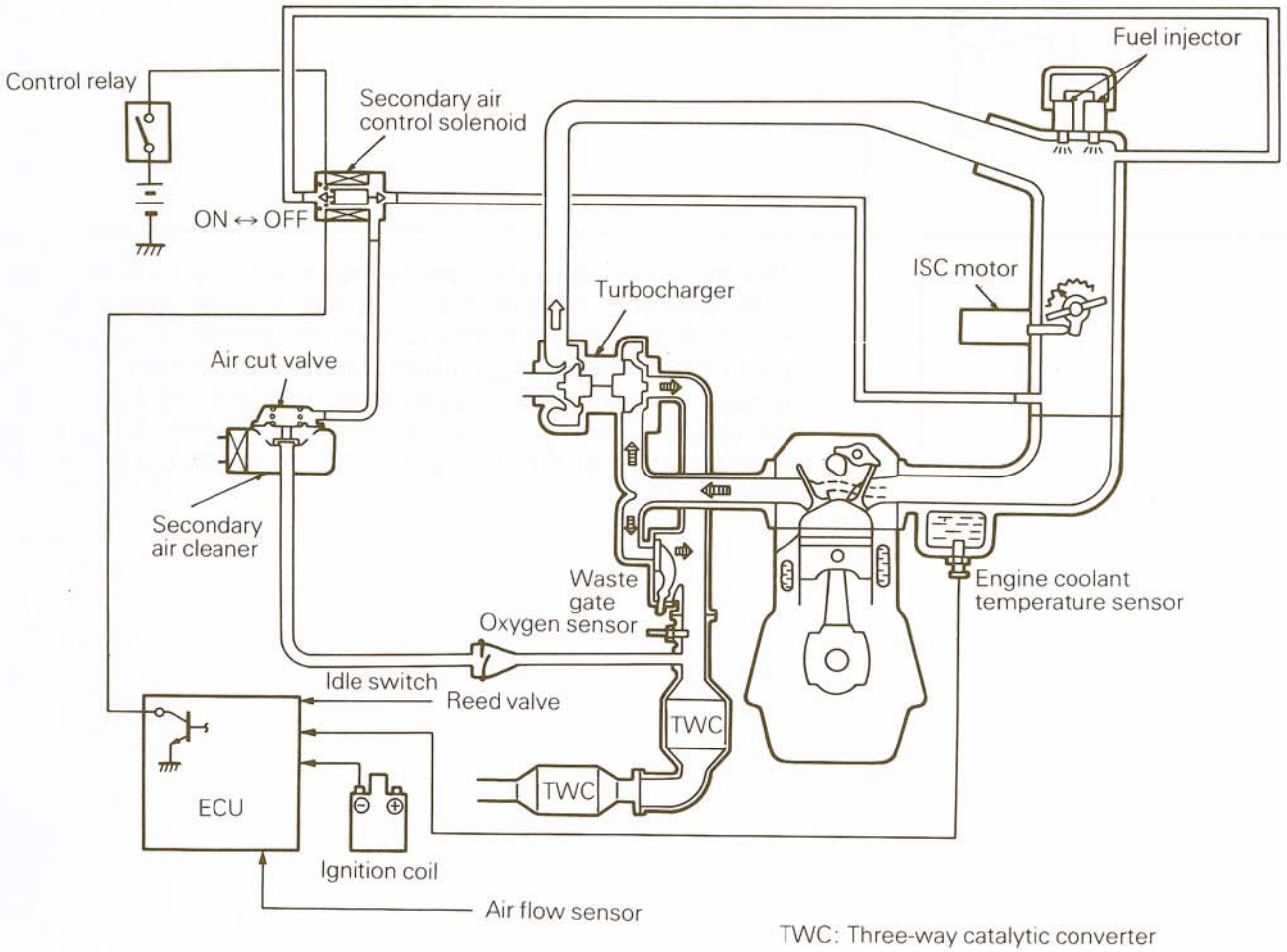

STB Revision

The reed valve supplies secondary air into the exhaust pipe for the purpose of promoting oxidation of exhaust emissions. The reed valve is actuated by exhaust vacuum being generated from pulsation in the exhaust manifold, and additional air is supplied into the exhaust manifold through the secondary air cleaner.

Contents of Control

When the engine coolant is cold [15 to 63°C (59 to 145°F)], when the engine is at idle, or when the vehicle is decelerating, the ECU turns on the power transistor to energize the secondary air control solenoid valve. As a result, the intake manifold vacuum is introduced to the air cut valve and the secondary air is supplied to the exhaust pipe.

EXHAUST GAS RECIRCULATION (EGR) SYSTEM

N25HCFB

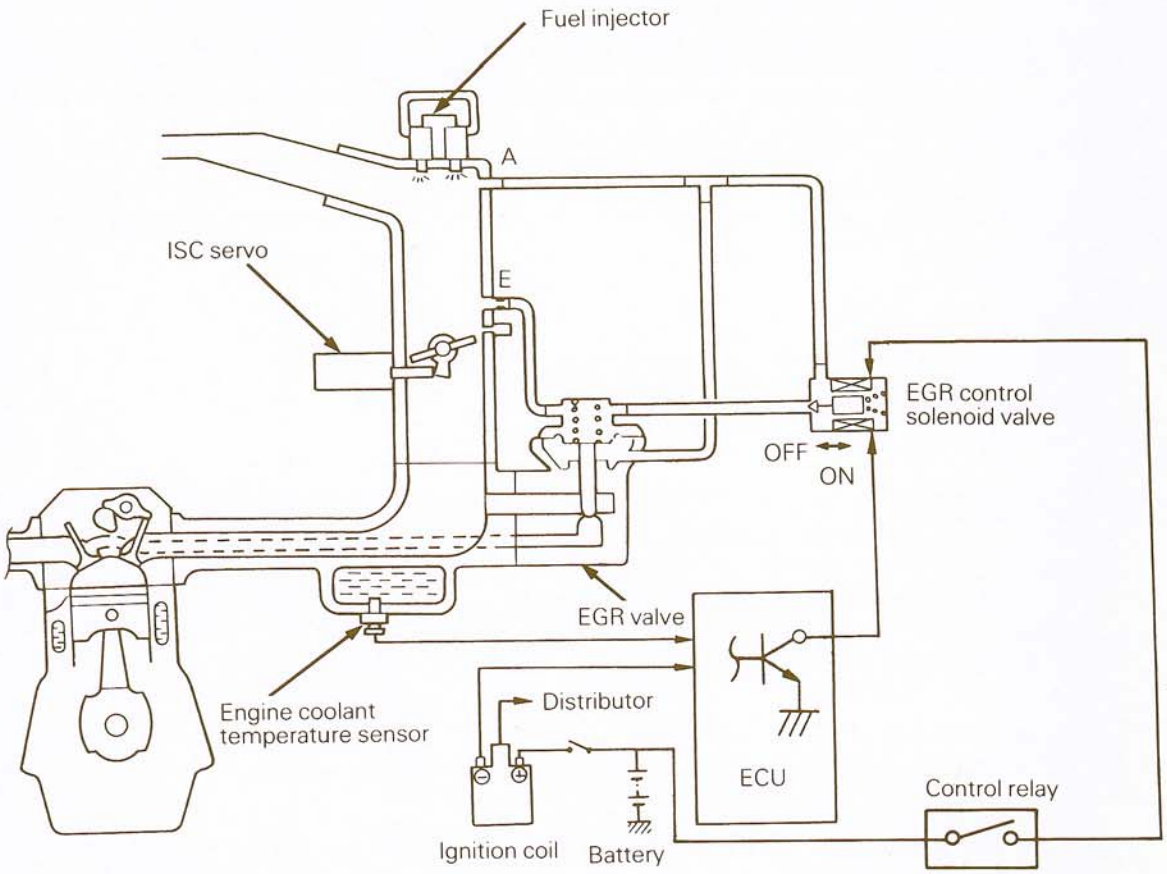

3EM147

Exhaust Gas Recirculation (EGR) system is designed to reduce oxides of nitrogen in the vehicle exhaust.
In this system, the exhaust gas is partially recirculated from an exhaust port at the cylinder head into a port located at the intake manifold while the EGR flow is controlled by an EG control valve, an EGR control solenoid valve, and an ECU.

Contents of Control

As the engine is warmed up and the engine coolant temperature rises [to 55°C (131°F) or higher] but the engine speed is low (approximately 3,500 rpm or less), the ECU turns off the power transistor so as to shut off current flowing to the EGR control solenoid valve. As a result, the mixing body E port vacuum acts on the EGR valve to open it.
At this time, the EGR flow rate is controlled by the E port vacuum. Namely during idling or wide throttle valve opening operation when the E port vacuum is low, the EGR valve is closed by the spring force so that EGR gas does not flow.

NOTE
During idling, the EGR gas is shut off to ensure stable idling operation.

SPECIFICATIONS

N25CA- -

GENERAL SPECIFICATIONS

ems	Specifications
Crankcase emission control system	
Positive crankcase ventilation (PCV) valve	Variable flow rate type (Purpose: Control of HC emission)
Evaporative emission control system	
Canister	Equipped
2-way valve	Equipped
Purge control valve (PCV)	Dual diaphragm type (Purpose: Control of HC emission)
Exhaust emission control system	
Jet air control combustion type	Jet swirl type (Purpose: Control of CO emission)
Air-fuel ratio control system – ECI TURBO system	Oxygen sensor feedback type (Purpose: Control of CO, HC, NOx emission)
Three-way catalytic converter	Dual monolithic type (Front and Rear CC) (Purpose: Control of CO, HC, NOx emission)
Secondary air supply system	
Reed valve	Reed type
Secondary air control solenoid valve	On-off solenoid valve
Secondary air cleaner	Separate type (Purpose: Control of CO, HC emission)
Exhaust gas recirculation system	
EGR valve	Single type
EGR control solenoid valve	On-off solenoid valve (Purpose: Control of NOx emission)

SERVICE SPECIFICATIONS

N25CB- -

Items	Specifications
Secondary air control solenoid valve coil resistance [at 20°C (68°F)] Ω	38 – 44
EGR control solenoid valve coil resistance [at 20°C (68°F)] Ω	38 – 44
Thermo valve opening temperature °C (°F)	60 (140)

TORQUE SPECIFICATIONS

N25CC- -

Items	Nm	ft.lbs.
Secondary air pipe reed valve side joint	50 – 70	37 – 52
Secondary air pipe exhaust manifold side joint	70 – 100	52 – 73
EGR valve attaching bolt	7 – 11	5 – 8
Thermo valve	20 – 40	15 – 30

TROUBLESHOOTING

N25EA--

Symptom	Probable cause	Remedy	Reference page
Engine will not start or is hard to start (Cranking possible)	EGR valve kept open	Repair or replace	25-27
	Vacuum hose disconnected or damaged	Repair or replace	–
Rough idle or engine stalls	EGR valve kept open	Repair or replace	25-27
	Vacuum hose disconnected or damaged	Repair or replace	–
	Faulty PCV valve	Replace	Refer to GROUP 0
	Purge control system faulty	Troubleshoot the system and check components under suspicion	25-22
Engine hesitates or poor acceleration	Exhaust gas recirculation system faulty	Troubleshoot the system and check each component under suspicion	25-27
Excessive oil consumption	Positive crankcase ventilation line clogged	Check positive crankcase ventilation system	Refer to GROUP 0
Poor fuel mileage	Exhaust gas recirculation system faulty	Troubleshoot the sytem and check components under suspicion	25-27

EMISSION CONTROL DEVICE

Emission control system / Allied parts	Crankcase emission control system	Evaporative emission control system	Jet air system	Air-fuel ratio control system	Three-way catalytic converter	Secondary air supply system	Exhaust gas recirculation system	Reference page for component check
PCV valve	X							Maintenance (GROUP 0)
Purge control valve		X						P.25-23
Thermo valve		X						P.25-23
Canister		X						–
Overfill limiter (2-way valve)		X						–
Jet valve			X					Engine (GROUP 9)
ECI system component				X		X	X	Fuel (GROUP 14)
Three-way catalytic converter					X			P.25-24
Secondary air cleaner						X		P.25-25
Reed valve						X		P.25-25
Secondary air control solenoid valve						X		P.25-26
EGR valve							X	P.25-27
EGR control solenoid valve							X	P.25-28

COMPONENT LAYOUT AND VACUUM HOSE PIPING

N25EA- -

COMPONENT LAYOUT

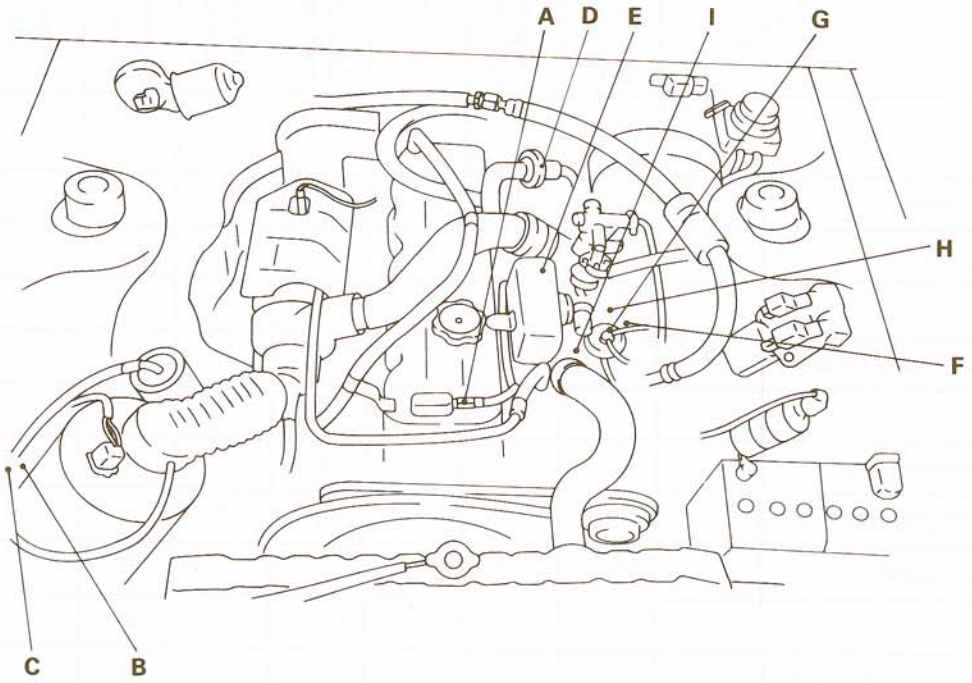

A	PCV valve	F	Secondary air control solenoid valve
B	Canister	G	EGR valve
C	Purge control valve	H	EGR control solenoid valve
D	Reed valve	I	Thermo valve
E	Secondary air cleaner		

5EM060

A PCV valve

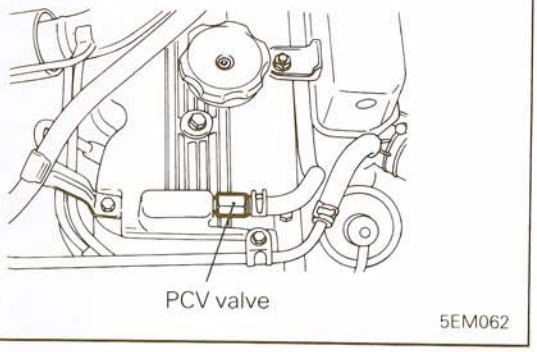

5EM062

B Canister

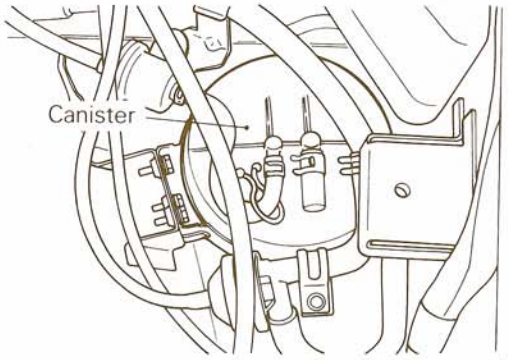

5EM063

STB Revision

C Purge control valve

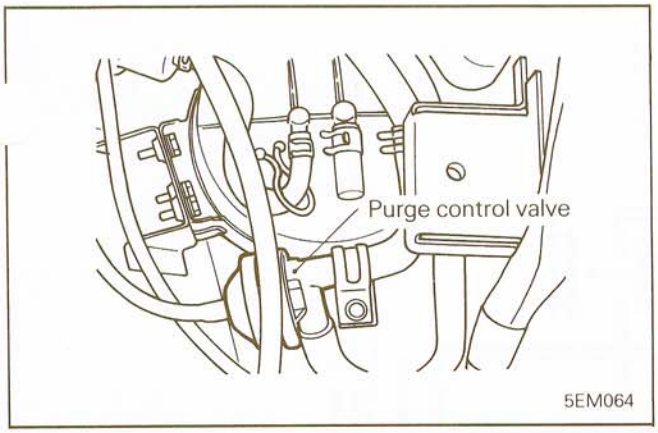

D Reed valve

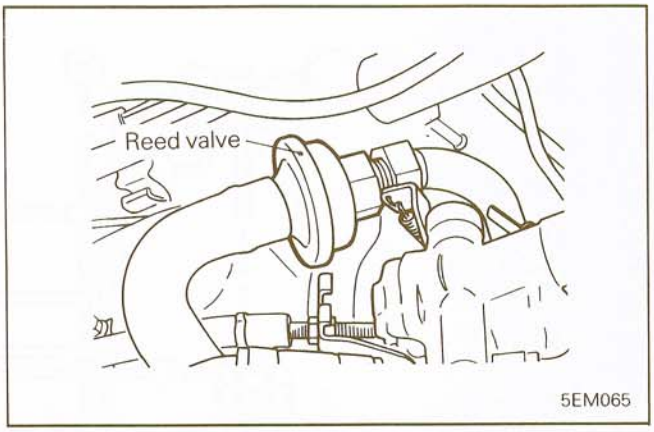

E Secondary air cleaner

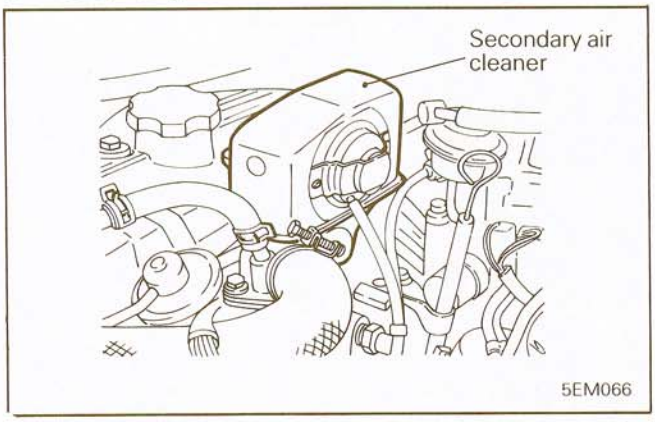

F Secondary air control solenoid valve

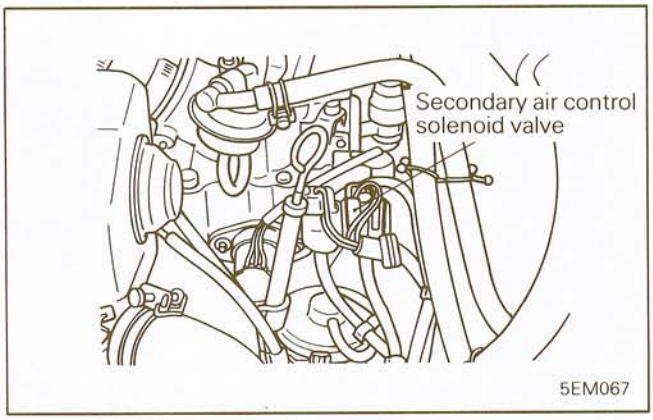

G EGR valve

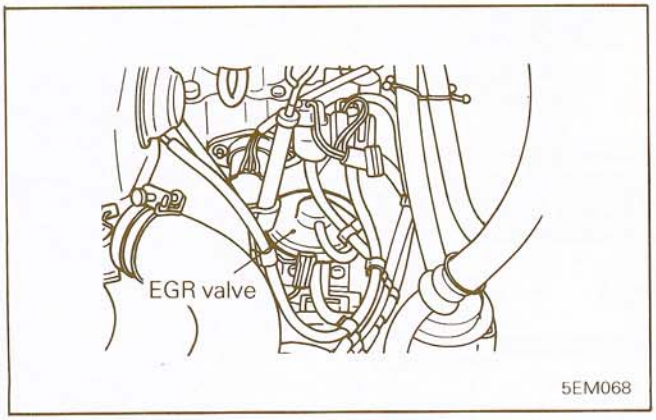

H EGR control solenoid valve

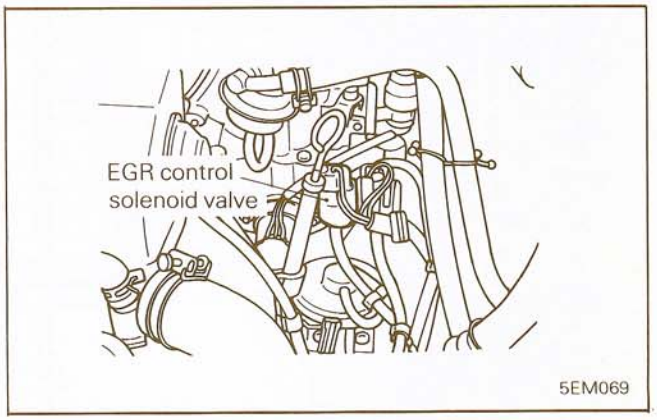

I Thermo valve

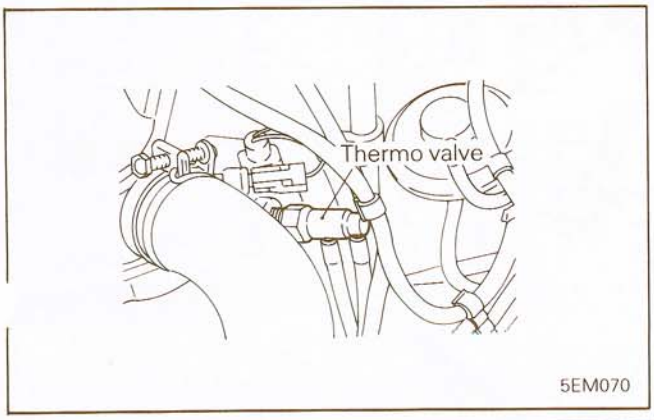

STB Revision

VACUUM HOSE PIPING – Without Intercooler

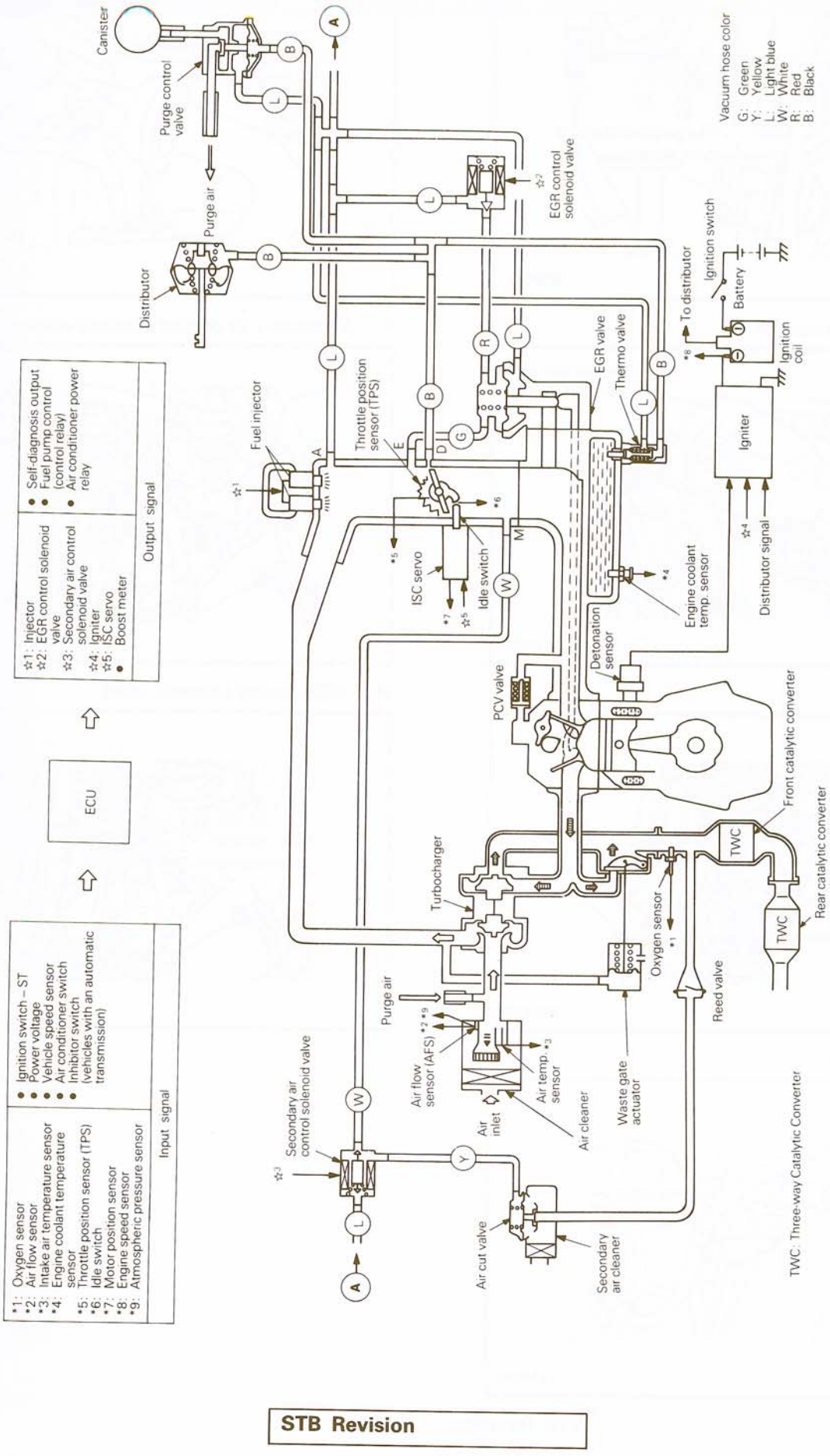

STB Revision

VACUUM HOSE PIPING – With Intercooler

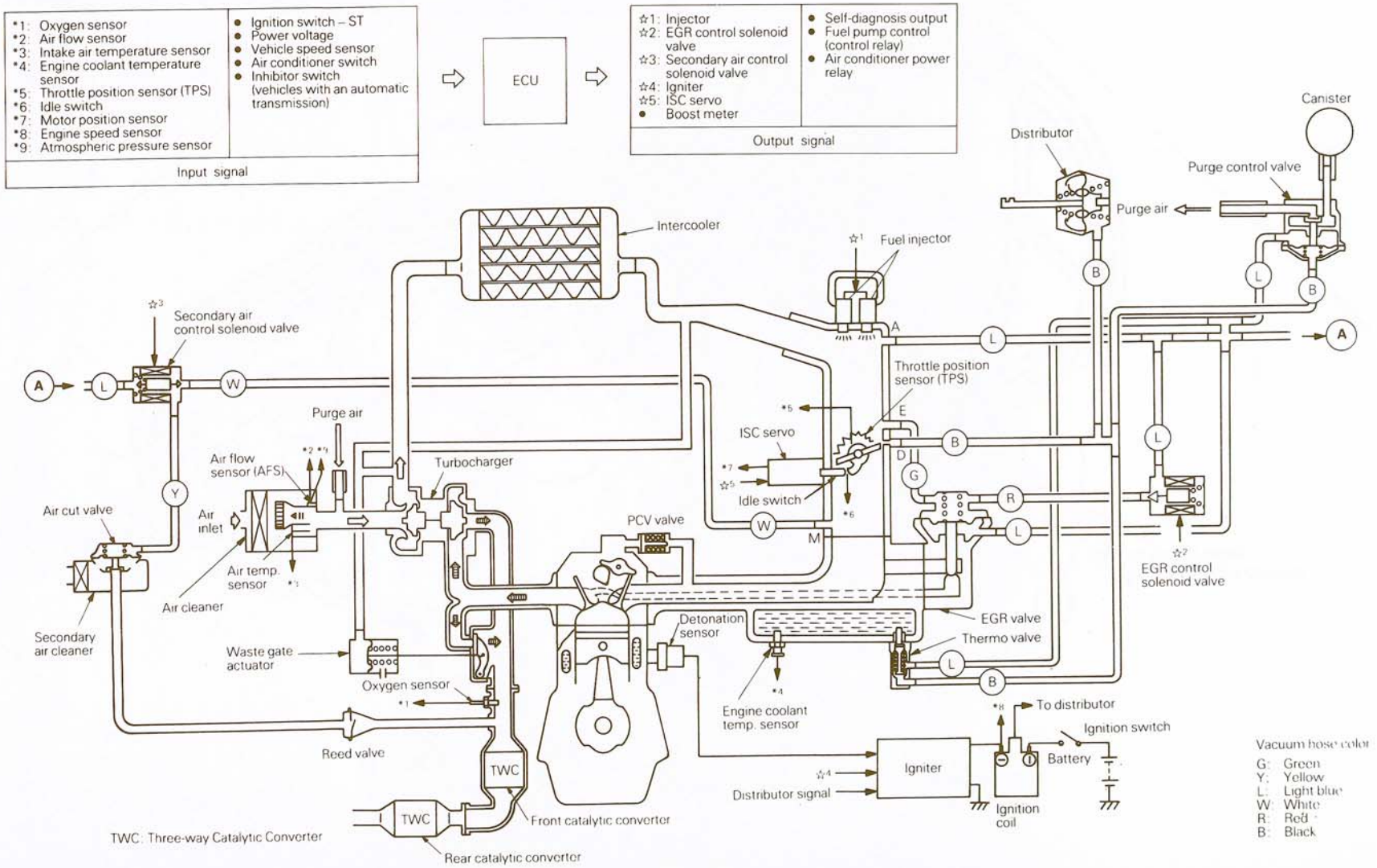

ECI663

STB Revision

Vacuum Hose Arrangement

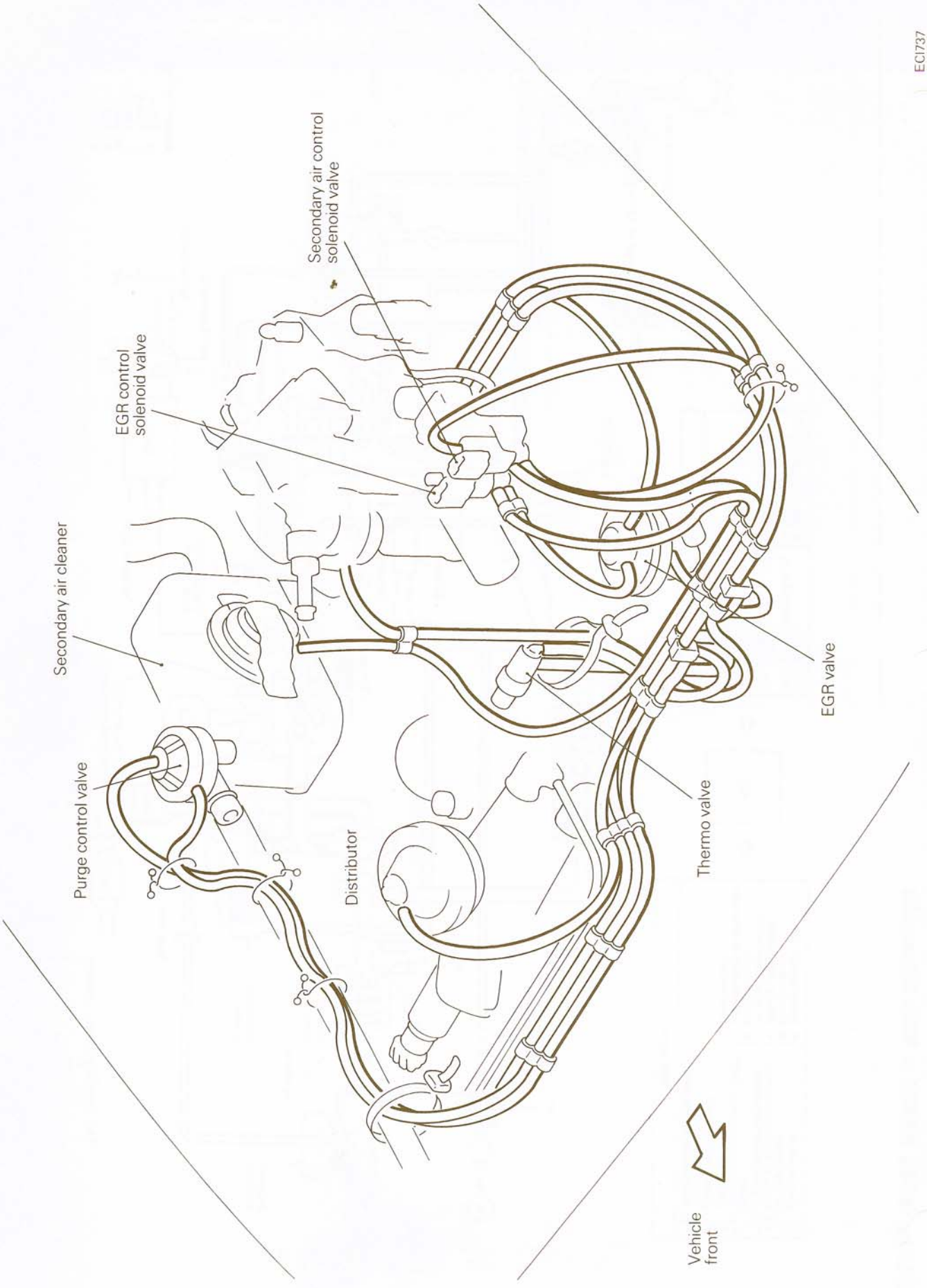

STB Revision

CAUTIONS ON INSPECTION

N25GALA

1. Adjust the engine before checking the system components.
2. Check hose connections (disengagement, looseness, etc.) and check for break, incorrect piping and damage.
3. Check hoses, pipes and ports for clogging and check hoses and pipes for cracks and damage.
4. When hoses are replaced, be sure to connect to original position (and in original direction).
5. After servicing, check piping connections referring to service label or service manual.

CRANKCASE EMISSION CONTROL SYSTEM

N25IAAA

INSPECTION OF POSITIVE CRANKCASE VENTILATION (PCV) VALVE

Refer to GROUP 0 LUBRICATION AND MAINTENANCE – Maintenance Service.

EVAPORATIVE EMISSION CONTROL SYSTEM

N25IBBB

INSPECTION OF PURGE CONTROL SYSTEM

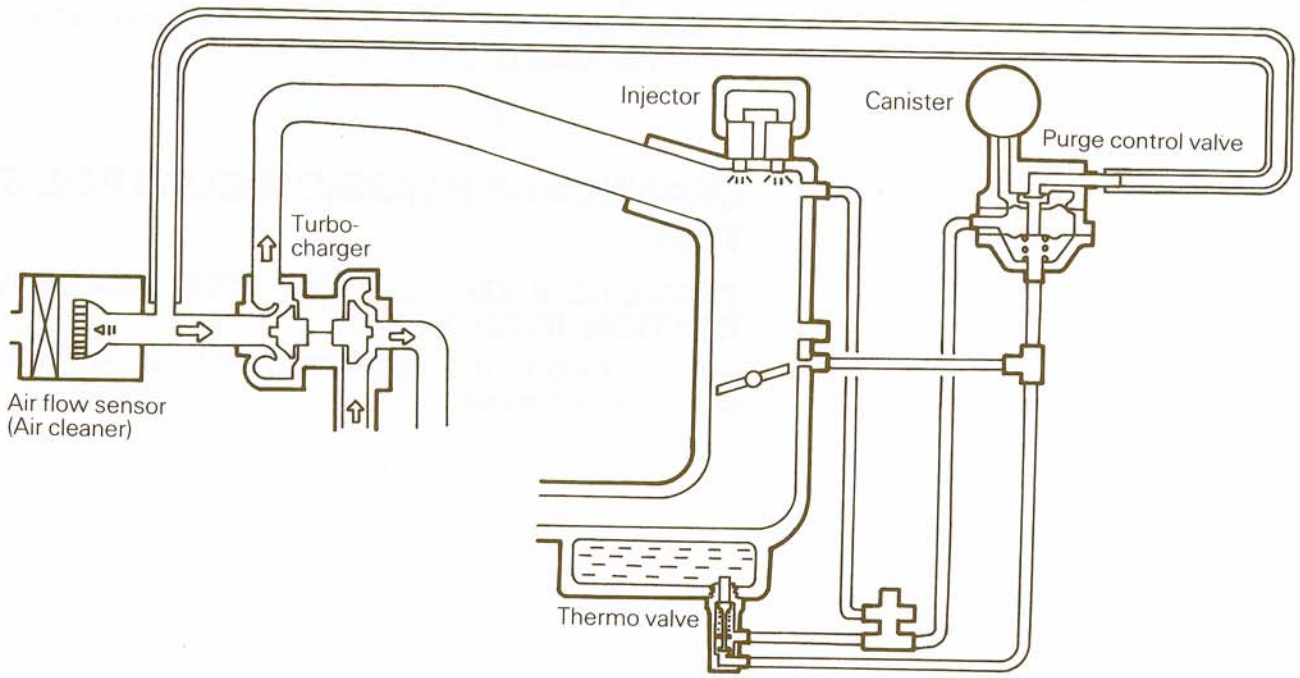

6EM112

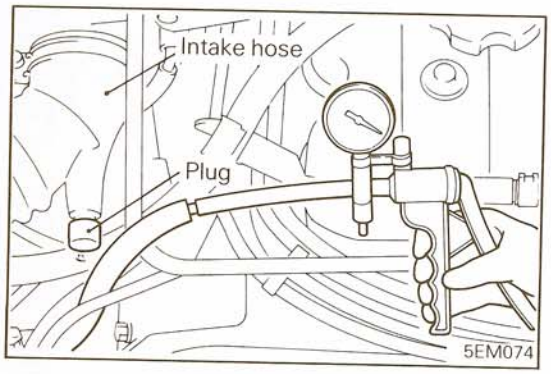

(1) Disconnect the purge air hose from the air intake hose and plug the air intake hose. Then, connect a hand vacuum pump to the disconnected purge air hose.
(2) Check the following both when the engine is cold [engine coolant temperature 45°C (113°F) or less] and when it is hot [engine coolant temperature 85 to 95°C (185 to 205°F)].

When engine is cold

Vacuum	Engine state	Normal condition
13 kPa (1.9 psi)	2,500 rpm	Vacuum is held

When engine is hot

Vacuum	Engine state	Normal condition
13 kPa (1.9 psi)	Idling	Vacuum is held
13 kPa (1.9 psi)	2,500 rpm	Vacuum leaks

STB Revision

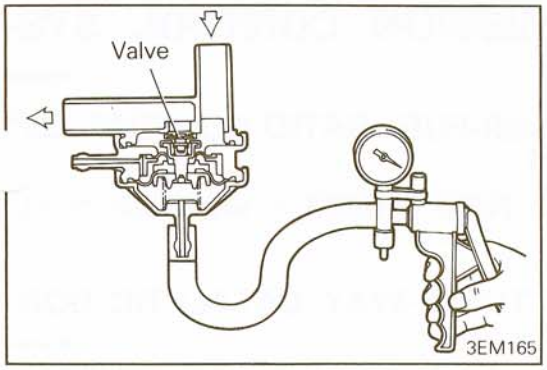

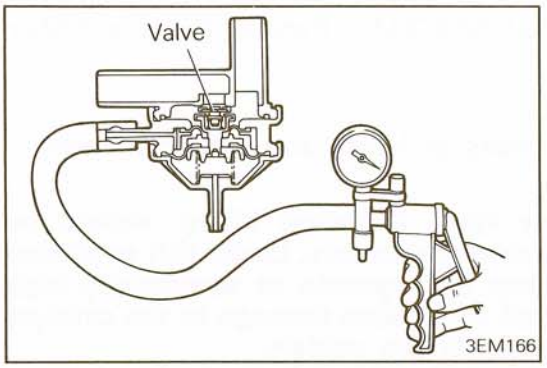

INSPECTION OF PURGE CONTROL VALVE (PCV)

N25IBCB

(1) Remove the purge control valve.
(2) Connect a hand vacuum pump to the vacuum nipple of the PCV.
(3) Apply a vacuum of 53 kPa (7.7 psi) and check air tightness.
(4) Blow in air lightly from the canister side nipple and check conditions as follows.

Hand vacuum pump vacuum	Normal condition
0 kPa (0 psi) (No vacuum is applied)	Air does not blow through
27 kPa (3.9 psi) or more	Air blows through

(5) Connect a hand vacuum pump to the positive pressure nipple of the PCV.
(6) Apply a vacuum of 53 kPa (7.7 psi) and check air tightness.

INSPECTION OF THERMO VALVE

N25IBDB

Caution

1. **When removing or installing the thermo valve, do not use wrenches or other tools on the resin part.**
2. **When installing, apply sealant (3M Nut Locking No. 4171 or equivalent) to the threads and tighten to 20 to 40 Nm (15 to 30 ft.lbs.).**
3. **When disconnecting the vacuum hose, put a mark on the hose so that it may be reconnected at original position.**

(1) Disconnect the vacuum hoses (black and blue stripe) from the thermo valve and connect a hand vacuum pump to the thermo valve.
(2) Apply vacuum and check thermo valve condition as follows.

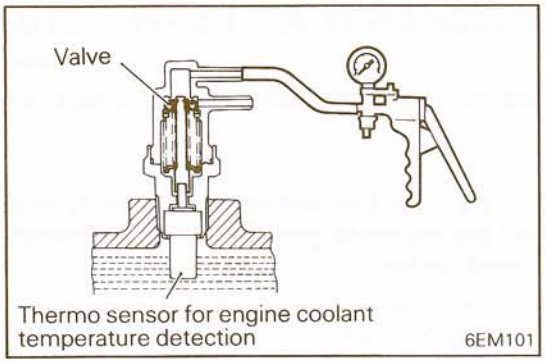

Engine coolant temperature	Normal condition
45°C (113°F) or less	Vacuum leaks
80°C (176°F) or more	Vacuum holds

INSPECTION OF OVERFILL LIMITER (TWO-WAY VALVE)

N25IBEA

INSPECTION OF CANISTER

Refer to GROUP 14 FUEL SYSTEM – Fuel Line and Vapor Line.

EXHAUST EMISSION CONTROL SYSTEM

N25ICAB

INSPECTION OF AIR-FUEL RATIO CONTROL (ECI TURBO) SYSTEM

Refer to GROUP 14 FUEL SYSTEM – Inspection of ECI System.

INSPECTION OF THREE-WAY CATALYTIC CONVERTER

N25ICBA

For removal and installation procedures, refer to GROUP 11 INTAKE AND EXHAUST SYSTEM – Exhaust Pipes and Main Muffler.

INSPECTION

Check for damage, cracks or fusion and replace if faulty.

Caution

1. **Operation of any type, including idling, should be avoided if engine misfiring occurs. Under this condition the exhaust system will operate at abnormally high temperature, which may cause damage to the catalyst or under-body parts of the vehicle.**
2. **Alteration or deterioration of ignition or fuel system, or any type of operating condition which results in engine misfiring must be corrected to avoid overheating the catalytic converters.**
3. **Proper maintenance and tuneup according to manufacturer's specifications should be made to correct the conditions as soon as possible.**

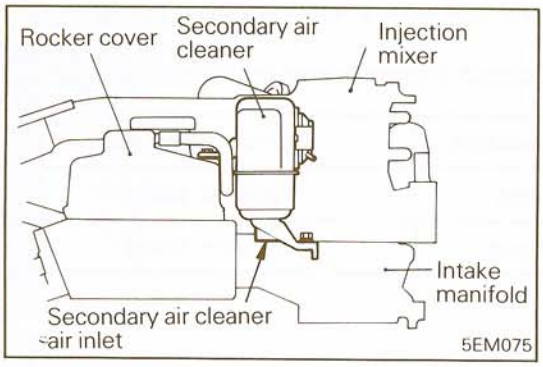

INSPECTION OF SECONDARY AIR SUPPLY SYSTEM

N25ICCC

Put a finger at the end of the extension hose to check air suction.

Caution

When a suction is felt by this inspection procedure, use care not to be sealded by exhaust gas flowing backward due to breakage of reed valve.

Engine coolant temperature	Engine state	Air suction
40 – 60°C (104 – 140°F)	Idling	Yes
70°C (158°F) or more		No
	Rapid deceleration from 4,000 rpm	Yes

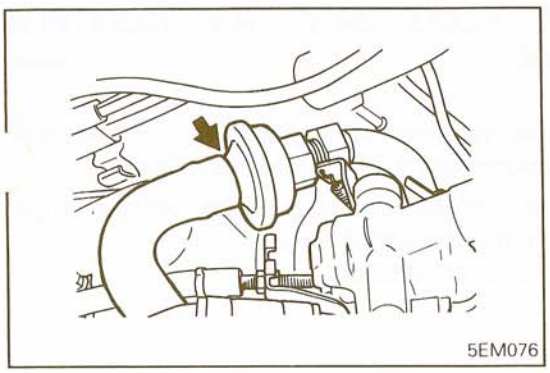

INSPECTION OF SECONDARY AIR CLEANER N25ICDB

(1) Disconnect the air hose from the reed valve.

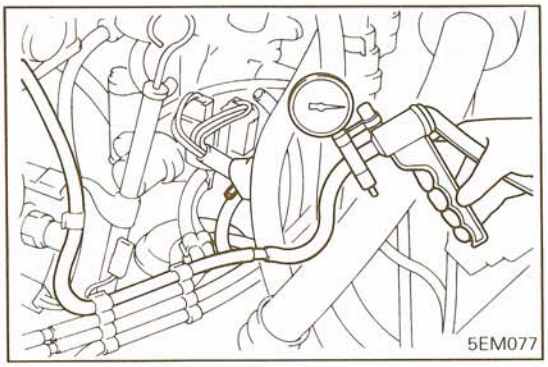

(2) Disconnect the vacuum hose (yellow stripe) from the secondary air control solenoid valve and connect a hand vacuum pump to the hose end.

(3) Apply a vacuum of 67 kPa (10.0 psi) and check air tightness.
(4) Blow in air from the end of the extension hose connected in step (1) and check condition as follows.

Hand vacuum pump vacuum	Normal condition
4 kPa (0.6 psi) or less	Air does not blow through
20 kPa (3.0 psi) or more	Air blows through

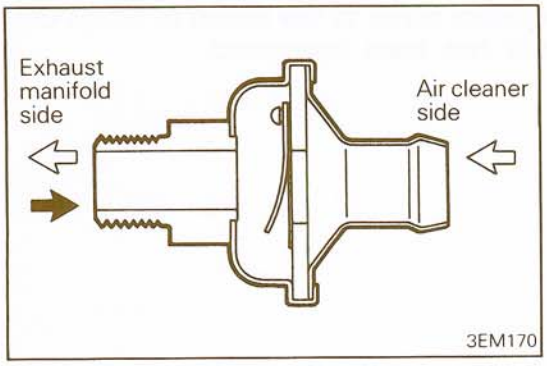

INSPECTION OF REED VALVE N25ICEA

(1) Remove the reed valve.
(2) Blow in air and check condition as follows.

Air blow direction	Normal condition
Air cleaner side to exhaust manifold side	Air blows through
Exhaust manifold side to air cleaner side	Air does not blow through

(3) If any fault is found in above checks, replace the reed valve.

Reed valve tightening torque:
50 – 70 Nm (37 – 52 ft.lbs.)

INSPECTION OF SECONDARY AIR CONTROL SOLENOID VALVE

N25ICGB

NOTE
When disconnecting the vacuum hose, put a mark on the hose so that it may be reconnected at original position.

(1) Disconnect the vacuum hoses (blue stripe, yellow stripe, white stripe) from the solenoid valve.
(2) Separate the harness connector.

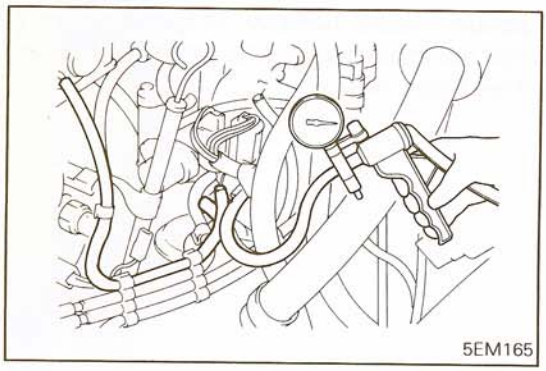
5EM165

(3) Connect a hand vacuum pump to the nipple to which white stripe vacuum hose has been connected.

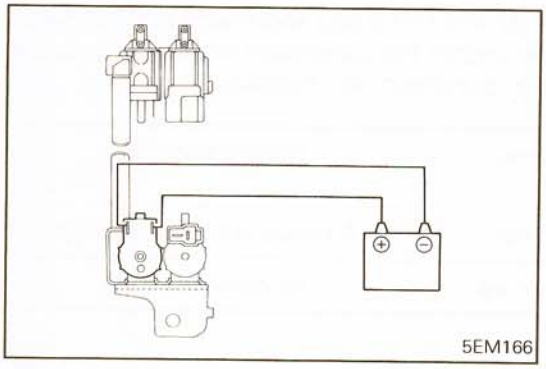
5EM166

(4) Apply vacuum and check air tightness both when the battery voltage is applied directly to the solenoid valve terminal and when not applied.

Battery voltage	Normal condition
When applied	Vacuum leaks
When not applied	Vacuum holds

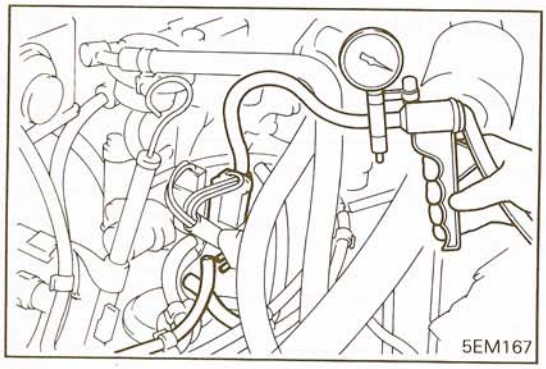
5EM167

(5) Connect a hand vacuum pump to the nipple to which blue stripe vacuum hose has been connected.

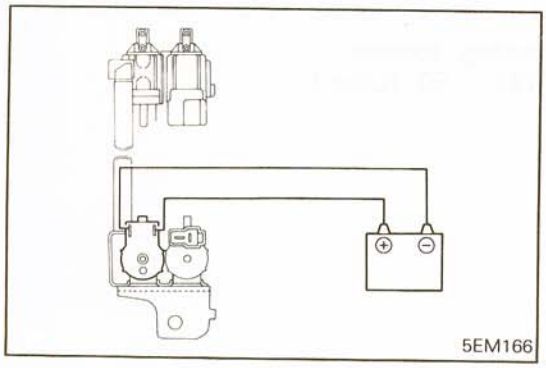
5EM166

(6) Apply vacuum and check air tightness both when the battery voltage is applied directly to the solenoid valve terminal and when not applied.

Battery voltage	Normal condition
When applied	Vacuum holds
When not applied	Vacuum leaks

STB Revision

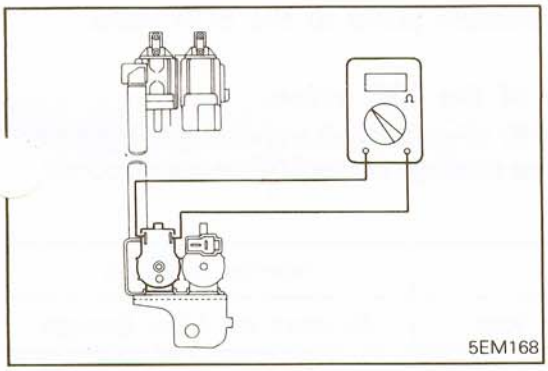

(7) Measure solenoid coil resistance.
Standard value: 38 – 44 Ω [at 20°C (68°F)]

INSPECTION OF ENGINE COOLANT TEMPERATURE SENSOR AND IDLE SWITCH N25ICHA

Refer to GROUP 14 FUEL SYSTEM – Inspection of ECI System Components.

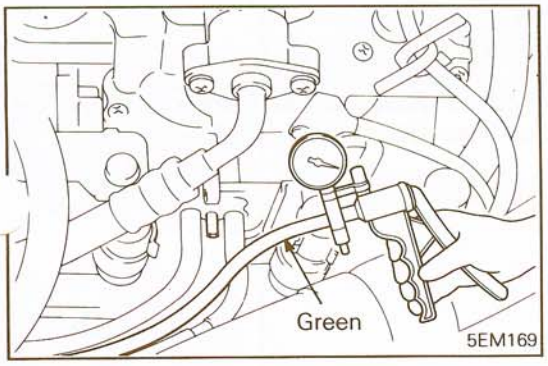

INSPECTION OF EXHAUST GAS RECIRCULATION (EGR) SYSTEM N25ICJB

(1) Disconnect the vacuum hose (green stripe) from the mixing body and connect a hand vacuum pump to the vacuum hose.
(2) Check the following both when the engine is cold [engine coolant temperature 50°C (122°F) or less] and when it is hot [engine coolant temperature 85 to 95°C (185 to 205°F)].

When engine is cold

Vacuum	Engine state	Normal condition
Apply vacuum	Idling	Vacuum leaks from EGR control solenoid valve

When engine is hot

Vacuum	Engine state	Normal condition
8 kPa (1.2 psi)	Idling	Vacuum holds
23 kPa (3.3 psi)	Stall or unstable idling condition	Vacuum holds

INSPECTION OF EGR VALVE N25ICKB

(1) Remove the EGR valve and check it for sticking, deposit of carbon, etc.
If such condition exists, clean with adequate solvent to ensure correct valve seat contact.

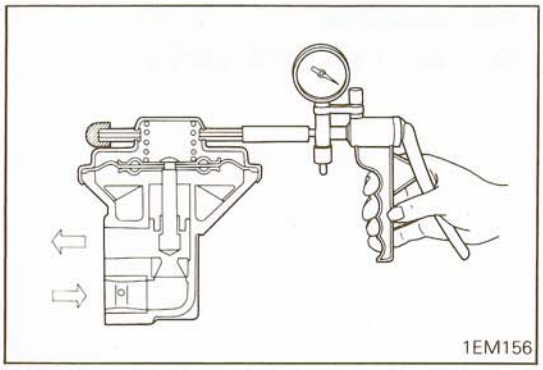
1EM156

(2) Connect a hand vacuum pump to the EGR valve.

Caution
Plug one nipple of the EGR valve.

(3) Apply a vacuum of 67 kPa (10.0 psi) and check air tightness
(4) Blow in air from one passage of the EGR to check condit as follows.

Vacuum	Normal condition
8 kPa (1.2 psi) or less	Air does not blow through
23 kPa (3.3 psi) or more	Air blows through

Caution
When installing the EGR valve, use a new gasket and tighten to 7 to 11 Nm (5 to 8 ft.lbs.).

INSPECTION OF EGR CONTROL SOLENOID VALVE

N25ICRA

NOTE
When disconnecting the vacuum hose, put a mark on the hose so that it may be reconnected at original position.

(1) Disconnect the vacuum hoses (blue stripe, red stripe) from the solenoid valve.
(2) Separate the harness connector.

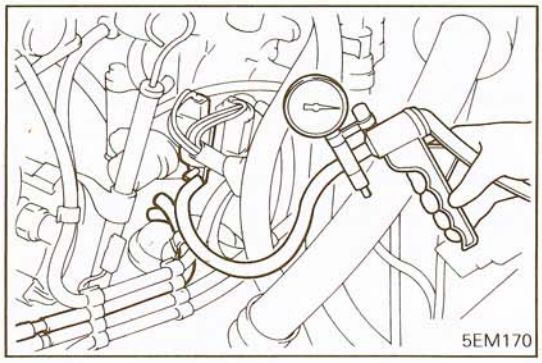
5EM170

(3) Connect a hand vacuum pump to the nipple to which red stripe vacuum hose has been connected.

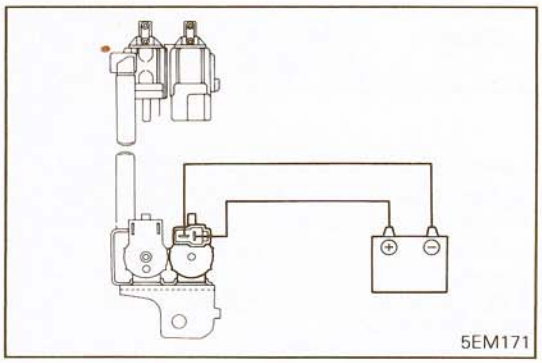
5EM171

(4) Apply vacuum and check air tightness both when the battery voltage is applied directly to the EGR control solenoid valve and when not applied.

Battery voltage	Normal condition
When applied	Vacuum leaks
When not applied	Vacuum holds

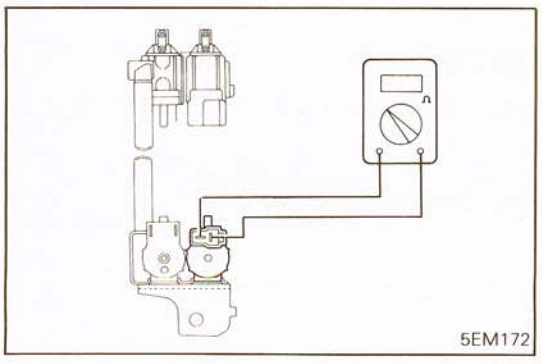
5EM172

(5) Measure solenoid coil resistance.
Standard value: 38 – 44 Ω [at 20°C (68°F)]

STB Revision

MSSP-001B-87

Printed in Japan